CITY OF NEW BRAUNFELS
KLEIN RD
RECONSTRUCTION PROJECT
S WALNUT AVE TO FM 725

60% DESIGN SUBMITTAL

City of NewBraunfels

NATHAN GARZA, CAPITAL PROJECTS MANAGER
550 LANDA STREET, NEW BRAUNFELS, TX 78130
830.221.4082

CITY COUNCIL

MAYOR AT LARGE	BARRON CASTEEL
DISTRICT 1	GEORGE GREEN
DISTRICT 2	JUSTIN MEADOWS
DISTRICT 3	RON REAVES
DISTRICT 4	CHRIS MONCEBALLEZ
DISTRICT 5/MAYOR PRO TEM	WAYNE PETERS
DISTRICT 6	LEAH A. GARCIA

CITY MANAGER
ROBERT CAMARENO

DESIGN SPEED - 40 MPH

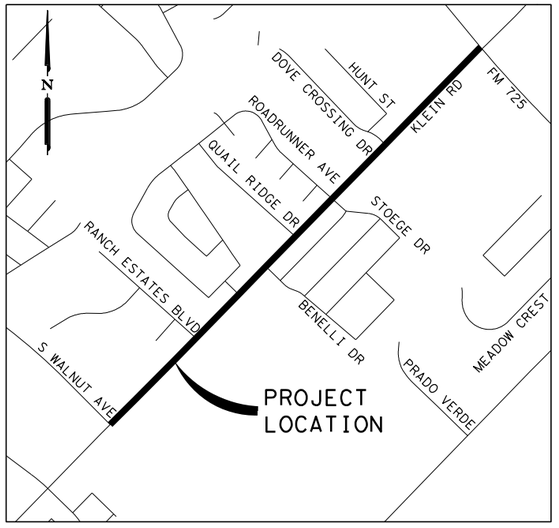

LOCATION MAP
SCALE: NOT TO SCALE

PAPE-DAWSON ENGINEERS

SAN ANTONIO | AUSTIN | HOUSTON | FORT WORTH | DALLAS
2000 NW LOOP 410 | SAN ANTONIO, TX 78213 | 210.375.9000
TBPE FIRM REGISTRATION #470 | TBPLS FIRM REGISTRATION #10028800

INTERIM REVIEW
DOCUMENT INCOMPLETE. NOT INTENDED FOR PERMIT, BIDDING OR CONSTRUCTION.
ENGINEER: JOHN A. TYLER
P.E. SERIAL NO: 105193
DATE: 1/10/2020

BY THE ACT OF SUBMITTING A BID FOR THIS PROPOSED CONTRACT, THE BIDDER WARRANTS THAT THE BIDDER, AND ALL SUBCONTRACTORS AND MATERIAL SUPPLIERS HE INTENDS TO USE HAVE CAREFULLY AND THOROUGHLY REVIEWED THE DRAWINGS, SPECIFICATIONS AND ALL OTHER CONTRACT DOCUMENTS AND HAVE FOUND THEM COMPLETE AND FREE FROM AMBIGUITIES AND SUFFICIENT FOR THE PURPOSE INTENDED. THE BIDDER FURTHER WARRANTS THAT TO THE BEST OF HIS OR HIS SUBCONTRACTOR'S AND MATERIAL SUPPLIERS' KNOWLEDGE, ALL MATERIALS AND PRODUCTS SPECIFIED OR INDICATED HEREIN ARE ACCEPTABLE FOR ALL APPLICABLE CODES AND AUTHORITIES.

THE LOCATION OF ALL EXISTING UTILITIES SHOWN ON THESE PLANS HAS BEEN BASED UPON RECORD INFORMATION ONLY AND MAY NOT MATCH LOCATION AND/OR DEPTHS AS CONSTRUCTED. THE CONTRACTOR SHALL CONTACT EACH OF THE INDIVIDUAL UTILITIES FOR ASSISTANCE IN DETERMINING EXISTING LOCATION AND DEPTHS PRIOR TO BEGINNING AND CONSTRUCTION. CONTRACTOR SHALL FIELD VERIFY LOCATIONS OF ALL EXISTING UTILITY CROSSING'S PRIOR TO BEGINNING CONSTRUCTION.

ALL RESPONSIBILITY FOR THE ADEQUACY OF THESE PLANS REMAINS WITH THE ENGINEER OF RECORD. IN ACCEPTING THESE PLANS, THE CITY OF NEW RAINFALLS MUST RELY UPON THE ADEQUACY OF THE WORK OF THE ENGINEER OF RECORD.

IF CONSTRUCTION HAS NOT COMMENCED WITHIN ONE-YEAR OF CITY APPROVAL FOR CONSTRUCTION INSPECTION, THAT APPROVAL IS NO LONGER VALID.

GAS UTILITIES ARE NOT INCLUDED IN THE CIVIL CONSTRUCTION PLANS. NO GAS IMPROVEMENTS PROPOSED.

JOB NO. NB 18-026 CITY OF NEW BRAUNFELS
KLEIN RD RECONSTRUTION PROJECT

Design Filename: H:\Projects\510\30\03\Design\Civil\General\5103003tsh.dgn

Plotted on: 1/9/2020

Design Filename: H:\Projects\510\30\03\Design\Civil\General\510300301nd01.dgn

SHEET NO.		DESCRIPTION
		GENERAL
1		COVER SHEET
2		INDEX OF SHEETS
3-13		GENERAL NOTES
14		ESTIMATE AND QUANTITY
15-21		SUMMARIES
22		PROJECT LOCATION MAP
23		EXISTING TYPICAL SECTIONS
24-27		PROPOSED TYPICAL SECTIONS
28-36		DEMOLITION PLAN
		TEMPORARY TRAFFIC CONTROL PLAN
37		TRAFFIC CONTROL PLAN OVERALL PHASING LAYOUT
38		TRAFFIC CONTROL PLAN NARRATIVE AND SPECIAL NOTES
39		TRAFFIC CONTROL PLAN PROJECT ADVANCED WARNING SIGNS
40		TRAFFIC CONTROL PLAN DETOUR MAP
41-46		TRAFFIC CONTROL PLAN PHASE 1 STEP 1
47-50		TRAFFIC CONTROL PLAN PHASE 1 STEP 2
51-69		TRAFFIC CONTROL PLAN PHASE 2 STEP 1
70-88		TRAFFIC CONTROL PLAN PHASE 2 STEP 2
89-92		TRAFIC CONTROL PLAN PHASE 3
93-104	*	(BC (1-12)-14) BARRICADE AND CONSTRUCTION STANDARDS
105	*	(TCP(2-3)-18) TRAFFIC CONTROL PLAN TRAFFIC SHIFTS ON TWO-LANE ROADS
106	*	(TCP(2-4)-18) TRAFFIC CONTROL PLAN TRAFFIC LANE CLOSURES ON MULTILANE CONVENTIONAL ROADS
107	*	(TCP(2-5)-18) TRAFFIC CONTROL PLAN LONG TERM LANE CLOSURES MULTILANE CONVENTIONAL RDS.
108	*	(TCP(3-1)-13) TRAFFIC CONTROL PLAN MOBILE OPERATIONS UNDIVIDED HIGHWAYS
109	*	(WZ(STPM)-13) WORK ZONE SHORT TERM PAVEMENT MARKINGS
110	*	(WZ(UL)-13 SIGNING FOR UNEVEN LANES
111	*	(WZ(RCD)-13) WORK ZONE ROAD CLOSURE DETAILS
112-113	*	(WZ(BTS-1 - BTS-2)-13) TRAFFIC SIGNAL WORK STANDARDS
		ROADWAY
114-115		HORIZONTAL AND VERTICAL CONTROL
116		HORIZONTAL ALIGNMENT DATA SHEET
117-142		ROADWAY PLAN & PROFILE
143		CHANNEL GRADING LAYOUT
144		MISCELLANEOUS DRIVEWAY DETAILS
145-151		MISCELLANEOUS DETAILS
152		MISCELLANEOUS CONSTRUCTION STANDARDS
153	*	(TE(HMAC)-11) TAPERED EDGE DETAILS HMAC PAVEMENT
154-157	*	(PED-18) PEDESTRIAN FACILITIES
158-160	*	(PRD-13) PEDESTRIAN HANDRAIL DETAILS
161	*	(TRB-15(1)) TREE AND BRUSH REMOVAL
162	*	(GF(31)-19) METAL BEAM GUARD FENCE TL-3 MASH COMPLIANT
163	*	(GF(31)TRTL2-19) METAL BEAM GUARD FENCE THRIE-BEAM TRANSITION TL-2 MASH COMPLIANT
164	*	(GF(31) MS-19) METAL BEAM GUARD FENCE (MOW STRIP) TL-3 MASH COMPLIANT
165	*	(BED-14) BRIDGE END DETAILS
166	*	(SGT(12S)31-18) SINGLE GUARDRAIL TERMINAL MSKT-MASH-TL-3
		TRAFFIC
167-175		SIGNING AND PAVEMENT MARKING
176		EXISTING TRAFFIC SIGNAL SHEET
177		TEMPORARY TRAFFIC SIGNAL LAYOUT PHASE 2 STEP 1
178		TEMPORARY TRAFFIC SIGNAL LAYOUT PHASE 2 STEP 2
179		PROPOSED TRAFFIC SIGNAL SHEET
180		CONDUIT & CONDUCTOR SCHEDULE
181	*	(PM(1)-12) TYPICAL STANDARD PAVEMENT MARKINGS
182	*	(PM(2)-12) TYPICAL STANDARD PAVEMENT MARKINGS
183	*	(PM(3)-12) TYPICAL STANDARD PAVEMENT MARKINGS
184	*	(BLPM-10) BICYCLE LANE PAVEMENT MARKINGS
185	*	(SMD (GEN)-08) SIGN MOUNTING DETAILS SMALL ROADSIDE SIGNS GENERAL NOTES & DETAILS
186	*	(SMD(TWT)-08) SIGN MOUNTING DETAILS SMALL ROADSIDE SIGNS
187	*	(MB-15(1)) MAILBOX MOUNTING AND SPACING
188	*	(MB-15(1)) MAILBOX BRACKET CONNECTION DETAILS
189	*	(MB-15(1)) MAILBOX SUPPORT AND FOUNDATION
190	*	(MB-15(1)) MAILBOX DHT NUMBERS TABLE
191-193	*	(MB-14(2-2B)) MAILBOX SIDE ROAD PLACEMENT AND TURNOUTS
		DRAINAGE
194-195		HYDRAULIC DATA SHEETS
196-197		DRAINAGE AREA MAP SYSTEM A
198		DRAINAGE AREA MAP SYSTEM B
199-200		STORM DRAIN COMPUTATION SYSTEM A
201		STORM DRAIN COMPUTATION SYSTEM B
202		DRAINAGE NOTES
203-219		DRAINAGE PLAN & PROFILE
220-225		STORM DRAIN LATERALS
226		MISCELLANEOUS DETAILS
227	*	(SCP-MD) PRECAST MISCELLANEOUS DETAILS
228	*	(SCP-5) SINGLE BOX CULVERTS PRECAST (5'-0" SPAN)
229	*	(BCS) BOX CULVERT SUPPLEMENT WINGS AND END TREATMENTS
230	*	(PW-0) CONCRETE WINGWALLS WITH PARALLEL WINGS
231	*	(CH-PW-0) CONCRETE HEADWALLS WITH PARALLEL WINGS
232	*	(SETP-PD) SAFETY END TREATMENT
233	*	(PB) PRECAST BASE
234	*	(PBGC) PIPE AND BOX GROUTED CONNECTIONS FOR PRECAST STRUCTURES

SHEET NO.		DESCRIPTION
		DRAINAGE CONTINUED
235	*	(PJB) PRECAST JUNCTION BOX
236	*	(PDD) DESIGN DATA FOR PRECAST BASE AND JUNCTION BOX
237-238	*	(PCO) PRECAST CURB INLET OUTSIDE ROADWAY
239-240	*	(PSL) PRECAST SLAB LID
241	*	(PAZD) PRECAST AREA ZONE DRAIN
242	*	(CGT-PCO) CURB AND GUTTER TRANSTION DETAILS FOR PCO INLET
		ENVIRONMENTAL
243		SW3P NARRATIVE
244-248		SW3P LAYOUT PHASE 1 STEP 1
249-250		SW3P LAYOUT PHASE 1 STEP 2
251-268		SW3P LAYOUT PHASE 2 STEP 1
269-286		SW3P LAYOUT PHASE 2 STEP 2
287-288		SW3P LAYOUT PHASE 3
289	*	(EC(1)-16) TEMPORARY EROSION, SEDIMENT AND WATER POLLUTION CONTROL MEASURES
290	*	(EC(2)-16) TEMPORARY EROSION, SEDIMENT AND WATER POLLUTION CONTROL MEASURES
291	*	(EC(3)-16) TEMPORARY EROSION, SEDIMENT AND WATER POLLUTION CONTROL MEASURES
292-294	*	(EC(9)-16) TEMPORARY EROSION, SEDIMENT AND WATER POLLUTION CONTROL MEASURES
295		SWPPP EXAMPLE INTERSECTION
		STRUCTURAL
296-297		BRIDGE LAYOUT
298-299		ABUTMENT DETAILS
300-301		BENT DETAILS
302		SPAN AND SLAB DETAILS
303		FRAMING PLAN
304		ESTIMATED QUANTITIES AND BEARING SEAT ELEVATIONS
305-311		RETAINING WALL PLAN & PROFILE
312-315		MISCELLANEOUS WALL DETAILS
316	*	(IGND) - PRESTRESSED CONCRETE I-GIRDER DESIGNS (NON-STANDARD SPANS) STRUCTURAL
317-318	*	(IGD) - PRESTRESSED CONCRETE I-GIRDER DETAILS
319-321	*	(IGEB) - ELASTOMERIC BEARING AND GIRDER END DETAILS PRESTR CONCRETE I-GIRDERS
322-323	*	(FD) - COMMON FOUNDATION DETAILS
324-325	*	(MEBR-C) - MIN ERECTION AND BRACING RQMTS PRESTRESSED CONCRETE I GIRDERS AND I-BEAMS
326	*	(SEJ-B) - SEALED EXPANSION JOINT TYBE B WITHOUT OVERLAY
327-330	*	(PCP) - PRESTRESSED CONCRETE PANELS OPTIONAL DECK DETAILS
331	*	(PCP-FAB) - PRESTRESSED CONCRETE PANEL FABRICATION DETAILS
332-333	*	(PMDF) - PERMANENT METAL DECK FORMS
334-335	*	(IGTS) - THICKENED SLAB END DETAILS PRESTRESSED CONCRETE I-GIRDER SPANS
336-337	*	(IGMS) - MISCELLANEOUS SLAB DETAILS PRESTR CONCRETE I-GIRGERS
338	*	(CSAB) - CEMENT STABALIZED ABUTMENT BACKFILL ABUTMENT
339	*	(BAS-C) - BRIDGE APPROACH SLAB CONCRETE PAVEMENT
340-341	*	PEDESTRIAN RAIL TYPE PR22
342	*	(RW 1(L)A) RETAINING WALLS
343	*	(RW 2) RETAINING WALL MISCELLANEOUS DETAILS
344-345	*	RW(MSE) MECHANICALLY STABILIZED EARTH RETAINING WALL
346	*	RW(TRF) RETAINING WALL TRAFFIC RAILING FOUNDATIONS
347	*	RW(EM) EARTHWORK MEASUREMENT AT RETAINING WALLS
348	*	RW(MSE)DD MECHANICALLY STABILISED EARTH RETAINING WALL DESIGN DATA
		CROSS SECTIONS
349-449		CROSS SECTIONS

THE STANDARD SHEETS SPECIFICALLY SHOWN WITH PRECEDING (*), HAVE BEEN SELECTED BY ME OR UNDER MY RESPONSIBLE SUPERVISION AS BEING APPLICABLE TO THIS PROJECT.

DESIGN

INTERIM REVIEW

DOCUMENT INCOMPLETE. NOT INTENDED FOR PERMIT, BIDDING OR CONSTRUCTION.

ENGINEER: TYLER PAYNE DUBE

P.E. SERIAL NO: 118612

DATE: 1/9/2020

APPROVAL

INTERIM REVIEW

DOCUMENT INCOMPLETE. NOT INTENDED FOR PERMIT, BIDDING OR CONSTRUCTION.

ENGINEER: JOHN A. TYLER

P.E. SERIAL NO: 105193

DATE: 1/9/2020

REV. NO.	DATE	DESCRIPTION	BY

PAPE-DAWSON ENGINEERS

SAN ANTONIO | AUSTIN | HOUSTON | FORT WORTH | DALLAS

2000 NW LOOP 410 | SAN ANTONIO, TX 78213 | 210.375.9000

TBPE FIRM REGISTRATION #470 | TBPLS FIRM REGISTRATION #10028800

City of New Braunfels

KLEIN RD PHASE 2

INDEX OF SHEETS

SHEET 1 OF 1

DGN:	STATE	PROJECT NO.	ROADWAY
CHK DGN:	TEXAS	NB 18-026	KLEIN RD
DWG:	COUNTY	CITY	SHEET NO.
CHK DWG:	GUADALUPE	NEW BRAUNFELS	2

Plotted on: 1/9/2020

Control: N/A

County: Guadalupe

Highway: Klein Rd Ph 2

**********GENERAL NOTES**********
TxDOT Standard Specifications for Construction and Maintenance of Highways, Streets, and Bridges (November 1, 2014)

========== **Basis of Estimate** ==========

Item	Description	Rate/Area	Quant-Unit
168-6001	Vegetative Watering	1.3 GAL/SY/WEEK (11073 SY/12 WEEKS)	172.74-MG
310-6001	PRIME COAT (MULTI OPTION)	0.3 GAL/SY (32,485 SY)	6,745.5-GAL
341-6281	TACK COAT	0.1 GAL/SY (32,485 SY)	6,497.0-GAL
340-6120	LIME (HYDRATED LIME (DRY))	30 LB/SY-IN (36,587 SY)	548.8-TON
341-6028	D-GR HMA TY-C PG70-22	110 LB/SY-IN (32,485 SY)	5,360-TON
341-6049	D-GR HMA TY-D PG76-22	110 LB/SY-IN (32,485 SY)	5,360-TON
6210-XXXX	PVC MOISTURE BARRIER	0.41 SY/LF (4682 LF)	1,934-TON

--General--

G-3 Contact the Engineer or the City when construction operations are within 400 feet of a signalized intersection to determine/verify the location of loop detectors, conduit, ground-boxes, etc. Repair or replace any signal equipment damaged by construction operations. The method of repair or replacement shall be pre-approved and inspected. Depending on the type and extent of the damage, the Engineer reserves the right to perform the repair or replacement work and the Contractor will be billed for this work.

G-5 To better fit field conditions, the cross sections may be varied when approved.

G-6 If there are waste areas or material source areas, follow the Texas Aggregate Quarry and Pit Safety Act requirements.

Control: N/A

County: Guadalupe

Highway: Klein Rd Ph 2

G-7 Any materials removed and not reused and determined to be salvageable shall be stored within the project limits at an approved location or delivered undamaged to the storage yard as directed. Properly dispose unsalvageable materials in accordance with local, state, and federal regulations. Deface traffic signs so that they will not reappear in public as signs.

G-8 Any sign panels that are adjusted or removed and replaced, shall be done the same workday unless otherwise approved. This work shall be considered subsidiary to Item 502.

G-9 Notify the Engineer at least two weeks prior to a proposed traffic pattern change(s) that will require a revision to traffic signals.

G-10 Locate and reference all manholes and valves within the construction area with station and offset. Each manhole and valve shall be identified by its owner. No roadwork will begin until this list has been submitted. Gas valves have to be accessible at all times, therefore; temp. CTB, material stock piles, etc. cannot be placed over these valves.

G-11 Construct all manholes and valves to final pavement elevations prior to the final mat of ACP. If, between the final elevation adjustment and the final mat of ACP, the manholes and valves are going to be exposed to traffic, place temporary asphalt around the manhole and valve to provide a +/- 50:1 taper. The cost of elevation adjustment will be part of the manhole and valve work, and asphalt tapers are considered subsidiary to Item 502.

Work times are from 8:00 am to 5:00 pm.

Irrigation heads and fixture relocations in conflict with the proposed improvements are not paid for separately but are subsidiary to various bid items.

Buildings and Structures must be protected from concrete splash at all times. The Contractor is to install a material approved by the Engineer which will guard the buildings against concrete splash. This work is considered subsidiary to Item 531 and will not be paid separately. If concrete splash litters a building facade the Contractor, at their expense, is responsible for cleaning and remedying the concrete as approved by the Engineer.

Grade street intersections and median openings for surface drainage.

Sweep and remove all litter, construction debris and surplus material on the right-of-way within the project limits to keep the jobsite neat at all times. Keep roadways and sidewalks free of sediment. Consider subsidiary to pertinent items.

Construct all ramps, sidewalks, steps, curb ramps, handrails, pedestrian push buttons, and other pedestrian elements in accordance with Proposed Guidelines for Pedestrian Facilities in the Public Right-of-Way (PROWAG) issued by the United States Access Board. Maintain one copy of PROWAG at the project site at all times.

REV. NO.	DATE	DESCRIPTION	BY

PAPE-DAWSON ENGINEERS
SAN ANTONIO | AUSTIN | HOUSTON | FORT WORTH | DALLAS
2000 NW LOOP 410 | SAN ANTONIO, TX 78213 | 210.375.9000
TBPE FIRM REGISTRATION #470 | TBPLS FIRM REGISTRATION #10028800

City of New Braunfels

KLEIN RD PHASE 2

GENERAL NOTES

SHEET 1 OF 11

DGN:	STATE	PROJECT NO.	ROADWAY
CHK DGN:	TEXAS	NB 18-026	KLEIN RD
DWG:	COUNTY	CITY	SHEET NO.
CHK DWG:	GUADALUPE	NEW BRAUNFELS	3

Design Filename: H:\Projects\510\30\03\Design\Civil\General\5103003_GeneralNotes.dgn

Plotted on: 1/9/2020

Control: N/A

County: Guadalupe

Highway: Klein Rd Ph 2

poles require bracing, contact the electrical company to coordinate the de-energizing and bracing. Work pertaining to de-energizing lines, bracing poles and any other protective measures required will not be paid at the expense of City of New Braunfels.

Dust control is to be performed a minimum of three times per day and as needed during construction (including weekends). Dust control will be considered subsidiary to the various bid items, and will not be paid for directly.

Personnel will be experienced in items of work in contract. Safety vests and hard hats will be pre-approved and worn at all times when outside vehicles within the work area.

Pavement markers will be left in place until such time as they are in conflict with the work in progress.

Referencing of all existing striping and pavement markings prior to beginning paving operations shall be the Contractor's responsibility.

All pavement markings and/or striping that are in conflict with traffic operations will be removed by the Contractor. Such removal will be considered subsidiary to the various bid items, and will not be paid for directly.

Existing storm sewers and utilities are shown from the best available information. Verify the location of all underground facilities prior to starting work.

Provide temporary drain openings at all low points or other drainage structures, as required, at the Contractor's expense.

Remove any obstructions to existing drainage due to the Contractor's operations, as required, at the Contractor's expense.

If construction has not commenced within one-year of City approval for construction inspection, that approval is no longer valid.

The most current editions of the Texas Department of Transportation Standard Specifications for Construction of Highways, Streets and Bridges shall be followed for all construction except as amended by the City of New Braunfels Standard Details.

All responsibility for the adequacy of these plans remains with the engineer of record. In accepting these plans, the City of New Braunfels must rely upon the adequacy of the work of the engineer of record.

Control: N/A

County: Guadalupe

Highway: Klein Rd Ph 2

Prior to the start of construction the Contractor shall contact the City of New Braunfels to set a preconstruction meeting. A 48-hour advanced notification is required for all inspection and meeting requests.

For Public Infrastructure Permit **(SC)** or Grading Permit **(GP)** Projects:

- For inspections, you must call before 12:00 p.m., 48 hours prior to your inspection request.
- Each inspection will be allotted 1 hour unless you request for more time.
- Once your request has been accepted, you will receive a call from the City of New Braunfels Inspector.

For Commercial Permit **(CP)** Projects:

- All inspections are to be called in at 830-221-4068 or,

- Faxed in at 830-608-2117 or,
- E-mailed at inspections@nbtexas.org.

It is the Contractor's responsibility to see that all temporary and permanent traffic control devices are properly installed and maintained in accordance with the plans and latest edition of the Texas Manual on Uniform Traffic Control Devices. If, in the opinion of the engineering representative and the construction inspector, the barricades and signs do not conform to established standards or are incorrectly placed or are insufficient in quantity to protect the general public, the construction inspector shall have the option to stop operations until such time as the conditions are corrected. If the need arises, additional temporary traffic control devices may be ordered by the Engineering representative at the Contractor's expense.

Type II B-B blue reflective raised pavement marker shall be installed in the center of the roadway adjacent to all fire hydrants. In locations where hydrants are situated on corners, blue reflective raised pavement markers shall be installed on both approaches which front the hydrant. The raised pavement marker shall meet TxDOT material, epoxy and adhesive specifications.

Groundwater

It shall be the responsibility of the developer, Contractor, subcontractors, builders, City, and project engineer to immediately notify the Office of the City Engineer and project engineer if the presence of groundwater within the site is evident. Upon notification the project engineer shall respond with plan revisions for the mitigation of the groundwater issue. The City Engineer shall respond within two (2) business days upon receipt of the mitigation plan. All construction activity, impacted by the discovery of groundwater, shall be suspended until the City Engineer grants a written approval of the groundwater mitigation plan.

REV. NO.	DATE	DESCRIPTION	BY

PAPE-DAWSON ENGINEERS
SAN ANTONIO | AUSTIN | HOUSTON | FORT WORTH | DALLAS
2000 NW LOOP 410 | SAN ANTONIO, TX 78213 | 210.375.9000
TBPE FIRM REGISTRATION #470 | TBPLS FIRM REGISTRATION #10028800

City of New Braunfels

KLEIN RD PHASE 2

GENERAL NOTES

SHEET 2 OF 11

DGN:	STATE	PROJECT NO.	ROADWAY
CHK DGN:	TEXAS	NB 18-026	KLEIN RD
DWG:	COUNTY	CITY	SHEET NO.
CHK DWG:	GUADALUPE	NEW BRAUNFELS	4

Design Filename: H:\Projects\510\30\03\Design\Civil\General\5103003_GeneralNotes.dgn

Plotted on: 1/9/2020

Record Drawings

As per Platting Ordinance Section 118-38m.: When all of the improvements are found to be constructed and completed in accordance with the approved plans and specifications and with the City's standards, and upon receipt of one set of "Record Drawing" plans, and a digital copy of all plans (PDF) the City Engineer shall accept such improvements for the City of New Braunfels, subject to the guaranty of material and workmanship provisions in this Section.

Construction Note

Contractor is responsible to ensure that erosion control measures and stormwater control sufficient to mitigate off site impacts are in place at all stages of construction.

Drainage Note

Drainage improvements sufficient to mitigate the impact of construction shall be installed prior to adding impervious cover.

Soils Testing

Proctors shall be sampled from on site material (on site is defined as limits of construction for this plan set) and a copy of the proctor results shall be delivered to the City of New Braunfels Street Inspector prior to any density tests.

Roadway

All roadway compaction tests shall be the responsibility of the developer's Geotechnical Engineer. Flexible base or fill/embankment material shall be placed in uniform layers not to exceed eight inches (8") loose. The required density for the fill/embankment material shall meet the requirements of TxDOT's Specification Item 132. The required density for the flexible base material shall meet the requirements of TxDOT's Specification Item 247. Each layer of material, inclusive of subgrade, shall be compacted as specified and tested for density and moisture in accordance with Test Methods TEX-113-E, TEX-114-E, TEX-115-E. The number and location of required tests shall be determined by the Geotechnical Engineer and approved by the City of New Braunfels Street Inspector. At a minimum, tests shall be taken every 200 LF for each lift. Upon completion of testing, the Geotechnical Engineer will provide the City of New Braunfels Street Inspector with all testing documentation and a certification stating that the placement of flexible

Drainage Trench Compaction
All utility trench compaction tests within the street pavement/sidewalk section shall be the responsibility of the developer's Geotechnical Engineer. Fill material shall be placed in uniform layers not to exceed twelve inches (12") loose. Determine the maximum lift thickness based on

Control: N/A

County: Guadalupe

Highway: Klein Rd Ph 2

the ability of the compacting operation and equipment used to meet the required density. Each layer of material shall be compacted to a minimum 95% density and tested for density and moisture in accordance with Test Methods TEX-113-E, TEX-114-E, TEX-115-E. The number and location of required tests shall be determined by the Geotechnical Engineer and approved by the City of New Braunfels Street Inspector. At a minimum, tests shall be taken every 200 LF for each lift and every other service line. Upon completion of testing the Geotechnical Engineer shall provide the City of New Braunfels Street Inspector with all testing documentation and a certification stating that the placement of fill material has been completed in accordance with the plans. Additional density tests may be requested by the City of New Braunfels Inspector.

Curb Cut Due To Construction Of New Right-Of-Way Construction

Sawcut existing streets and match to new construction. Sawcut existing curb to tie into existing construction. Saw cutting existing pavement, concrete, and riprap is not paid for separately but is subsidiary to various bid items.

Construction Stabilized Entrance

Sawcut curb for construction entrance. Stabilized construction area shall be constructed as indicated on the plans and maintained so that construction debris does not fall within the city right-of-way. Right- of-way must be cleared from mud, rocks, etc. at all times.

Signing And Pavement Marking Plan Notes

The Contractor shall furnish and install all regulatory and warning signs, streets name signs and sign mounts in accordance with approved engineering plans. The City will inspect all signs at final inspection.

The Contractor shall install all pavement markings in accordance with approved engineering plans. The Contractor shall notify the City at least twenty-four (24) hours prior to the installation of all sealer and final markings. The City will inspect all markings at final application.

References to manufacturer's trade name or catalog numbers are for the purpose of identification only. Similar materials from other manufacturers are permitted if they are of equal quality, comply with the specifications for this project, and are approved, except for roadway illumination, electrical, and traffic signal items.

The cost for materials, labor, and incidentals to provide a minimum 14'-wide driving surface for traffic across the roadway and for ingress and egress to private property in accordance with Section 7.2.4 of the standard specifications is subsidiary to the various bid items. Restore access roadways to their original condition upon completing construction.

REV. NO.	DATE	DESCRIPTION	BY

PAPE-DAWSON ENGINEERS
SAN ANTONIO | AUSTIN | HOUSTON | FORT WORTH | DALLAS
2000 NW LOOP 410 | SAN ANTONIO, TX 78213 | 210.375.9000
TBPE FIRM REGISTRATION #470 | TBPLS FIRM REGISTRATION #10028800

City of New Braunfels

KLEIN RD PHASE 2

GENERAL NOTES

SHEET 3 OF 11

DGN:	STATE	PROJECT NO.	ROADWAY
CHK DGN:	TEXAS	NB 18-026	KLEIN RD
DWG:	COUNTY	CITY	SHEET NO.
CHK DWG:	GUADALUPE	NEW BRAUNFELS	5

Design Filename: H:\Projects\510\30\03\Design\Civil\General\5103003_GeneralNotes.dgn

Plotted on: 1/9/2020

Control: N/A

County: Guadalupe

Highway: Klein Rd Ph 2

--Item 5--

5-2 Taper ACP placed at curb inlets, traffic inlets and slotted drains.

5-4A. Prior to letting, bidders may obtain a free computer diskette or a computerized transfer of files (from the Engineer's office) that contains the earthwork information.

5-7 Provide a non-intrusive back-up alarm system on all heavy equipment used in close proximity to residential areas. This item is subsidiary to various bid items.

--Item 6--

6-1 Show the stockpile lot and/or sub lot numbers on all tickets for all materials.

--Item 7--

7-1 The project's total disturbed area is 11.30 acres. The disturbed area in all project locations and Contractor project specific locations (PSL's), within 1/4 mile of the project limits, will further establish the authorization requirements for storm water discharges. The Contractor will obtain an authorization to discharge storm water from the Texas Commission on Environmental Quality (TCEQ) for the construction activities shown on the plans. Obtain any required authorization from the TCEQ for any PSL's on or off the ROW. When the total area disturbed on the project and PSL's within 1/4 mile of the project exceeds 5 acres, provide a copy of the Contractor NOI for PSL's to the Engineer (to the appropriate MS4 operator when the project is on an off-state system route).

7-3 Notify the Engineer of the disturbed acreage within one (1) mile of the project limits. Obtain authorization from the TCEQ for Contractor PSL's for construction support activities on or off ROW.

7-5 No significant traffic generators events identified.

--Item 8--

8-1 Working days will be computed and charged in accordance with Article 8.3.1.5: Calendar Day.

8-1A Create and maintain a bar chart schedule.

--Item 9--

Show proof of certification by the Texas Commission on Law Enforcement Standards.

All law enforcement personnel used in Work Zone Traffic Control shall be trained for performing duties in work zones and are required to take "Safe and Effective Use of Law Enforcement Personnel in Work Zones" (Course #133119) which can be found online at the following site: www.nhi.fhwa.dot.gov

Control: N/A

County: Guadalupe

Highway: Klein Rd Ph 2

Certificates of completion should be available to all who finish the course. These should be kept by the officers in order to substantiate completion when reporting to the work site.

--Item 100--

100-1 Begin clearing operations after trees and other areas of vegetation to be protected have been identified and approved. Install fencing around features to be protected as shown in the plans or directed. Coordinate all right of way clearing operations with the SW3P.

100-2 Trim and remove brush and trees as needed for construction operations. Obtain approval for proposed method of tree and brush trimming and removal. Vertical flailing equipment is not allowed. Treat damaged or cut branches, roots and/or stumps of all oak trees with a commercial tree wound dressing. Disinfect all pruning tools with a solution of 70% alcohol before moving from one tree to another. Unless otherwise approved remove all resulting vegetative debris from the ROW within 24 hours. The Engineer can stop all construction operations if the dressing, cut and removal requirements are not followed.

--Item 110--

110-1 Where excavation extends beyond a right of way fence, remove and replace the fence to a comparable condition. This work shall be considered subsidiary to the bid item.

--Item 132--

132-1 At no time shall the retaining wall backfill material exceed the adjacent embankment operation by more than one embankment lift. At no time will the embankment adjacent to the retaining wall backfill exceed the wall backfill by any elevation.

--Item 160--

160-1 Approximately 1220 CY of existing topsoil is required. Existing topsoil within the ROW may be windrowed or stockpiled (as approved) for later use under this Item. Place erosion control measures for the stockpile and/or windrow.

--Item 162--

162-1 Furnish and place block grass sod of the same species as the surrounding vegetation.

--Item 164--

Seeding for the purpose of establishing vegetation within constructed earthen channels, basins and disturbed areas shall be conducted in accordance with Item 164 (Seeding for Erosion Control) of TxDOT's Standard Specifications for Construction and Maintenance of Highways, Streets and Bridges manual. Only seed types and mixes specified for the San Antonio District (District 15) in Tables 1 and 2 under Item 164 shall be utilized. During the Cool Season (Sept 1-Nov 30), Cereal Rye and seed species specified for the San Antonio District in Table 3 may be used. For Cool Season seeding applications, cool season seed mixes shall be used in conjunction with seed mixes for the San Antonio District as specified in Table 1 and 2 under Item 164.

REV. NO.	DATE	DESCRIPTION	BY

PAPE-DAWSON ENGINEERS
SAN ANTONIO | AUSTIN | HOUSTON | FORT WORTH | DALLAS
2000 NW LOOP 410 | SAN ANTONIO, TX 78213 | 210.375.9000
TBPE FIRM REGISTRATION #470 | TBPLS FIRM REGISTRATION #10028800

City of New Braunfels

KLEIN RD PHASE 2

GENERAL NOTES

SHEET 4 OF 11

DGN:	STATE	PROJECT NO.	ROADWAY
CHK DGN:	TEXAS	NB 18-026	KLEIN RD
DWG:	COUNTY	CITY	SHEET NO.
CHK DWG:	GUADALUPE	NEW BRAUNFELS	6

Design Filename: H:\Projects\510\30\03\Design\Civil\General\5103003_GeneralNotes.dgn

Plotted on: 1/9/2020

Design Filename: H:\Projects\510\30\03\Design\Civil\General\5103003_GeneralNotes.dgn

Control: N/A

County: Guadalupe

Highway: Klein Rd Ph 2

It may be deemed necessary to incorporate topsoil and soil amendments (i.e. compost/ fertilizer) into existing soil in order to facilitate vegetation growth. Topsoil, compost and fertilizer additions shall be conducted according to Items 160, 161 and 166 of TxDOT's Standard Specifications manual, respectively.

Watering may also be necessary to facilitate and expedite the sprouting and growth of vegetation. Item 168 of TxDOT's Standard Specifications manual shall be adhered to for vegetative watering.

If extended drought conditions exist that hinder or prohibit the growth and establishment of vegetation, the contract/ developer shall provide a plan to the City of New Braunfels describing the measures that will be taken to stabilize earthen drainage infrastructure until a time when growing conditions become more favorable.

--Item 168--

168-1 Apply vegetative watering as needed to supplement natural rainfall during the vegetation establishment period. Plan quantity of irrigation water is based on the application of a total of 1.3 gal of water each week for each sq. yd. of area that is sodded or seeded. Establishment time is estimated to be 12 weeks or minimum 75% establishment for both sod and permanent seed mixes. Temporary seeding will require less time for establishment. Provide a schedule and coordinate watering cycles and rates per cycle with the Engineer. Obtain approval if the quantity of water to be applied is expected to exceed the plan quantity. Adjust the amount of water applied with each cycle and the number of cycles each wk. according to actual site conditions. Drought or other conditions, as determined by the Engineer, may require the application of supplemental irrigation during hours other than normal working hours.

--Item 247--

Provide Flexible Base material as approved by the City.

--Item 260--

Provide Hydrated Lime Slurry as approved by the Engineer.

--Item 310--

Provide Prime Coat as approved by the Engineer.

--Item 275--

275-1 The Engineer will designate a target cement content and optimum moisture content necessary to produce a stabilized mixture that meets the strength requirements and moisture susceptibility requirements shown in Table 1. The Contractor shall furnish the Engineer with representative samples of the materials to be used in production of the cement treated base.

Table 1
Requirements for Cement Treatment

ıtent (by dry weight of base)		
nfined Compressive Strength	Part I	
Strength after Moisture g (min.)	Part I (10 day capillary soak)	-Day Unconfined Compressive

Microcracking will be required in accordance with Item 275.4.7.

--Item 320—

320-1 Construct all longitudinal ACP joints adjacent to a travel lane with a joint maker device that will create a 3:1 to 6:1 taper. For placement of 2 inches or more, the device shall provide a maximum ½ inch vertical edge. Taper outside edges (next to the grass) or backfill (shoulder-up) the same day.

320-2 Provide a material transfer device capable of providing a continuous flow of material to the paver. The material transfer device will consist of a windrow elevator or better.

--Item 340, 341, 342, 344, 346, 347, & 348—

Asphaltic concrete pavement shall be the type of hot mix asphalt as defined in TxDOT's standard specifications for current TxDOT Standard Specifications for Construction of Highways, Street and Bridges.

The City of New Braunfels will not accept the use of Recycled Asphalt Pavement (RAP) or Recycled Asphalt Shingles (RAS) in asphalt mixtures for new roadways. Any debris inclusions within new asphalt pavements will result in asphalt removal and replacement from curb to curb for limits to be determined by the City of New Braunfels.

The asphaltic concrete pavement surface course shall be plant mixed, hot laid type "D" meeting the specification requirements of TxDOT Item 340. The asphaltic concrete pavement sub-surface courses shall be plant mixed, hot laid type "B" meeting the specification requirements of TxDOT Item 340. The mixture shall be designed per the design requirements specified in TxDOT Item 340 and shall be compacted to between 91 and 95 percent of the maximum theoretical density as determined by TxDOT test method TEX-227-F. Place the mixture when the roadway surface temperature is at or above 60°F. Complete all compaction operations before the pavement temperature drops below 160°F. The asphalt cement content by percent of total mixture weight shall fall within a tolerance of +0.5 percent from a specific mix design.

Table 10, in Item 340, Table 10 in Item 341 and Table 11 in Item 344, Hamburg Wheel Test Requirements tested in accordance with Tex-242-F are changed for PG 64-22 or lower and PG

REV. NO.	DATE	DESCRIPTION	BY

PAPE-DAWSON ENGINEERS
SAN ANTONIO | AUSTIN | HOUSTON | FORT WORTH | DALLAS
2000 NW LOOP 410 | SAN ANTONIO, TX 78213 | 210.375.9000
TBPE FIRM REGISTRATION #470 | TBPLS FIRM REGISTRATION #10028800

City of New Braunfels

KLEIN RD PHASE 2

GENERAL NOTES

SHEET 5 OF 11

DGN:	STATE	PROJECT NO.	ROADWAY
CHK DGN:	TEXAS	NB 18-026	KLEIN RD
DWG:	COUNTY	CITY	SHEET NO.
CHK DWG:	GUADALUPE	NEW BRAUNFELS	7

Plotted on: 1/9/2020

70-22. Minimum number of passes at 1/2" Rut Depth, Tested at 122 degrees F will be 5,000 and 10,000 respectively.

2. Design all mixture types using a target laboratory-molded density of 96.5%, when the Texas Gyrator Compactor is utilized. Increase the target laboratory-molded density to 97.0% or 97.5% at the Contractor's discretion. When utilizing SGC, design all mixture types at 50 gyrations (N-Design) and a target laboratory-molded density of 96.0%, but may be reduced to no less than 35 gyrations at the Contractor's discretion.

3. The asphalt plant shall have truck scales as defined in Item 520. Give three weight tickets bearing the date, the truck number, the gross, net & tare weights to the truck driver for the State inspector at the spreading and finishing operation. Trucks may be required to weigh on public scales or portable platform scales to verify the weight of the ticket.

4. Submit a copy of the Tex 233-F production charts on a weekly basis. At the end of the ACP work, provide all originals.

5. Crushing of aggregate for hot mix and immediate use for production of the mix is not allowed. Stockpile the aggregate until enough material is available for five days of production unless prior approval is provided. Hold a pre-placement meeting one month prior to the placement of the hot mix.

6. The main purpose of hot mix cores taken by the City are for payment calculations. If (for quality control purposes) the core information is needed sooner, take additional cores.

7. Do not use diesel or solvents as asphalt release agents in production, transportation, or construction.

Schedule lay-down placement where uneven travel lanes are minimized and eliminated weekly.

8. The use of Recycled Asphalt Pavement (RAP) and Recycled Asphalt Shingles (RAS) will not be allowed on the final riding surface.

Materials testing is to be completed by the City.

Minimum Roadway Placement Temperature
--Item340, 341, & 344--

1. Place mixture when the roadway surface temperature is equal to or higher than listed in Table 1 unless otherwise approved or shown on the plans. Measure the roadway surface temperature with a hand-held thermal camera or infrared thermometer. Placement may be allowed to begin prior to the roadway surface reaching the required temperature if conditions are such that the roadway surface will reach the required temperature within 2 hrs. of beginning placement operations. Place mixtures only when weather and moisture conditions of the roadway surface

Control: N/A

County: Guadalupe

Highway: Klein Rd Ph 2

are suitable in the opinion of the Engineer. The Engineer may restrict the Contractor from paving if the ambient temperature is likely to drop below 32°F within 12 hr. of paving.

Table 1
Minimum Pavement Surface Temperatures

Specification Item Number	High Temperature Binder Grade	Minimum Pavement Surface Temperatures in Degrees Fahrenheit *	
		Subsurface Layers or Night Paving Operations	Surface Layers Placed in Daylight Operations
340, 341, & 344	PG 64	45	50
	PG 70	55	60
	PG 76	60	60

* Except for PG 64, may pave at temperatures 10º F lower than the values shown in Table 1 when utilizing a Material Transfer Vehicle that is capable of providing a remixing, and continuous flow of material from the haul truck to the paver, such as a Roadtec SM-2500e/ex, that eliminates thermal segregation. In these cases, use either an infrared bar attached to the paver, or a hand held thermal camera or infrared thermometer, or a hand held infrared thermometer operated in accordance with Text Method 244-F to demonstrate that the uncompacted mat has no more than 10º F of thermal segregation.

Substitute Binder
--Item340, 341 & 344--

The Contractor may use a substitute PG binder listed below in Table 1 instead of the PG binder originally specified in Table 5 of the Standard Specification, if the substitute PG binder and mixture made with the substitute PG binder meet the following:

- The substitute binder meets the specification requirements for the substitute binder grade in accordance with Section 300.2.10., "Performance-Graded Binders;" and

The mixture has less than 10.0 mm of rutting on the Hamburg Wheel test (Tex-242-F) after the number of passes required for the originally specified binder. Use of substitute PG binders may only be allowed at the discretion of the Engineer if the Hamburg Wheel test results are between 10.0 mm and 12.5 mm

Table 1
Allowable Substitute PG Binders and Maximum Recycled Binder Ratios

Originally Specified PG Binder	Allowable Substitute PG Binder	Maximum Ratio of Recycled Binder[1] to Total Binder (%)		
		Surface	Intermediate	Base

REV. NO.	DATE	DESCRIPTION	BY

PAPE-DAWSON ENGINEERS
SAN ANTONIO | AUSTIN | HOUSTON | FORT WORTH | DALLAS
2000 NW LOOP 410 | SAN ANTONIO, TX 78213 | 210.375.9000
TBPE FIRM REGISTRATION #470 | TBPLS FIRM REGISTRATION #10028800

City of New Braunfels

KLEIN RD PHASE 2

GENERAL NOTES

SHEET 6 OF 11

DGN:	STATE	PROJECT NO.	ROADWAY
CHK DGN:	TEXAS	NB 18-026	KLEIN RD
DWG:	COUNTY	CITY	SHEET NO.
CHK DWG:	GUADALUPE	NEW BRAUNFELS	8

Design Filename: H:\Projects\510\30\03\Design\Civil\General\5103003_GeneralNotes.dgn

Plotted on: 1/9/2020

Control: N/A

County: Guadalupe

Highway: Klein Rd Ph 2

HMA				
76-22[2,5]	70-22	20.0	20.0	20.0
	70-28	20.0	35.0	40.0
70-22[2]	64-22	20.0	20.0	20.0
	64-28 or 58-28	20.0	35.0	40.0
64-22[2]	58-28	20.0	35.0	40.0
76-28[2,5]	70-28	20.0	20.0	20.0
70-28[2]	64-28 or 58-28	20.0	20.0	20.0
	64-34 or 58-34	20.0	35.0	40.0
64-28[2]	58-28	20.0	20.0	20.0
	58-34	20.0	35.0	40.0
WMA[3]				
76-22[2,5]	70- 22	20.0	35.0	40.0
70-22[2]	64-22 or 58-28	20.0	35.0	40.0
64-22[4]	58-28	20.0	35.0	40.0
76-28[2,5]	70-28	20.0	35.0	40.0
70-28[2]	64-28 or 58-28	20.0	35.0	40.0
64-28[4]	58-28	20.0	35.0	40.0

1. Combined recycled binder from RAP and RAS.
2. Use no more than 20.0% recycled binder when using this originally specified PG binder.
3. WMA as defined in Section 341.2.6.2., "Warm Mix Asphalt (WMA)."
4. When used with WMA, this originally specified PG binder is allowed for use at the maximum recycled binder ratios shown in this table.
5. No more than 1-PG grade lower than what is show on the plans will be permitted for Surface mixtures

--Item 479--

All wastewater utility adjustments under this Project are subject to the inspection and acceptance by New Braunfels Utilities (NBU) or a duly authorized agent of NBU. Contractor is responsible for providing written notice to NBU Water & Wastewater no less than 48 hours in advance of commencing work under this Project. All work shall conform to the current New Braunfels Utilities Water Systems Connection/Construction Policy.

--Item 403--

403-1 The Contractor and/or Contractor's Engineer who selects and designs the temporary shoring is responsible for the overall (global) stability calculations as well as internal stability and sliding calculations (including mat and soil nail pullout) as per the TxDOT Bridge Division Geotechnical Manual. If the Contractor chooses a Temporary Earth Retaining Wall for Temporary Shoring, then the Contractor and/or Contractor's Engineer is required also to provide wire struts as shown on these plans. Designs for any type of Retaining Wall used for Temporary Special Shoring shall conform to the TXDOT Geotechnical Manual Chapter 6: Retaining Walls.

--Item 421--

421-1 Use an automated ticket that contains the same information as TxDOT's ticket. Submit the ticket for approval prior to use. The concrete producer will contact the District Laboratory or the Engineer's Office (outside the San Antonio area) to inform TxDOT of scheduled structural

Control: N/A

County: Guadalupe

Highway: Klein Rd Ph 2

concrete batching. Structural concrete includes bridge drill shafts, columns, caps, abutments, deck or top slabs of direct traffic culverts.

Entrained air is allowed for Class P and Class HES concrete only. Air content testing is waived for all classes of concrete.

--Item 422--

422-1 For construction of approach slabs, longitudinal joints shall be placed on lane lines. Joints may be either a saw-cut crack control joint or a construction joint. Saw cut joints shall terminate 1'-0" before reaching the edge of the slab, must be saw cut as soon as possible after placement of concrete, and will be cut within 12 hours of concrete placement. Once sawing begins, it should be a continuous operation and should only be stopped if raveling occurs. Saw cut will be to a depth of 1.5" and filled with approved joint sealant.

--Item 423--

423-1 The backfill material for pre cast retaining walls shall be approved before placement. Build stockpile(s) in lifts not to exceed 2 feet and a minimum working face of not less than 10 feet, but not more than 20 feet.

423-3 Use the approved Mechanically Stabilized Earth (MSE) wall systems listed at: http://www.dot.state.tx.us/business/contractors_consultants/bridge/retaining_wall.htm

When proprietary wall systems are used, a qualified representative of the retaining wall manufacturer must be available upon request during wall construction. As requested or required the manufacturer's representative must be on site to assist with the initial stages of wall construction, provide training to the Contractor wall crew and ensure proper interpretation of MSE wall shop drawings and details. Specific attention must be given to nonstandard wall installation details. The Contractor's wall crew foreman must be on site for the duration of wall construction. Any change to the wall crew foreman may require additional training by the wall supplier. The Contractor will ensure that the retaining walls are installed per the details presented in the construction drawings and as per the proprietary wall system requirements. The Engineer reserves the right to suspend wall construction activities due to any construction issue encountered.

Horizontal and vertical nail spacing on temp or permanent soil nail walls shall not exceed 4 ft.

Type DS material will be required on MSE walls in the area of the reinforcement mats.

--Item 432--

432-1 In all riprap slopes, provide 3 inch diameter weep holes at 10 foot maximum spacing and backed with loose graded gravel or crushed stone and galvanized hardware cloth.

REV. NO.	DATE	DESCRIPTION	BY

PAPE-DAWSON ENGINEERS
SAN ANTONIO | AUSTIN | HOUSTON | FORT WORTH | DALLAS
2000 NW LOOP 410 | SAN ANTONIO, TX 78213 | 210.375.9000
TBPE FIRM REGISTRATION #470 | TBPLS FIRM REGISTRATION #10028800

City of New Braunfels

KLEIN RD PHASE 2

GENERAL NOTES

SHEET 7 OF 11

DGN:	STATE	PROJECT NO.	ROADWAY
CHK DGN:	TEXAS	NB 18-026	KLEIN RD
DWG:	COUNTY	CITY	SHEET NO.
CHK DWG:	GUADALUPE	NEW BRAUNFELS	9

Design Filename: H:\Projects\510\30\03\Design\Civil\General\5103003_GeneralNotes.dgn

432-2 In areas where guard fence posts are to be placed in riprap, the riprap shall have an 18 inch +/-blocked out area (round or square). Blocked out areas shall be backfilled with 2 sack flowable backfill and considered subsidiary to the various bid items.

--Item 465--

465-1 Concrete Class B invert shaping is required at all inlets, manholes and junction boxes in order to insure positive flow. The material and work performed for the placement of the inverts shall be considered subsidiary to this item.

Provide for the safety and health of employees and abide by all OSHA Standards and Regulations. All costs incurred for proper management, shall be subsidiary to this Item.

--Item 496--

496-1 The Contractor will submit a demolition plan for all structures to be replaced and/or removed in accordance with Item 496.

--Item 500--

500-1 "Materials on Hand" payments will not be considered in determining percentages for mobilization payments.

--Item 502—

Prior to beginning construction, the City shall approve the routing of traffic and sequence of work.

Additional signs and barricades as directed by the Engineer shall be considered subsidiary to Item 502.

Construct the project in phases per the Traffic Control Plan in phase order. The Contractor shall not begin construction on a subsequent phase until the active phase is considered complete. A phase is considered complete when all pavement section layers except final riding surface have been constructed; substantially useable sidewalk and driveways have been constructed; and vegetation re-establishment has begun.

The Contractor shall limit impacts to individual driveways to a 3-day turnaround time from demolition to poured concrete. The Contractor shall maintain access to each driveway during construction except during this 3-day period. Construct temporary ramps to maintain access to driveways and city streets as directed by the Engineer. Temporary ramp construction is subsidiary to Item 502.

502-1 Place standard markings no later than 14 days after surface treatment operations are completed.

Control: N/A

County: Guadalupe

Highway: Klein Rd Ph 2

502-2 When advanced warning flashing arrow panels and/or changeable message sign is specified, have one standby unit in good condition at the job site. Standby time shall be considered subsidiary to the bid item.

502-3 Treat the pavement drop-offs as shown in the TCP.

502-4 After written notification, the time frame to provide properly maintained signs and barricades before considered in non-compliance is 48 hours from receipt of the notification. Failure to make corrections as noted may result in payment for this item being withheld.

502-5 There are traffic signals at the intersection of Klein Rd and FM 725. Keep the signals in operation except when necessary for specific installation operations.

502-6 Moving an existing sign to a temporary location is subsidiary to this Item. Installations with permanent supports at permanent locations will be paid for under the applicable bid item (s).

502-7 Mount temporary mailboxes on plastic drum in accordance with Compliant Work Zone Traffic Control Devices, Section K. Temporary mailboxes shall be located for postal delivery by vehicle at all times. Mounting and moving the mailbox as needed for the various construction phases is subsidiary to this Item.

502-8 Notify the Engineer in writing 10 business days in advance of any temporary or permanent lane, closures/detours, restrictions to lane widths, alterations to vertical clearances, or modifications to radii. Any other modifications to the roadway that may adversely affect the mobility of oversized/overweight trucks also require 10 business days advance written notice to the Engineer. Unless shown in the TCP, no lane closures are allowed during special events. Lane closures will not be allowed if this reporting requirement is not met.

502-9 Avoid placing stockpiles within the roadway's horizontal clear zone. If a stockpile is placed within the clear zone, address in accordance with the TMUTCD.

502-10 Do not place barricades, signs, or any other traffic control devices where they interfere with sight distance at driveways or side streets.

502-11 In addition to providing a Contractor's Responsible Person and a phone number for emergency contact, have an employee available to respond on the project for emergencies and for taking corrective measures within 2 hours or within a reasonable time frame as specified by the Engineer.

502-13 If Nighttime work is required and work is not behind positive barrier then full TY 3 reflective gear is required to be worn by all workers, hard hat halos are required to be worn by the flaggers at flagging stations, TY III barricades are required to be spaced at 500 ft, and a mandatory night work meeting is required.

REV. NO.	DATE	DESCRIPTION	BY

PAPE-DAWSON ENGINEERS
SAN ANTONIO | AUSTIN | HOUSTON | FORT WORTH | DALLAS
2000 NW LOOP 410 | SAN ANTONIO, TX 78213 | 210.375.9000
TBPE FIRM REGISTRATION #470 | TBPLS FIRM REGISTRATION #10028800

City of New Braunfels

KLEIN RD PHASE 2

GENERAL NOTES

SHEET 8 OF 11

DGN:	STATE	PROJECT NO.	ROADWAY
CHK DGN:	TEXAS	NB 18-026	KLEIN RD
DWG:	COUNTY	CITY	SHEET NO.
CHK DWG:	GUADALUPE	NEW BRAUNFELS	10

Plotted on: 1/9/2020
Design Filename: H:\Projects\510\30\03\Design\Civil\General\5103003_GeneralNotes.dgn

Plotted on: 1/9/2020

Control: N/A

County: Guadalupe

Highway: Klein Rd Ph 2

Prior to beginning construction, the Engineer shall approve the routing of traffic and sequence of work.

Additional signs and barricades as directed by the Engineer shall be considered subsidiary to Item 502.
Wash the channelizing devices and barricades following each rainfall or snowfall event and at times deemed necessary by the Engineer.

Fill any holes left by barricade or sign supports and restore the area to its original condition. "Sidewalk Closed" (R9-9) signs are to be used while work is ongoing. See TxDOT standard WZ(BTS-2)-13 for more details.

--Item 506--

506-1 An Inspector will perform a regularly scheduled SWP3 inspection every 7 calendar days.

506-3 Failure to address items noted on the SW3P inspection report within two report cycles may result in the Department stopping all construction operations, exclusive of time charges, or withholding that month's estimate until the SW3P deficiencies are corrected unless the Engineer determines that the area is too wet to correct SW3P deficiencies.

Erosion control logs, sandbags and other BMPs will be placed and relocated as directed by the Engineer in order to comply fully with the SW3P requirements.

Water pumped off the project must have sediment and any other solids in suspension removed before discharging.

--Item 512--

New Single Slope or F-Shape CTB (cast in accordance with the Standard Sheets in the plans) may be furnished or the same pre-used shapes (that meet the requirements of this Item) may be furnished. New Safety Shape (New-Jersey) CTB is not allowed, but pre-used New-Jersey (that meets the requirements of this Item) may be furnished. More than one type may be furnished but do not mix the types when placed along the roadway.

--Item 529--

529-1 Class "C" concrete is required for machine extruded curb.

--Item 530--

Use Class A Concrete for all concrete driveways.

Contractor is responsible for notifying residents at least 72 hours in advance prior to excavating driveways. Contractor should not take longer than 3 days to complete the construction of the driveways once excavation begins, weather pending.

Control: N/A

County: Guadalupe

Highway: Klein Rd Ph 2

--Item 531--

531-1 The curb ramp locations shown in the plans have taken into account the geometric features of the intersection, utilities, signage, and pavement markings. If anything changes during construction, the location of curb ramps must be adjusted to ensure they meet PROWAG requirements.

Truncated dome pavers are prohibited.

All detectable warning surfaces are to be prefabricated panels constructed of cast iron or composite materials of contrasting color to the surrounding material, as approved by the Engineer.

Proposed curb ramps, sidewalks, curbs, and riprap are to be doweled 6-in minimum, unless otherwise shown, into existing concrete using ½-in reinforcement placed on 12-in centers.

Curb wall along ramps and landings, unless otherwise shown on the plans, is not paid for separately but is subsidiary to the ramp or landing. If the wall extends above the plane of the landing, retaining wall (unless otherwise noted on the plans) should be utilized. Retaining wall quantities are shown for Contractor information only, payment is subsidiary to Item 531 Sidewalks. See special details sheets for more information.

Areas labeled with a "T" on the construction drawings allow the Contractor to transition to existing conditions. Slope and grade of all transitions must be approved by the Engineer.

Each planar element along the accessible route indicates the maximum slope and cross slope for that element as defined in the plans – in many cases the element can be constructed to achieve the design intent at or below the maximum slope for that element. With the approval of the Engineer, the Contractor may extend the length of ramps or sloped sidewalks to the next planar element (level sidewalk, landing, transition, or driveway) or until the point at which the ramp or sloped sidewalk reaches the height of the adjacent curb, whichever is shorter, in order to achieve the design intent.

Construct compliant curb ramps based upon referenced design criteria, PROWAG and TxDOT Pedestrian Facilities Standards. All intersection corners are unique and it may be necessary to use various combinations of ramp elements to achieve a compliant ramp configuration.

Review the curb ramp location and layout with the inspector prior to demolition so that both parties agree that the curb ramp can be installed properly. Should it become apparent at any time during the ramp layout and construction process that a curb ramp cannot be installed as indicated on the plans, promptly notify the inspector.

Any approval, inspection, or checking of the Contractor's layout and the acceptance of all or any part of it shall not relieve the Contractor of his responsibility to secure the proper dimensions, grades and elevations of the various parts of the work.

REV. NO.	DATE	DESCRIPTION	BY

PAPE-DAWSON ENGINEERS
SAN ANTONIO | AUSTIN | HOUSTON | FORT WORTH | DALLAS
2000 NW LOOP 410 | SAN ANTONIO, TX 78213 | 210.375.9000
TBPE FIRM REGISTRATION #470 | TBPLS FIRM REGISTRATION #10028800

City of New Braunfels

KLEIN RD PHASE 2

GENERAL NOTES

SHEET 9 OF 11

DGN:	STATE	PROJECT NO.	ROADWAY
CHK DGN:	TEXAS	NB 18-026	KLEIN RD
DWG:	COUNTY	CITY	SHEET NO.
CHK DWG:	GUADALUPE	NEW BRAUNFELS	11

Design Filename: H:\Projects\510\30\03\Design\Civil\General\5103003_GeneralNotes.dgn

Plotted on: 1/9/2020

Control: N/A

County: Guadalupe

Highway: Klein Rd Ph 2

Contractor is to match existing concrete color and texturing at various locations which, as directed by the Engineer, require matching.

The furnishing and installation of the sand cushion in the proposed sidewalks, sidewalk ramps and driveways will not be paid for directly but shall be considered subsidiary to this bid item.

The furnishing and installation of pipe underdrains, filter material, and other incidentals to ensure proper drainage of special concrete sidewalk with retaining wall per Concrete Sidewalk (Special)(Type B) will not be paid for directly but shall be considered subsidiary to this bid item and in accordance with Item 531.

Removal of existing concrete, surfaces, asphalt, base material, sign posts, miscellaneous materials, and all incidentals is included in this pay item within the footprint of the proposed work. If additional work related to the removal of existing is required beyond the quantity identified for Contractors information only, no additional payment will be made.

In areas where there is no curb fillet or concrete pavement, saw cut the existing curb and gutter and remove the curb.

When lack of right of way width or obstructions creates insufficient space, the ramp may be relocated within the right of way when authorized by the Engineer. All deficient ramps will be removed and replaced at the Contractor's expense.

For curb ramps, form tooled joints on each side of the ramp section where it meets a flare or curb wall, at each break in ramp slope or geometry, and at intervals equivalent to the width of the sidewalk for the purpose of cracking control. Place expansion joint material between proposed ramps and existing concrete; between proposed sidewalk and utility poles, guy wires, vent pipes, stand pipes and as directed.

Construct concrete steps, as shown in the plans or as directed by the Engineer, measured by the cubic yard and paid for as Item 420 Concrete Substructures.

--Item 560--
Move and replace all mailboxes within the project limits such that they may be served by the mail carrier from a vehicle at all times during and after construction. This work will be considered subsidiary to the various bid items of this contract.

If a permanent (concrete or brick) mailbox is called out to be relocated, rebuild and reset the existing mailbox in the proposed location.

MBGF posts shall be round with domed tops, and not painted. If 10 or less timber posts are needed, they may be purchased locally and will be accepted by visual inspection.

Control: N/A

County: Guadalupe

Highway: Klein Rd Ph 2

540-2 Guard fence posts placed in proposed and/or existing areas of riprap, sidewalks or other concrete shall have an 18 inch +/- (square or round) block out in the concrete. After the posts are installed, the blocked out area shall be topped off with 4 inches of low strength grout/mortar consisting of about 1 sack of cement per cubic yard of mix.

540-4 When connecting a Thrie-Beam to a concrete wingwall, bridge rail, CTB, etc., drill the holes for bolt placement using rotary or core type equipment. Use a core type drill when reinforcing steel is encountered. Do not use percussion or impact drilling. Repair damage to the concrete and spalls exceeding ½" from the edge of the hole.

--Item 666--
666-1 Use TY II material (vs. an acrylic or epoxy) as the sealer for the TY I markings, place the TY II a minimum of 14 calendar days (to provide adequate curing) before placing the TY I markings.

Median nose pavement marking materials are to be approved by the Engineer.

--Item 672--
672-1 Place all adhesive material directly from the heated dispenser to the pavement. Do not use portable or non-heated containers. Use adhesive of sufficient thickness so that when the marker is pressed into the adhesive, 1/8" or more adhesive will remain under 100% of the marker. The adhesive should extend not less than 1/2" but not more than 1 1/2" beyond the perimeter of the marker.

--Item 677--
677-1 Obtain approval before using the mechanical method for the elimination of existing thermoplastic pavement markings.

--Item 680--
680-1 Furnish and install all required materials and equipment necessary for the complete and operating traffic signal installation at the following intersections:

1. FM 725 at Klein Rd

680-2 The locations shown on the plans for signal pole foundations, controller foundations, conduit and other items may be adjusted to better fit field conditions as approved.

680-3 High pressure sodium lamps shall meet ANSI C78 requirements and shall be the type that extinguishes at the end of usable lamp life and remains extinguished without cycling. 400 watt lamps shall contain less that 4.0 MG of mercury. 250 watt lamps shall contain less than 3.0 MG of mercury. Lamps shall be lead free. Lamps shall pass the Federal Toxic Characteristic Leachate Producure (TCLP). Lamp examples: OSRAM-Sylvania LU400/ECO Plus.

REV. NO.	DATE	DESCRIPTION	BY

PAPE-DAWSON ENGINEERS
SAN ANTONIO | AUSTIN | HOUSTON | FORT WORTH | DALLAS
2000 NW LOOP 410 | SAN ANTONIO, TX 78213 | 210.375.9000
TBPE FIRM REGISTRATION #470 | TBPLS FIRM REGISTRATION #10028800

City of New Braunfels

KLEIN RD PHASE 2

GENERAL NOTES

SHEET 10 OF 11

DGN:	STATE	PROJECT NO.	ROADWAY
CHK DGN:	TEXAS	NB 18-026	KLEIN RD
DWG:	COUNTY	CITY	SHEET NO.
CHK DWG:	GUADALUPE	NEW BRAUNFELS	12

Design Filename: H:\Projects\510\30\03\Design\Civil\General\5103003_GeneralNotes.dgn

Plotted on: 1/9/2020

Control: N/A

County: Guadalupe

Highway: Klein Rd Ph 2

680-4 Demonstrate that the field wiring is properly installed, install the controller assembly, connect the wiring and turn on the controller.

680-5 **A**ll existing signal equipment with the exception of the signal controller and related equipment become the property of the Contractor. Deliver the controller and related equipment to the Signal shop, located at 4615 NW Loop 410 (corner of IH 410 and Callaghan Road) in San Antonio, Texas or to the Area Office as directed.

--Item 682--

682-1 Provide all signal heads from the same manufacturer. Pedestrian signals may be by a different manufacturer than the vehicle signal heads.

682-2 Cover all signal faces until placed in operation.

682-3 All pedestrian signal faces shall be single section LED Type. Die cast polycarbonate is acceptable in lieu of die cast aluminum. All mounting attachments shall be constructed of steel pipe and mounted as shown on the plans.

--Item 684--

684-1 Provide an extra 10' for each cable terminating in the controller cabinet. All cables shall be continuous without splices from terminal point to terminal point. All proposed signal cable shall be #12 AWG stranded copper.

--Item 686 & 687--

686-1 Provide all signal poles from the same manufacturer. Pedestrian poles may be from a different manufacturer.

--Item 6001--

Provide messages as directed by the Engineer.

Provide 2 solar powered changeable message signs for this project.

Design Filename: H:\Projects\510\30\03\Design\Civil\General\5103003_GeneralNotes.dgn

REV. NO.	DATE	DESCRIPTION	BY

PAPE-DAWSON ENGINEERS
SAN ANTONIO | AUSTIN | HOUSTON | FORT WORTH | DALLAS
2000 NW LOOP 410 | SAN ANTONIO, TX 78213 | 210.375.9000
TBPE FIRM REGISTRATION #470 | TBPLS FIRM REGISTRATION #10028800

City of New Braunfels

KLEIN RD PHASE 2

GENERAL NOTES

SHEET 11 OF 11

DGN:	STATE	PROJECT NO.	ROADWAY
CHK DGN:	TEXAS	NB 18-026	KLEIN RD
DWG:	COUNTY	CITY	SHEET NO.
CHK DWG:	GUADALUPE	NEW BRAUNFELS	13

Plotted on: 1/9/2020

Design Filename: H:\Projects\510\30\03\Design\Civil\General\5103003_EQ.dgn

ESTIMATE SUMMARY

NB 18-026 KLEIN ROAD PH 2		ALT	ITEM-CODE			DESCRIPTION	UNIT	TOTAL	
EST.	FINAL		ITEM NO		SP NO			EST.	FINAL

DESIGN

INTERIM REVIEW

DOCUMENT INCOMPLETE. NOT INTENDED FOR PERMIT, BIDDING OR CONSTRUCTION.
ENGINEER: TYLER PAYNE DUBE
P.E. SERIAL NO: 118612
DATE: 1/9/2020

APPROVAL

INTERIM REVIEW

DOCUMENT INCOMPLETE. NOT INTENDED FOR PERMIT, BIDDING OR CONSTRUCTION.
ENGINEER: JOHN A. TYLER
P.E. SERIAL NO: 105193
DATE: 1/9/2020

REV.NO.	DATE	DESCRIPTION	BY

PAPE-DAWSON ENGINEERS

SAN ANTONIO | AUSTIN | HOUSTON | FORT WORTH | DALLAS
2000 NW LOOP 410 | SAN ANTONIO, TX 78213 | 210.375.9000
TBPE FIRM REGISTRATION #470 | TBPLS FIRM REGISTRATION #10028800

City of New Braunfels

KLEIN RD PHASE 2

ESTIMATE AND QUANTITY

DGN:	STATE	PROJECT NO.	ROADWAY
CHK DGN:	TEXAS	NB 18-026	KLEIN RD
DWG:	COUNTY	CITY	SHEET NO.
CHK DWG:	GUADALUPE	NEW BRAUNFELS	14

Plotted on: 1/9/2020

Design Filename: H:\Projects\510\30\03\Design\Civil\Summaries\5103003_Summaries.dgn

TEMPORARY TRAFFIC CONTROL

	ITEM	0508-6001	0512-6009	0512-6010	0512-6033	0512-6034	0512-6045	0512-6057	0512-6058	0662-6004	0662-6016
SHT NO	INTERSECTION	CONSTRUCTING DETOURS	PORT CTB (FUR & INST) (LOW PROF) (TY 1)	PORT CTB (FUR & INST) (LOW PROF) (TY 2)	PORT CTB (MOVE) (LOW PROF) (TY 1)	PORT CTB (MOVE) (LOW PROF) (TY 2)	PORT CTB (STKPL) (LOW PROF) (TY 1)	PORT CTB (REMOVE) (LOW PROF) (TY 1)	PORT CTB (REMOVE) (LOW PROF) (TY 2)	WK ZN PAV MRK NON-REMOV (W)4" (SLD)	WK ZN PAV MRK NON-REMOV (W)24" (SLD)
		SY	LF	LF	LF	LF	LF	LF	LF	LF	LF
44	TRAFFIC CONTROL PLAN PHASE 1 STEP 1		335	20			335				
45	TRAFFIC CONTROL PLAN PHASE 1 STEP 1		125	20			85				
47	TRAFFIC CONTROL PLAN PHASE 1 STEP 2				40	40				237	
48	TRAFFIC CONTROL PLAN PHASE 1 STEP 2	135								316	
49	TRAFFIC CONTROL PLAN PHASE 1 STEP 2	11									
51	TRAFFIC CONTROL PLAN PHASE 2 STEP 1										
52	TRAFFIC CONTROL PLAN PHASE 2 STEP 1									118	
53	TRAFFIC CONTROL PLAN PHASE 2 STEP 1	202			188	20		188	20	600	
54	TRAFFIC CONTROL PLAN PHASE 2 STEP 1	606	103	40	272	20		375	60	600	
55	TRAFFIC CONTROL PLAN PHASE 2 STEP 1	696	536	40				536	40	600	
56	TRAFFIC CONTROL PLAN PHASE 2 STEP 1	733	392	80				392	80	524	
57	TRAFFIC CONTROL PLAN PHASE 2 STEP 1	696	534	40				534	40	600	
58	TRAFFIC CONTROL PLAN PHASE 2 STEP 1	736	433	80				433	80	536	
59	TRAFFIC CONTROL PLAN PHASE 2 STEP 1	623	463	60				463	60	554	
60	TRAFFIC CONTROL PLAN PHASE 2 STEP 1	731	380	40				380	40	572	
61	TRAFFIC CONTROL PLAN PHASE 2 STEP 1	704	553	20				553	20	573	
62	TRAFFIC CONTROL PLAN PHASE 2 STEP 1	512	325	40				325	40	550	
63	TRAFFIC CONTROL PLAN PHASE 2 STEP 1	2								599	
64	TRAFFIC CONTROL PLAN PHASE 2 STEP 1									605	
65	TRAFFIC CONTROL PLAN PHASE 2 STEP 1									518	
66	TRAFFIC CONTROL PLAN PHASE 2 STEP 1	152	60	46				60	46	600	
67	TRAFFIC CONTROL PLAN PHASE 2 STEP 1	128	286	14				286	14	600	
68	TRAFFIC CONTROL PLAN PHASE 2 STEP 1	16	94	60				94	60	600	
69	TRAFFIC CONTROL PLAN PHASE 2 STEP 1	53	60	40				60	40	253	10
70	TRAFFIC CONTROL PLAN PHASE 2 STEP 2										
71	TRAFFIC CONTROL PLAN PHASE 2 STEP 2										
72	TRAFFIC CONTROL PLAN PHASE 2 STEP 2									439	
73	TRAFFIC CONTROL PLAN PHASE 2 STEP 2									600	
74	TRAFFIC CONTROL PLAN PHASE 2 STEP 2									600	
75	TRAFFIC CONTROL PLAN PHASE 2 STEP 2									482	
76	TRAFFIC CONTROL PLAN PHASE 2 STEP 2									600	
77	TRAFFIC CONTROL PLAN PHASE 2 STEP 2									508	
78	TRAFFIC CONTROL PLAN PHASE 2 STEP 2									519	
79	TRAFFIC CONTROL PLAN PHASE 2 STEP 2									570	
80	TRAFFIC CONTROL PLAN PHASE 2 STEP 2									570	
81	TRAFFIC CONTROL PLAN PHASE 2 STEP 2									442	
82	TRAFFIC CONTROL PLAN PHASE 2 STEP 2									600	
83	TRAFFIC CONTROL PLAN PHASE 2 STEP 2									602	
84	TRAFFIC CONTROL PLAN PHASE 2 STEP 2									493	
85	TRAFFIC CONTROL PLAN PHASE 2 STEP 2									600	
86	TRAFFIC CONTROL PLAN PHASE 2 STEP 2									600	
87	TRAFFIC CONTROL PLAN PHASE 2 STEP 2									600	
88	TRAFFIC CONTROL PLAN PHASE 2 STEP 2									240	11
	TOTALS	6736	4679	640	500	80	420	4679	640	19220	21

DEMOLITION

	ITEM	0100-6002
SHT NO	INTERSECTION	PREPARING ROW
		STA
28	DEMOLITION PLAN	4.2
29	DEMOLITION PLAN	6.0
30	DEMOLITION PLAN	6.0
31	DEMOLITION PLAN	6.0
32	DEMOLITION PLAN	6.0
33	DEMOLITION PLAN	6.0
34	DEMOLITION PLAN	6.0
35	DEMOLITION PLAN	6.0
36	DEMOLITION PLAN	4.4
	TOTALS	50.6

REV. NO.	DATE	DESCRIPTION	BY

PAPE-DAWSON ENGINEERS
SAN ANTONIO | AUSTIN | HOUSTON | FORT WORTH | DALLAS
2000 NW LOOP 410 | SAN ANTONIO, TX 78213 | 210.375.9000
TBPE FIRM REGISTRATION #470 | TBPLS FIRM REGISTRATION #10028800

City of New Braunfels

KLEIN RD PHASE 2

SUMMARIES

SHEET 1 OF 7

DGN:	STATE	PROJECT NO.	ROADWAY
CHK DGN:	TEXAS	NB 18-026	KLEIN RD
DWG:	COUNTY	CITY	SHEET NO.
CHK DWG:	GUADALUPE	NEW BRAUNFELS	15

TEMPORARY TRAFFIC CONTROL CONT'D

SHT NO	INTERSECTION	0662-6034 WK ZN PAV MRK NON-REMOV (Y)4"(SLD) LF	0662-6063 WK ZN PAV MRK REMOV (W)4"(SLD) LF	0662-6071 WK ZN PAV MRK REMOV (W)8"(SLD) LF	0662-6095 WK ZN PAV MRK REMOV (Y)4"(SLD) LF	0677-6001 ELIM EXT PAV MRK & MRKS (4") LF	0677-6003 ELIM EXT PAV MRK & MRKS (8") LF	0677-6007 ELIM EXT PAV MRK & MRKS (24") LF	0677-6008 ELIM EXT PAV MRK & MRKS (ARROW) EA	0677-6012 ELIM EXT PAV MRK & MRKS (WORD) EA	0677-6020 ELIM EXT PAV MRK & MRKS (MED NOSE) EA
44	TRAFFIC CONTROL PLAN PHASE 1 STEP 1										
45	TRAFFIC CONTROL PLAN PHASE 1 STEP 1										
47	TRAFFIC CONTROL PLAN PHASE 1 STEP 2	332									
48	TRAFFIC CONTROL PLAN PHASE 1 STEP 2	345				350					
49	TRAFFIC CONTROL PLAN PHASE 1 STEP 2					80					
51	TRAFFIC CONTROL PLAN PHASE 2 STEP 1		47		150	10					
52	TRAFFIC CONTROL PLAN PHASE 2 STEP 1	236	105		105	80	83	64	1	1	1
53	TRAFFIC CONTROL PLAN PHASE 2 STEP 1	320				20					
54	TRAFFIC CONTROL PLAN PHASE 2 STEP 1	600									
55	TRAFFIC CONTROL PLAN PHASE 2 STEP 1	600									
56	TRAFFIC CONTROL PLAN PHASE 2 STEP 1	449									
57	TRAFFIC CONTROL PLAN PHASE 2 STEP 1	600									
58	TRAFFIC CONTROL PLAN PHASE 2 STEP 1	469									
59	TRAFFIC CONTROL PLAN PHASE 2 STEP 1	511									
60	TRAFFIC CONTROL PLAN PHASE 2 STEP 1	543									
61	TRAFFIC CONTROL PLAN PHASE 2 STEP 1	546									
62	TRAFFIC CONTROL PLAN PHASE 2 STEP 1	514									
63	TRAFFIC CONTROL PLAN PHASE 2 STEP 1	599									
64	TRAFFIC CONTROL PLAN PHASE 2 STEP 1	608									
65	TRAFFIC CONTROL PLAN PHASE 2 STEP 1	435									
66	TRAFFIC CONTROL PLAN PHASE 2 STEP 1	300				350					
67	TRAFFIC CONTROL PLAN PHASE 2 STEP 1	600				680					
68	TRAFFIC CONTROL PLAN PHASE 2 STEP 1	600				1000		120			
69	TRAFFIC CONTROL PLAN PHASE 2 STEP 1	253				170					
70	TRAFFIC CONTROL PLAN PHASE 2 STEP 2		171	173	331		165				
71	TRAFFIC CONTROL PLAN PHASE 2 STEP 2		301	208	627	30	85				
72	TRAFFIC CONTROL PLAN PHASE 2 STEP 2	634		112							
73	TRAFFIC CONTROL PLAN PHASE 2 STEP 2	600									
74	TRAFFIC CONTROL PLAN PHASE 2 STEP 2	600									
75	TRAFFIC CONTROL PLAN PHASE 2 STEP 2	364									
76	TRAFFIC CONTROL PLAN PHASE 2 STEP 2	600									
77	TRAFFIC CONTROL PLAN PHASE 2 STEP 2	417									
78	TRAFFIC CONTROL PLAN PHASE 2 STEP 2	365									
79	TRAFFIC CONTROL PLAN PHASE 2 STEP 2	540									
80	TRAFFIC CONTROL PLAN PHASE 2 STEP 2	540									
81	TRAFFIC CONTROL PLAN PHASE 2 STEP 2	442									
82	TRAFFIC CONTROL PLAN PHASE 2 STEP 2	600									
83	TRAFFIC CONTROL PLAN PHASE 2 STEP 2	600									
84	TRAFFIC CONTROL PLAN PHASE 2 STEP 2	387									
85	TRAFFIC CONTROL PLAN PHASE 2 STEP 2	600									
86	TRAFFIC CONTROL PLAN PHASE 2 STEP 2	600									
87	TRAFFIC CONTROL PLAN PHASE 2 STEP 2	600									
88	TRAFFIC CONTROL PLAN PHASE 2 STEP 2	240									
	TOTALS	18189	624	493	1213	2770	333	184	1	1	1

REV. NO.	DATE	DESCRIPTION	BY

PAPE-DAWSON ENGINEERS

SAN ANTONIO | AUSTIN | HOUSTON | FORT WORTH | DALLAS

2000 NW LOOP 410 | SAN ANTONIO, TX 78213 | 210.375.9000

TBPE FIRM REGISTRATION #470 | TBPLS FIRM REGISTRATION #10028800

City of New Braunfels

KLEIN RD PHASE 2

SUMMARIES

SHEET 2 OF 7

DGN:	STATE	PROJECT NO.	ROADWAY
CHK DGN:	TEXAS	NB 18-026	KLEIN RD
DWG:	COUNTY	CITY	SHEET NO.
CHK DWG:	GUADALUPE	NEW BRAUNFELS	16

Plotted on: 1/9/2020

Design Filename: H:\Projects\510\30\03\Design\Civil\Summaries\5103003_Summaries.dgn

Plotted on: 1/9/2020

Design Filename: H:\Projects\510\30\03\Design\Civil\Summaries\5103003_Summaries.dgn

ROADWAY

	ITEM	500.1	0110-6001	0132-6005	0160-6003	0162-6002	0168-6001	0247-6041	0260-6001	0260-6011	0310-6001
SHT NO	INTERSECTION	Concrete Curb	EXCAVATION (ROADWAY)	EMBANKMENT (FINAL) (ORD COMP) (TY C)	FURNISHING AND PLACING TOPSOIL (4")	BLOCK SODDING	VEGETATIVE WATERING	FL BS (CMP IN PLC) (TYA GR1&2) (FNAL POS)	LIME (HYDRATED LIME (DRY))	LIME TRT (EXST MATL) (12")	PRIME COAT (MULTI OPTION)
		LF	CY	CY	SY	SY	MG	CY	TON	SY	GAL
117	ROADWAY PLAN & PROFILE	134	108	19	503	503	7.90	96	3.8	256	63.30
118	ROADWAY PLAN & PROFILE	581	1519	167	1080	1080	16.90	829	37.3	2485	553.80
119	ROADWAY PLAN & PROFILE	600	1797	4	1183	1183	18.50	838	33.1	2203	588.90
120	ROADWAY PLAN & PROFILE	600	2192		783	783	12.30	864	33.9	2262	620.10
121	ROADWAY PLAN & PROFILE	619	2109	37	793	793	12.40	959	37.6	2505	694.50
122	ROADWAY PLAN & PROFILE	600	1811	2	784	784	12.30	864	33.9	2262	620.10
123	ROADWAY PLAN & PROFILE	687	2036	46	600	600	9.40	987	38.7	2582	708.30
124	ROADWAY PLAN & PROFILE	651	1290	27	543	543	8.50	777	30.6	2041	549.60
125	ROADWAY PLAN & PROFILE	619	1168	51	327	327	5.20	674	26.6	1773	473.40
126	ROADWAY PLAN & PROFILE	618	1351	18	371	371	5.80	674	26.6	1773	473.40
127	ROADWAY PLAN & PROFILE	674	1247	127	384	384	6.00	774	30.5	2034	545.40
128	ROADWAY PLAN & PROFILE	220	42	2188				241	9.5	634	168.90
129	ROADWAY PLAN & PROFILE	496	126	3800	1005	1005	15.70	711	27.9	1860	510.30
130	ROADWAY PLAN & PROFILE	636	201	1623	672	672	10.50	1027	40.7	2716	702.60
131	ROADWAY PLAN & PROFILE	601	1571	175	640	640	10.00	822	32.7	2180	552.90
132	ROADWAY PLAN & PROFILE	600	1895	72	505	505	7.90	1019	40.1	2670	700.80
133	ROADWAY PLAN & PROFILE	600	2401	13	440	440	6.90	1046	40.9	2728	760.20
134	ROADWAY PLAN & PROFILE	291		24	360	360	5.70	624	24.4	1623	459.00
	TOTALS	9827	22864	8393	10973	10973	171.90	13826	548.8	36587	9745.50

	ITEM	0341-6028	0341-6049	0341-6281	0530-6004	0531-6001	0531-6005	0531-6006	0531-6010	0536-6002	0540-6001
SHT NO	INTERSECTION	D-GR HMA TY-C PG70-22	D-GR HMA TY-D PG76-22	TACK COAT	DRIVEWAYS (CONC)	CONC SIDEWALKS (4")	CURB RAMPS (TY 2)	CURB RAMPS (TY 3)	CURB RAMPS (TY 7)	CONC MEDIAN	MTL W-BEAM GD FEN (TIM POST)
		TON	TON	GAL	SY	SY	EA	EA	EA	SY	LF
117	ROADWAY PLAN & PROFILE	35.0	35.0	42.20		296		1		31	
118	ROADWAY PLAN & PROFILE	305.0	305.0	369.20	18	524				321	
119	ROADWAY PLAN & PROFILE	324.0	324.0	392.60	80	520				105	
120	ROADWAY PLAN & PROFILE	341.0	341.0	413.40	41	534					
121	ROADWAY PLAN & PROFILE	382.0	382.0	463.00	82	539	2				
122	ROADWAY PLAN & PROFILE	341.0	341.0	413.40	52	534					
123	ROADWAY PLAN & PROFILE	390.0	390.0	472.20		564	2				
124	ROADWAY PLAN & PROFILE	302.0	302.0	366.40	8	339		2			
125	ROADWAY PLAN & PROFILE	260.0	260.0	315.60	65	434	1				
126	ROADWAY PLAN & PROFILE	260.0	260.0	315.60		434	1				
127	ROADWAY PLAN & PROFILE	300.0	300.0	363.60		464	2	2			
128	ROADWAY PLAN & PROFILE	93.0	93.0	112.60	195	165					25
129	ROADWAY PLAN & PROFILE	281.0	281.0	340.20		465					
130	ROADWAY PLAN & PROFILE	386.0	386.0	468.40		474	3	1		366	
131	ROADWAY PLAN & PROFILE	304.0	304.0	368.60	50	449				360	
132	ROADWAY PLAN & PROFILE	385.0	385.0	467.20	57	534				198	
133	ROADWAY PLAN & PROFILE	418.0	418.0	506.80	194	454					
134	ROADWAY PLAN & PROFILE	252.0	252.0	306.00		235			4		
	TOTALS	5359.0	5359.0	6497.00	842	7958	11	6	4	1381	25

	ITEM	0540-6007	0544-6001	0560-6014	5001-6002	6210-XXXX
SHT NO	INTERSECTION	MTL BEAM GD FEN TRANS (TL2)	GUARDRAIL END TREATMENT (INSTALL)	MAILBOX INSTALL-S (TWG-POST) TY 4	GEOGRID BASE REINFORCEMENT (TY II)	PVC MOISTURE BARRIER
		EA	EA	EA	SY	SY
117	ROADWAY PLAN & PROFILE				256	
118	ROADWAY PLAN & PROFILE			1	2485	115
119	ROADWAY PLAN & PROFILE			2	2203	124
120	ROADWAY PLAN & PROFILE			1	2262	124
121	ROADWAY PLAN & PROFILE			1	2505	124
122	ROADWAY PLAN & PROFILE			1	2262	124
123	ROADWAY PLAN & PROFILE				2582	124
124	ROADWAY PLAN & PROFILE			1	2041	144
125	ROADWAY PLAN & PROFILE			1	1773	124
126	ROADWAY PLAN & PROFILE				1773	124
127	ROADWAY PLAN & PROFILE				2034	130
128	ROADWAY PLAN & PROFILE	1	1		634	21
129	ROADWAY PLAN & PROFILE				1860	102
130	ROADWAY PLAN & PROFILE				2716	124
131	ROADWAY PLAN & PROFILE				2180	124
132	ROADWAY PLAN & PROFILE				2670	124
133	ROADWAY PLAN & PROFILE				2728	124
134	ROADWAY PLAN & PROFILE				1623	58
	TOTALS	1	1	8	36587	1934

REV. NO.	DATE	DESCRIPTION	BY

PAPE-DAWSON ENGINEERS
SAN ANTONIO | AUSTIN | HOUSTON | FORT WORTH | DALLAS
2000 NW LOOP 410 | SAN ANTONIO, TX 78213 | 210.375.9000
TBPE FIRM REGISTRATION #470 | TBPLS FIRM REGISTRATION #10028800

City of New Braunfels

KLEIN RD PHASE 2

SUMMARIES

SHEET 3 OF 7

DGN:	STATE	PROJECT NO.	ROADWAY
CHK DGN:	TEXAS	NB 18-026	KLEIN RD
DWG:	COUNTY	CITY	SHEET NO.
CHK DWG:	GUADALUPE	NEW BRAUNFELS	17

Plotted on: 1/9/2020

TRAFFIC

	ITEM	0644-6001	0644-6004	0644-6007	0644-6060	0644-6061	0666-6036	0666-6048	0666-6054	0666-6078	0666-6090
SHT NO	INTERSECTION	IN SM RD SN SUP&AM TY10BWG(1)SA(P)	IN SM RD SN SUP&AM TY10BWG(1)SA(T)	IN SM RD SN SUP&AM TY10BWG(1)SA(U)	IN SM RD SN SUP&AM TYTWT(1)WS(P)	IN SM RD SN SUP&AM TYTWT(1)WS(T)	REFL PAV MRK TY I (W)8"(SLD)(100MIL)	REFL PAV MRK TY I (W)24"(SLD)(100MIL)	REFL PAV MRK TY I (W)(ARROW)(100MIL)	REFL PAV MRK TY I (W)(WORD)(100MIL)	REF PAV MRK TY I (W)(MED NOSE)(100MIL)
		EA	EA	EA	EA	EA	LF	LF	EA	EA	EA
167	SIGNING AND PAVEMENT MARKING	1	1			2	325		3	3	1
168	SIGNING AND PAVEMENT MARKING				3		252		1	1	1
169	SIGNING AND PAVEMENT MARKING	1					316	22	2	2	1
170	SIGNING AND PAVEMENT MARKING	2			1		76	40	1	1	1
171	SIGNING AND PAVEMENT MARKING	1			2			14			
172	SIGNING AND PAVEMENT MARKING	2						28			
173	SIGNING AND PAVEMENT MARKING	4			1		170	114	2	2	
174	SIGNING AND PAVEMENT MARKING	1		1	6		414		4	4	
175	SIGNING AND PAVEMENT MARKING				1	1	560	340	4	4	2
	TOTALS	12	1	1	14	3	2113	558	17	17	6

	ITEM	0666-6147	0666-6224	0666-6226	0666-6230	0666-6231	0666-6232	0666-6233	0666-6300	0666-6303	0666-6312
SHT NO	INTERSECTION	REFL PAV MRK TY I (Y)24"(SLD)(100MIL)	PAVEMENT SEALER 4"	PAVEMENT SEALER 8"	PAVEMENT SEALER 24"	PAVEMENT SEALER (ARROW)	PAVEMENT SEALER (WORD)	PAVEMENT SEALER (MED NOSE)	RE PM W/RET REQ TY I (W)4"(BRK)(100MIL)	RE PM W/RET REQ TY I (W)4"(SLD)(100MIL)	RE PM W/RET REQ TY I (Y)4"(BRK)(100MIL)
		LF	LF	LF	LF	EA	EA	EA	LF	LF	LF
167	SIGNING AND PAVEMENT MARKING	198	548	325	198	3	3	1	290		
168	SIGNING AND PAVEMENT MARKING	44	1650	252	44	1	1	1	300		110
169	SIGNING AND PAVEMENT MARKING	127	1570	316	149	2	2	1	270		
170	SIGNING AND PAVEMENT MARKING	112	1692	76	152	1	1	1	260		
171	SIGNING AND PAVEMENT MARKING		1370		14				290		
172	SIGNING AND PAVEMENT MARKING	56	1704		84				270		
173	SIGNING AND PAVEMENT MARKING	68	1034	170	182	2	2		270		
174	SIGNING AND PAVEMENT MARKING		300	414		4	4		300		
175	SIGNING AND PAVEMENT MARKING	170	1559	560	510	4	4	2	130	325	
	TOTALS	775	11427	2113	1333	17	17	6	2380	325	110

	ITEM	0666-6315	0672-5009	0672-6007	0672-6009
SHT NO	INTERSECTION	RE PM W/RET REQ TY I (Y)4"(SLD)(100MIL)	REFL PAV MRKR TY II-B-B	REFL PAV MRKR TY I-C	REFL PAV MRKR TY II-A-A
		LF	EA	EA	EA
167	SIGNING AND PAVEMENT MARKING	258	1	45	
168	SIGNING AND PAVEMENT MARKING	1240		43	42
169	SIGNING AND PAVEMENT MARKING	1300		43	66
170	SIGNING AND PAVEMENT MARKING	1432		30	72
171	SIGNING AND PAVEMENT MARKING	1080		29	28
172	SIGNING AND PAVEMENT MARKING	1434		27	54
173	SIGNING AND PAVEMENT MARKING	764	1	36	38
174	SIGNING AND PAVEMENT MARKING			51	
175	SIGNING AND PAVEMENT MARKING	1104		13	56
	TOTALS	8612	2	317	356

REV. NO.	DATE	DESCRIPTION	BY

PAPE-DAWSON ENGINEERS

SAN ANTONIO | AUSTIN | HOUSTON | FORT WORTH | DALLAS

2000 NW LOOP 410 | SAN ANTONIO, TX 78213 | 210.375.9000

TBPE FIRM REGISTRATION #470 | TBPLS FIRM REGISTRATION #10028800

City of New Braunfels

KLEIN RD PHASE 2

SUMMARIES

SHEET 4 OF 7

DGN:	STATE	PROJECT NO.	ROADWAY
CHK DGN:	TEXAS	NB 18-026	KLEIN RD
DWG:	COUNTY	CITY	SHEET NO.
CHK DWG:	GUADALUPE	NEW BRAUNFELS	18

Design Filename: H:\Projects\510\30\03\Design\Civil\Summaries\5103003_Summaries.dgn

DRAINAGE

SHT NO	ITEM / INTERSECTION	0110-6002 EXCAVATION (CHANNEL) CY	0400-6002 STRUCT EXCAV (BOX) CY	0400-6003 STRUCT EXCAV (PIPE) CY	0402-6001 TRENCH EXCAVATION PROTECTION LF	0420-6071 CL C CONC (COLLAR) EA	0432-6003 RIPRAP (CONC)(6 IN) CY	0432-6044 RIPRAP (CONC)(FLUME) CY	0462-6006 CONC BOX CULV (5 FT X 2 FT) LF	0462-6007 CONC BOX CULV (5 FT X 3 FT) LF	0462-6008 CONC BOX CULV (5 FT X 4 FT) LF
203	DRAINAGE PLAN & PROFILE		69.0	22.0	41	1	5.0		25		
204	DRAINAGE PLAN & PROFILE		2779.0	300.0	897				215	507	
206	DRAINAGE PLAN & PROFILE		908.0	110.0	265					192	
207	DRAINAGE PLAN & PROFILE		1491.0	89.0	398					342	
208	DRAINAGE PLAN & PROFILE		977.0	83.0	308					252	
209	DRAINAGE PLAN & PROFILE		1302.0	223.0	502			4.0		353	
210	DRAINAGE PLAN & PROFILE		1523.0	57.0	450					409	
211	DRAINAGE PLAN & PROFILE		800.0	58.0	259					219	
212	DRAINAGE PLAN & PROFILE		940.0	16.0	257					247	
213	DRAINAGE PLAN & PROFILE		534.0	58.0	213						173
214	DRAINAGE PLAN & PROFILE	20.0	191.0	42.0	180		12.0				111
215	DRAINAGE PLAN & PROFILE	86.0	504.0	56.0	456					370	
216	DRAINAGE PLAN & PROFILE		363.0	45.0	255			14.0		197	
217	DRAINAGE PLAN & PROFILE		377.0	506.0	442			8.0		144	
218	DRAINAGE PLAN & PROFILE			649.0	401						
219	DRAINAGE PLAN & PROFILE			205.0	196						
	TOTALS	106.0	12758.0	2519.0	5520	1	17.0	26.0	240	3232	284

SHT NO	ITEM / INTERSECTION	0464-6005 RC PIPE (CL III)(24 IN) LF	0464-6007 RC PIPE (CL III)(30 IN) LF	0465-6021 INLET (COMPL)(PCO)(5FT)(NONE) EA	0465-6022 INLET (COMPL)(PCO)(5FT)(LEFT) EA	0465-6023 INLET (COMPL)(PCO)(5FT)(RIGHT) EA	0465-6024 INLET (COMPL)(PCO)(5FT)(BOTH) EA	0465-6070 INLET (COMPL)(PSL)(RC)(3FTX3FT) EA	0465-6077 INLET (COMPL)(PSL)(RC)(8FTX8FT) EA	0465-6146 INLET(COMPL)(PSL)(SFG)(3FTX3FT-3FTX3FT) EA	0465-6147 INLET(COMPL)(PSL)(SFG)(4FTX4FT-4FTX4FT) EA
203	DRAINAGE PLAN & PROFILE	16							1		
204	DRAINAGE PLAN & PROFILE	78	97	3	1	1			2		
206	DRAINAGE PLAN & PROFILE	73			1	1			1		
207	DRAINAGE PLAN & PROFILE	56		2					1		
208	DRAINAGE PLAN & PROFILE	56			1		1		1		
209	DRAINAGE PLAN & PROFILE	149			1		2		3		
210	DRAINAGE PLAN & PROFILE	41		1			1		1		
211	DRAINAGE PLAN & PROFILE	40					2		1		
212	DRAINAGE PLAN & PROFILE	10					1		1		
213	DRAINAGE PLAN & PROFILE	40					2		1		
214	DRAINAGE PLAN & PROFILE	69					2		2		
215	DRAINAGE PLAN & PROFILE	86					4		2		
216	DRAINAGE PLAN & PROFILE	58					2		1	1	
217	DRAINAGE PLAN & PROFILE	253	45		1		2		2		1
218	DRAINAGE PLAN & PROFILE	401					2	1			
219	DRAINAGE PLAN & PROFILE	196					3	2			
	TOTALS	1622	142	6	5	2	24	3	20	1	1

SHT NO	ITEM / INTERSECTION	0465-6154 INLET (COMPL)(PAZD)(RC)(5FTX5FT) EA	0466-6097 HEADWALL (CH - PW - 0) (DIA= 24 IN) EA	0466-6179 WINGWALL (PW - 1) (HW=4 FT) EA	0466-6180 WINGWALL (PW - 1) (HW=5 FT) EA	0467-6391 SET (TY II) (24 IN) (RCP) (4: 1) (P) EA
203	DRAINAGE PLAN & PROFILE	1				
204	DRAINAGE PLAN & PROFILE	1				
206	DRAINAGE PLAN & PROFILE	1				
207	DRAINAGE PLAN & PROFILE					
208	DRAINAGE PLAN & PROFILE					
209	DRAINAGE PLAN & PROFILE	1				
210	DRAINAGE PLAN & PROFILE					
211	DRAINAGE PLAN & PROFILE					
212	DRAINAGE PLAN & PROFILE					
213	DRAINAGE PLAN & PROFILE					
214	DRAINAGE PLAN & PROFILE		1		1	1
215	DRAINAGE PLAN & PROFILE			1		
216	DRAINAGE PLAN & PROFILE					
217	DRAINAGE PLAN & PROFILE					
218	DRAINAGE PLAN & PROFILE					
219	DRAINAGE PLAN & PROFILE					
	TOTALS	4	1	1	1	1

REV. NO.	DATE	DESCRIPTION	BY

PAPE-DAWSON ENGINEERS
SAN ANTONIO | AUSTIN | HOUSTON | FORT WORTH | DALLAS
2000 NW LOOP 410 | SAN ANTONIO, TX 78213 | 210.375.9000
TBPE FIRM REGISTRATION #470 | TBPLS FIRM REGISTRATION #10028800

City of New Braunfels

KLEIN RD PHASE 2

SUMMARIES

SHEET 5 OF 7

DGN:	STATE	PROJECT NO.	ROADWAY
CHK DGN:	TEXAS	NB 18-026	KLEIN RD
DWG:	COUNTY	CITY	SHEET NO.
CHK DWG:	GUADALUPE	NEW BRAUNFELS	19

Plotted on: 1/9/2020

Design Filename: H:\Projects\510\30\03\Design\Civil\Summaries\5103003_Summaries.dgn

STORM WATER POLLUTION PREVENTION PLAN (SW3P)

SHT NO	ITEM / INTERSECTION	0506-6002 ROCK FILTER DAMS (INSTALL) (TY 2) LF	0506-6003 ROCK FILTER DAMS (INSTALL) (TY 3) LF	0506-6011 ROCK FILTER DAMS (REMOVE) LF	0506-6020 CONSTRUCTION EXITS (INSTALL) (TY 1) SY	0506-6024 CONSTRUCTION EXITS (REMOVE) SY	0506-6038 TEMP SEDMT CONT FENCE (INSTALL) LF	0506-6039 TEMP SEDMT CONT FENCE (REMOVE) LF	0506-6041 BIODEG EROSN CONT LOGS (INSTL) (12") LF	0506-6043 BIODEG EROSN CONT LOGS (REMOVE) LF
244	SW3P LAYOUT PHASE 1 STEP 1				111	111				
245	SW3P LAYOUT PHASE 1 STEP 1	15	220	235			100	100	40	40
246	SW3P LAYOUT PHASE 1 STEP 1	20	55	75			245	245	80	80
247	SW3P LAYOUT PHASE 1 STEP 1						356	356	20	
248	SW3P LAYOUT PHASE 1 STEP 1				111	111	25	25	20	20
249	SW3P LAYOUT PHASE 1 STEP 2	15		15			45	45	20	40
250	SW3P LAYOUT PHASE 1 STEP 2				111	111				
251	SW3P LAYOUT PHASE 2 STEP 1						88	88	31	
252	SW3P LAYOUT PHASE 2 STEP 1				111	111	300	300	60	40
253	SW3P LAYOUT PHASE 2 STEP 1	10		10			50	50		
254	SW3P LAYOUT PHASE 2 STEP 1	10		10					20	20
255	SW3P LAYOUT PHASE 2 STEP 1	20		20	156	156			20	20
256	SW3P LAYOUT PHASE 2 STEP 1	10		10					20	20
257	SW3P LAYOUT PHASE 2 STEP 1	10		10	156	156			20	20
258	SW3P LAYOUT PHASE 2 STEP 1	10		10	78	78			20	20
259	SW3P LAYOUT PHASE 2 STEP 1	20		20	78	78			20	20
260	SW3P LAYOUT PHASE 2 STEP 1				78	78			20	20
261	SW3P LAYOUT PHASE 2 STEP 1	20		20	78	78			20	20
265	SW3P LAYOUT PHASE 2 STEP 1						275	275	20	20
266	SW3P LAYOUT PHASE 2 STEP 1						300	300	20	20
267	SW3P LAYOUT PHASE 2 STEP 1						153	153	20	20
268	SW3P LAYOUT PHASE 2 STEP 1				111	111				
269	SW3P LAYOUT PHASE 2 STEP 2									31
270	SW3P LAYOUT PHASE 2 STEP 2				111	111			71	40
272	SW3P LAYOUT PHASE 2 STEP 2								20	20
273	SW3P LAYOUT PHASE 2 STEP 2				111	111			20	20
274	SW3P LAYOUT PHASE 2 STEP 2								20	20
275	SW3P LAYOUT PHASE 2 STEP 2				111	111			110	110
276	SW3P LAYOUT PHASE 2 STEP 2				78	78			87	87
277	SW3P LAYOUT PHASE 2 STEP 2				39	39			20	20
278	SW3P LAYOUT PHASE 2 STEP 2				39	39				
279	SW3P LAYOUT PHASE 2 STEP 2				78	78			20	20
283	SW3P LAYOUT PHASE 2 STEP 2				111	111			20	20
286	SW3P LAYOUT PHASE 2 STEP 2				111	111				
287	SW3P LAYOUT PHASE 3								40	40
288	SW3P LAYOUT PHASE 3									51
	TOTALS	160	275	435	1968	1968	1937	1937	919	919

REV. NO.	DATE	DESCRIPTION	BY

PAPE-DAWSON ENGINEERS

SAN ANTONIO | AUSTIN | HOUSTON | FORT WORTH | DALLAS

2000 NW LOOP 410 | SAN ANTONIO, TX 78213 | 210.375.9000

TBPE FIRM REGISTRATION #470 | TBPLS FIRM REGISTRATION #10028800

City of New Braunfels

KLEIN RD PHASE 2

SUMMARIES

SHEET 6 OF 7

DGN:	STATE	PROJECT NO.	ROADWAY
CHK DGN:	TEXAS	NB 18-026	KLEIN RD
DWG:	COUNTY	CITY	SHEET NO.
CHK DWG:	GUADALUPE	NEW BRAUNFELS	20

Plotted on: 1/9/2020

Design Filename: H:\Projects\510\30\03\Design\Civil\Summaries\5103003_Summaries.dgn

Plotted on: 1/10/2020

Design Filename: H:\Projects\510\30\03\Design\Civil\Summaries\5103003_Summaries.dgn

STRUCTURAL

	ITEM	0400-6005	0416-6004	0420-6013	0420-6025	0422-6001	0422-6013	0422-6015	0425-6036	0425-6038	0450-6034
SHT NO	INTERSECTION	CEM STABIL BKFL	DRILL SHAFT (36 IN)	CL C CONC (ABUT)	CL C CONC (BENT)	REINF CONC SLAB	BRIDGE SIDEWALK	APPROACH SLAB	PRESTR CONC GIRDER (TX34)	PRESTR CONC GIRDER (TX46)	RAIL (TY C402)
		CY	LF	CY	CY	SF	SF	CY	LF	LF	LF
296	TOTALS	81.3	600	67.8	127.9	18852	4104	147.7	945	1490	490
	TOTALS	81.3	600	67.8	127.9	18852	4104	147.7	945	1490	490

	ITEM	0450-6104	0454-6020
SHT NO	INTERSECTION	RAIL (TY PR22)	SEALED EXPANSION JOINT (4 IN) (SEJ - B)
		LF	LF
296	TOTALS	245	140
	TOTALS	245	140

	ITEM	0423-6001	0423-6008	0450-6034	0450-6047
SHT NO	INTERSECTION	RETAINING WALL (MSE)	RETAINING WALL (CAST - IN - PLACE)	RAIL (TY C402)	RAIL (HANDRAIL)(TY A)
		SF	SF	LF	LF
331	RETAINING WALL PLAN & PROFILE	957		193	
332	RETAINING WALL PLAN & PROFILE	759		97	
333	RETAINING WALL PLAN & PROFILE	818			
334	RETAINING WALL PLAN & PROFILE	2393			
335	RETAINING WALL PLAN & PROFILE	1052			
336	RETAINING WALL PLAN & PROFILE	585			
337	RETAINING WALL PLAN & PROFILE		831		167
	TOTALS	6564	831	290	167

INDEFINITE QUANTITIES

	ITEM	0110-6001	0110-6002	0132-6005	0160-6003	0162-6002	0168-6001	0500-6001	0502-6001	0506-6002	0506-6003	0506-6011	0506-6020	0506-6024	0506-6038	0506-6039	0506-6041	0506-6043	6001-6002	XXXX-XXX1	XXXX-XXX2
SHT NO	INDEFINITE QUANTITIES	EXCAVATION (ROADWAY)	EXCAVATION (CHANNEL)	EMBANKMENT (FINAL)(ORD COMP)(TY C)	FURNISHING AND PLACING TOPSOIL (4")	BLOCK SODDING	VEGETATIVE WATERING	MOBILIZATION	BARRICADES, SIGNS AND TRAFFIC HANDLING	ROCK FILTER DAMS (INSTALL) (TY 2)	ROCK FILTER DAMS (INSTALL) (TY 3)	ROCK FILTER DAMS (REMOVE)	CONSTRUCTION EXITS (INSTALL) (TY 1)	CONSTRUCTION EXITS (REMOVE)	TEMP SEDMT CONT FENCE (INSTALL)	TEMP SEDMT CONT FENCE (REMOVE)	BIODEG EROSN CONT LOGS (INSTL) (12")	BIODEG EROSN CONT LOGS (REMOVE)	PORTABLE CHANGEABLE MESSAGE SIGN	TRAFFIC SIGNAL	TEMPORARY TRAFFIC SIGNAL
		CY	CY	CY	SY	SY	MG	LS	MO	LF	LF	LF	SY	SY	LF	LF	LF	LF	EA	LS	LS
×	FORCE ACCOUNT	100	100	100	100	100	1.56	1.0	20	100	50	150	100	100	500	500	100	100	2	1.0	1.0
	TOTALS (CSJ 0915-12-576)	100	100	100	100	100	1.56	1.0	20	100	50	150	100	100	500	500	100	100	2	1.0	1.0

REV. NO.	DATE	DESCRIPTION	BY

PAPE-DAWSON ENGINEERS
SAN ANTONIO | AUSTIN | HOUSTON | FORT WORTH | DALLAS
2000 NW LOOP 410 | SAN ANTONIO, TX 78213 | 210.375.9000
TBPE FIRM REGISTRATION #470 | TBPLS FIRM REGISTRATION #10028800

City of New Braunfels

KLEIN RD PHASE 2

SUMMARIES

SHEET 7 OF 7

DGN:	STATE	PROJECT NO.	ROADWAY
CHK DGN:	TEXAS	NB 18-026	KLEIN RD
DWG:	COUNTY	CITY	SHEET NO.
CHK DWG:	GUADALUPE	NEW BRAUNFELS	21

Plotted on: 1/9/2020

Design Filename: H:\Projects\510\30\03\Design\Civil\General\5103003_ProjectLayout.dgn

CITY OF NEW BRAUNFELS

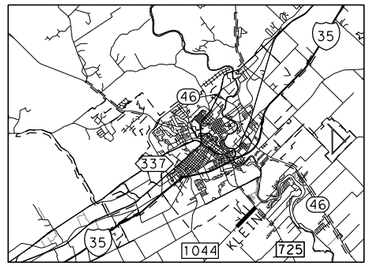

NOT TO SCALE

REV. NO.	DATE	DESCRIPTION	BY

PAPE-DAWSON ENGINEERS
SAN ANTONIO | AUSTIN | HOUSTON | FORT WORTH | DALLAS
2000 NW LOOP 410 | SAN ANTONIO, TX 78213 | 210.375.9000
TBPE FIRM REGISTRATION #470 | TBPLS FIRM REGISTRATION #10028800

City of New Braunfels

KLEIN RD PHASE 2

PROJECT LOCATION MAP

SHEET 1 OF 1

DGN:	STATE	PROJECT NO.	ROADWAY
CHK DGN:	TEXAS	NB 18-026	KLEIN RD
DWG:	COUNTY	CITY	SHEET NO.
CHK DWG:	GUADALUPE	NEW BRAUNFELS	22

Plotted on: 1/9/2020

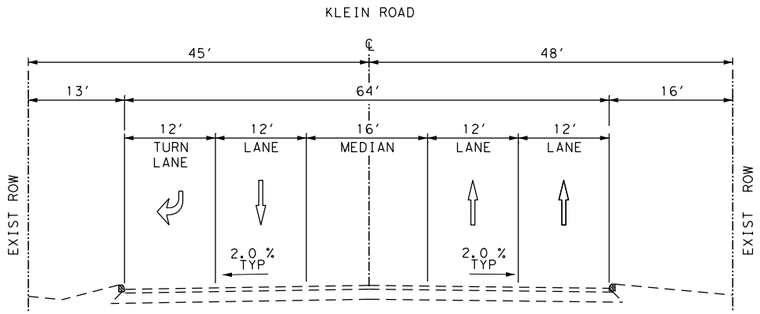

KLEIN RD
STA 102+65 - 103+65

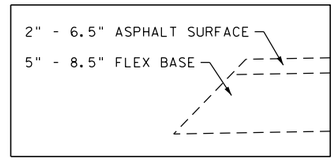

DETAIL "A"
NTS

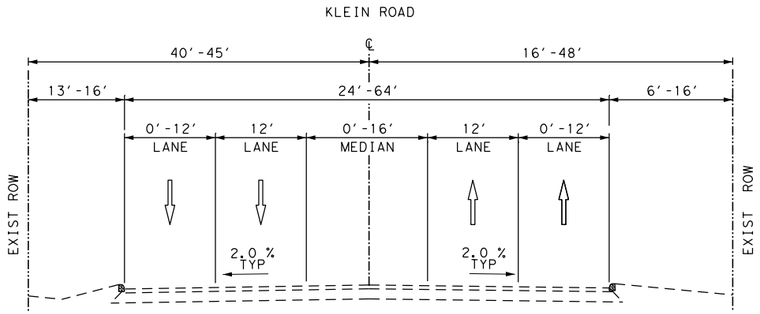

KLEIN RD
STA 103+65 - 111+16

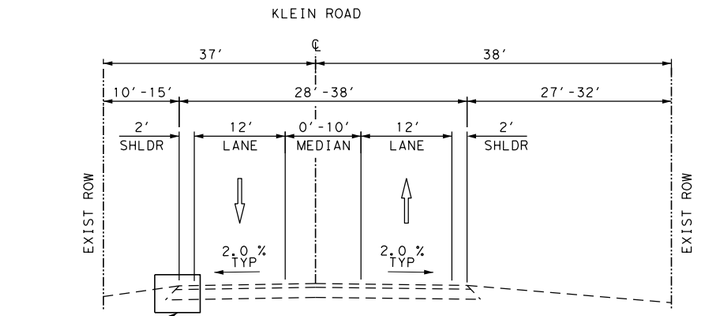

KLEIN RD
STA 148+03 - 151+50

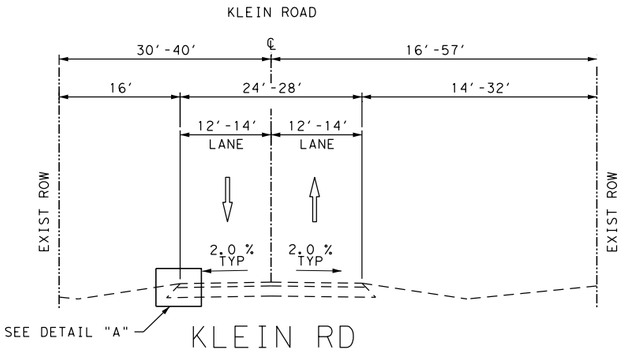

KLEIN RD
STA 111+16 - 148+03

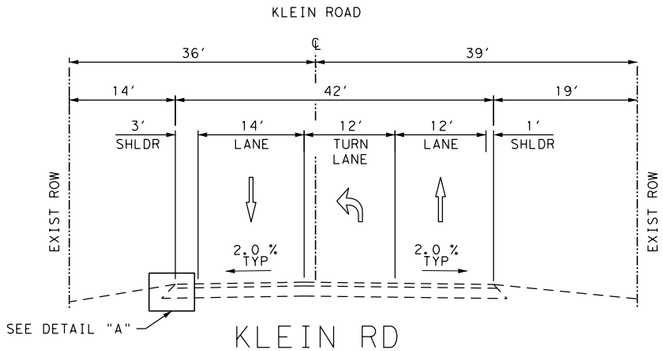

KLEIN RD
STA 151+50 - 152+72

NOTES:

1. PAVEMENT SECTION BASED ON RECOMMENDATIONS FROM GEOTECHNICAL ENGINEERING STUDY (PAVEMENTS FOR KLEIN ROAD RECONSTRUCTION PHASE II SOUTH WALNUT TO FM 725, PREPARED BY RABA KISTNER 12/17/2019).

2. DURING CONSTRUCTION OF PAVEMENT SECTION, ENSURE NO PUNCTURING OF PVC SHEETING OCCURS.

DESIGN

INTERIM REVIEW
DOCUMENT INCOMPLETE. NOT INTENDED FOR PERMIT, BIDDING OR CONSTRUCTION.
ENGINEER: TYLER PAYNE DUBE
P.E. SERIAL NO: 118612
DATE: 1/9/2020

APPROVAL

INTERIM REVIEW
DOCUMENT INCOMPLETE. NOT INTENDED FOR PERMIT, BIDDING OR CONSTRUCTION.
ENGINEER: JOHN A. TYLER
P.E. SERIAL NO: 105193
DATE: 1/9/2020

REV. NO.	DATE	DESCRIPTION	BY

PAPE-DAWSON ENGINEERS
SAN ANTONIO | AUSTIN | HOUSTON | FORT WORTH | DALLAS
2000 NW LOOP 410 | SAN ANTONIO, TX 78213 | 210.375.9000
TBPE FIRM REGISTRATION #470 | TBPLS FIRM REGISTRATION #10028800

City of New Braunfels

KLEIN RD PHASE 2

EXISTING TYPICAL SECTIONS

SHEET 1 OF 1

DGN:	STATE	PROJECT NO.	ROADWAY
CHK DGN:	TEXAS	NB 18-026	KLEIN RD
DWG:	COUNTY	CITY	SHEET NO.
CHK DWG:	GUADALUPE	NEW BRAUNFELS	23

Design Filename: H:\Projects\510\30\03\Design\Civil\General\5103003typ.dgn

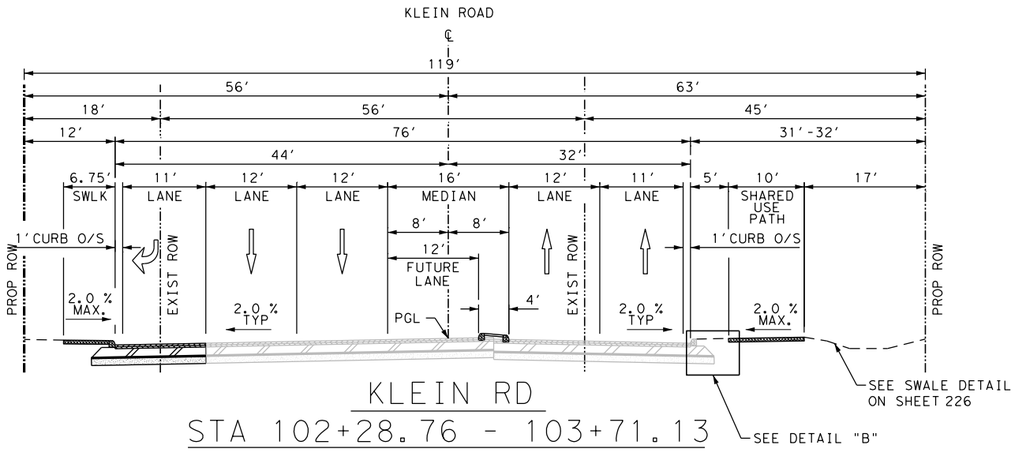

KLEIN RD

STA 102+28.76 - 103+71.13

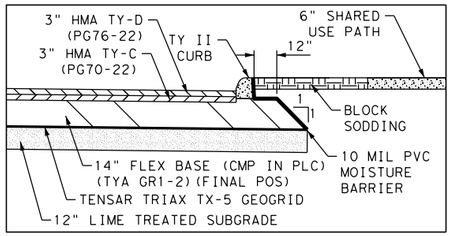

DETAIL "B"

NTS

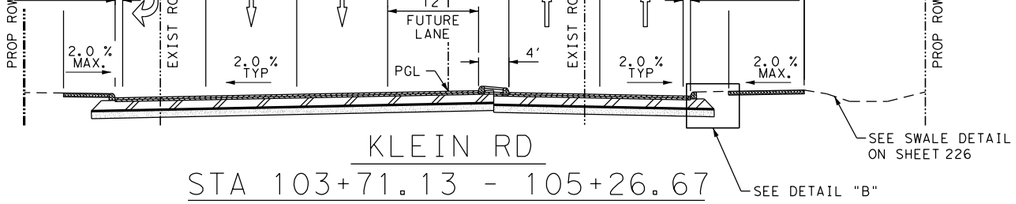

KLEIN RD

STA 103+71.13 - 105+26.67

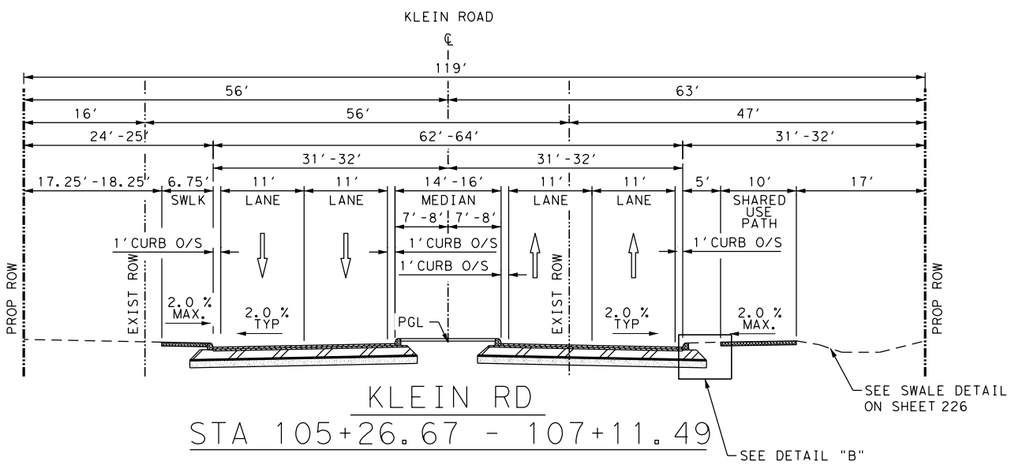

KLEIN RD

STA 105+26.67 - 107+11.49

NOTES:

1. PAVEMENT SECTION BASED ON RECOMMENDATIONS FROM GEOTECHNICAL ENGINEERING STUDY (PAVEMENTS FOR KLEIN ROAD RECONSTRUCTION PHASE II SOUTH WALNUT TO FM 725, PREPARED BY RABA KISTNER 12/17/2019).

2. DURING CONSTRUCTION OF PAVEMENT SECTION, ENSURE NO PUNCTURING OF PVC SHEETING OCCURS.

DESIGN

INTERIM REVIEW
DOCUMENT INCOMPLETE. NOT INTENDED FOR PERMIT, BIDDING OR CONSTRUCTION.
ENGINEER: TYLER PAYNE DUBE
P.E. SERIAL NO: 118612
DATE: 1/9/2020

APPROVAL

INTERIM REVIEW
DOCUMENT INCOMPLETE. NOT INTENDED FOR PERMIT, BIDDING OR CONSTRUCTION.
ENGINEER: JOHN A. TYLER
P.E. SERIAL NO: 105193
DATE: 1/9/2020

REV. NO.	DATE	DESCRIPTION	BY

PAPE-DAWSON ENGINEERS
SAN ANTONIO | AUSTIN | HOUSTON | FORT WORTH | DALLAS
2000 NW LOOP 410 | SAN ANTONIO, TX 78213 | 210.375.9000
TBPE FIRM REGISTRATION #470 | TBPLS FIRM REGISTRATION #10028800

City of New Braunfels

KLEIN RD PHASE 2

PROPOSED TYPICAL SECTIONS

SHEET 1 OF 4

DGN:	STATE	PROJECT NO.	ROADWAY
CHK DGN:	TEXAS	NB 18-026	KLEIN RD
DWG:	COUNTY	CITY	SHEET NO.
CHK DWG:	GUADALUPE	NEW BRAUNFELS	24

Plotted on: 1/9/2020

Design Filename: H:\Projects\510\30\03\Design\Civil\General\5103003typ.dgn

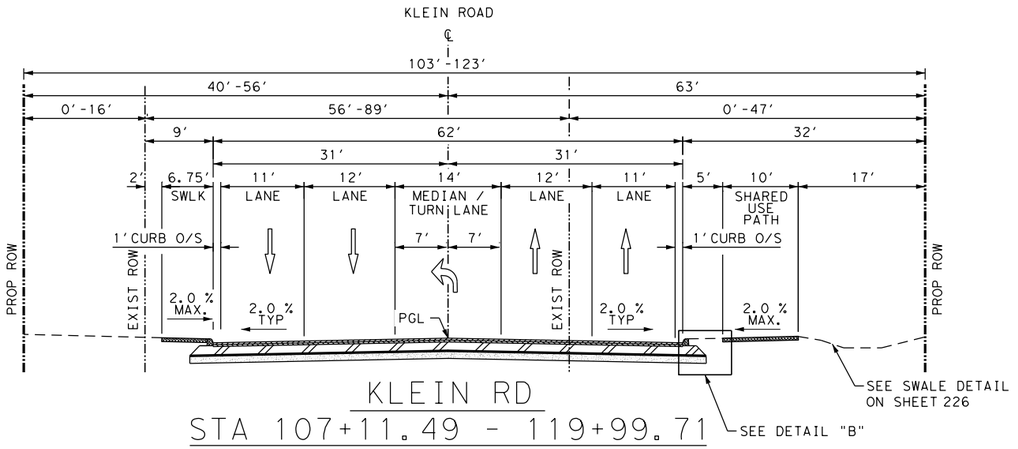

KLEIN RD

STA 107+11.49 - 119+99.71

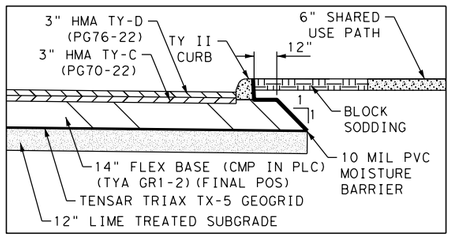

DETAIL "B"

NTS

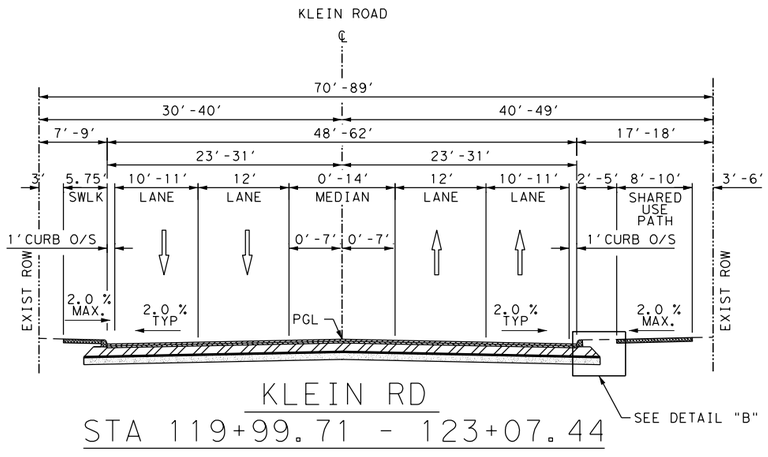

KLEIN RD

STA 119+99.71 - 123+07.44

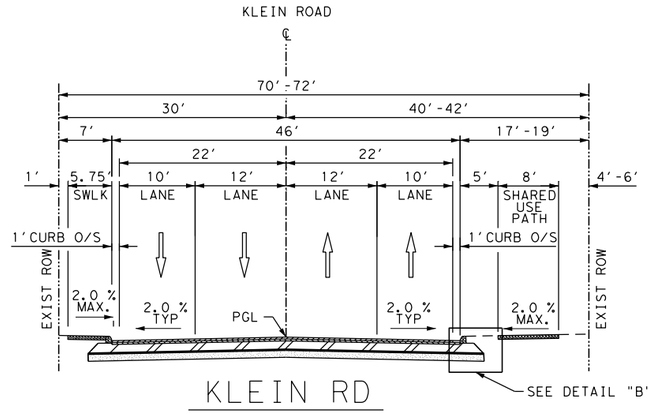

KLEIN RD

STA 123+07.44 - 134+60.00

NOTES:

1. PAVEMENT SECTION BASED ON RECOMMENDATIONS FROM GEOTECHNICAL ENGINEERING STUDY (PAVEMENTS FOR KLEIN ROAD RECONSTRUCTION PHASE II SOUTH WALNUT TO FM 725, PREPARED BY RABA KISTNER 12/17/2019).

2. DURING CONSTRUCTION OF PAVEMENT SECTION, ENSURE NO PUNCTURING OF PVC SHEETING OCCURS.

DESIGN

INTERIM REVIEW

DOCUMENT INCOMPLETE. NOT INTENDED FOR PERMIT, BIDDING OR CONSTRUCTION.
ENGINEER: TYLER PAYNE DUBE
P.E. SERIAL NO: 118612
DATE: 1/9/2020

APPROVAL

INTERIM REVIEW

DOCUMENT INCOMPLETE. NOT INTENDED FOR PERMIT, BIDDING OR CONSTRUCTION.
ENGINEER: JOHN A. TYLER
P.E. SERIAL NO: 105193
DATE: 1/9/2020

REV. NO.	DATE	DESCRIPTION	BY

PAPE-DAWSON ENGINEERS
SAN ANTONIO | AUSTIN | HOUSTON | FORT WORTH | DALLAS
2000 NW LOOP 410 | SAN ANTONIO, TX 78213 | 210.375.9000
TBPE FIRM REGISTRATION #470 | TBPLS FIRM REGISTRATION #10028800

City of New Braunfels

KLEIN RD PHASE 2

PROPOSED TYPICAL SECTIONS

SHEET 2 OF 4

DGN:	STATE	PROJECT NO.	ROADWAY
CHK DGN:	TEXAS	NB 18-026	KLEIN RD
DWG:	COUNTY	CITY	SHEET NO.
CHK DWG:	GUADALUPE	NEW BRAUNFELS	25

Plotted on: 1/9/2020

Design Filename: H:\Projects\510\30\03\Design\Civil\General\5103003typ.dgn

Plotted on: 1/9/2020

Design Filename: H:\Projects\510\30\03\Design\Civil\General\5103003typ.dgn

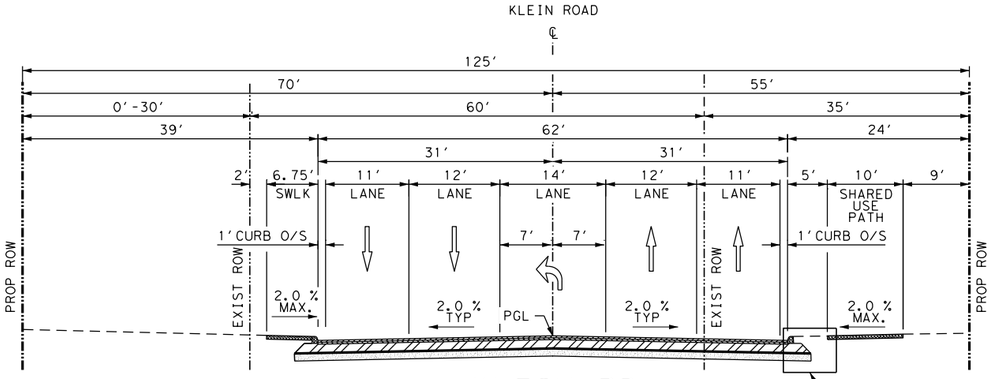

KLEIN RD

STA 137+05.00 - 140+62.08

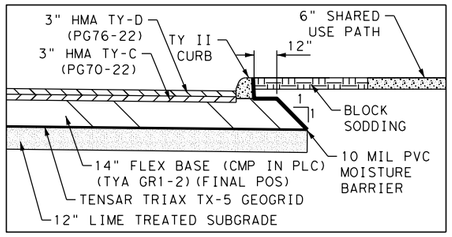

DETAIL "B"

NTS

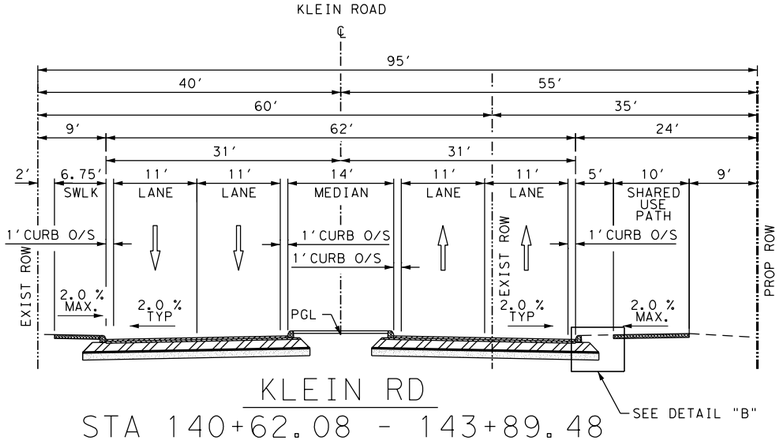

KLEIN RD

STA 140+62.08 - 143+89.48

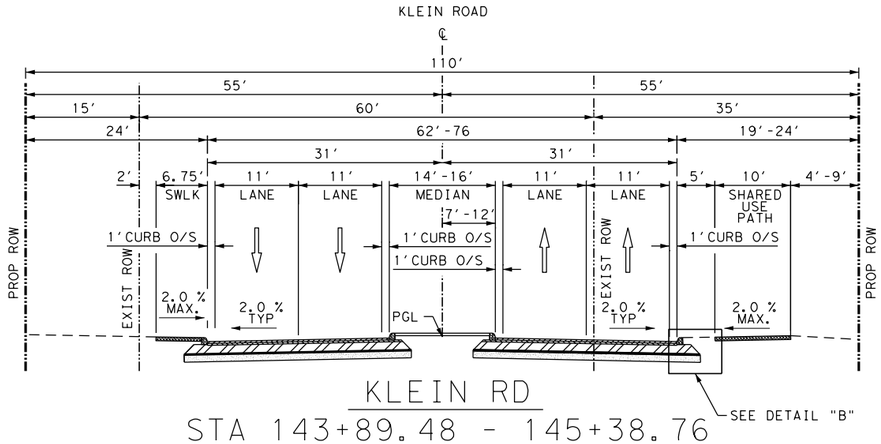

KLEIN RD

STA 143+89.48 - 145+38.76

NOTES:

1. PAVEMENT SECTION BASED ON RECOMMENDATIONS FROM GEOTECHNICAL ENGINEERING STUDY (PAVEMENTS FOR KLEIN ROAD RECONSTRUCTION PHASE II SOUTH WALNUT TO FM 725, PREPARED BY RABA KISTNER 12/17/2019).

2. DURING CONSTRUCTION OF PAVEMENT SECTION, ENSURE NO PUNCTURING OF PVC SHEETING OCCURS.

DESIGN

INTERIM REVIEW

DOCUMENT INCOMPLETE. NOT INTENDED FOR PERMIT, BIDDING OR CONSTRUCTION.
ENGINEER: TYLER PAYNE DUBE
P.E. SERIAL NO: 118612
DATE: 1/9/2020

APPROVAL

INTERIM REVIEW

DOCUMENT INCOMPLETE. NOT INTENDED FOR PERMIT, BIDDING OR CONSTRUCTION.
ENGINEER: JOHN A. TYLER
P.E. SERIAL NO: 105193
DATE: 1/9/2020

REV. NO.	DATE	DESCRIPTION	BY

PAPE-DAWSON ENGINEERS
SAN ANTONIO | AUSTIN | HOUSTON | FORT WORTH | DALLAS
2000 NW LOOP 410 | SAN ANTONIO, TX 78213 | 210.375.9000
TBPE FIRM REGISTRATION #470 | TBPLS FIRM REGISTRATION #10028800

City of New Braunfels

KLEIN RD PHASE 2

PROPOSED TYPICAL SECTIONS

SHEET 3 OF 4

DGN:	STATE	PROJECT NO.	ROADWAY
CHK DGN:	TEXAS	NB 18-026	KLEIN RD
DWG:	COUNTY	CITY	SHEET NO.
CHK DWG:	GUADALUPE	NEW BRAUNFELS	26

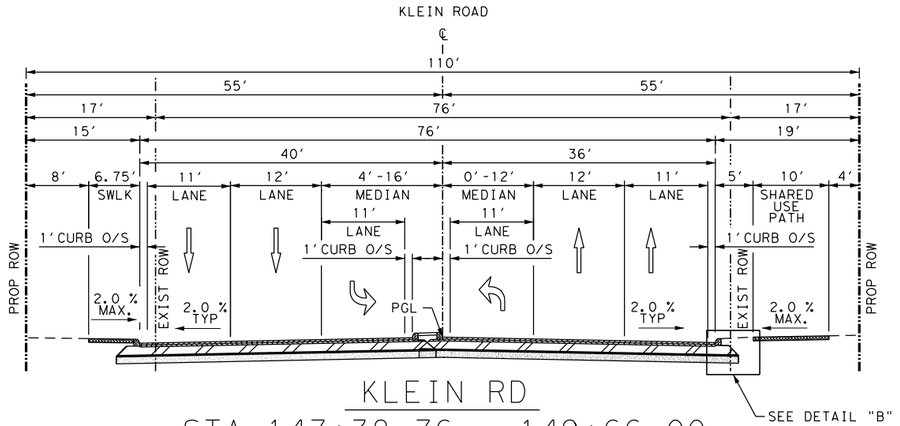

KLEIN RD

STA 147+38.76 - 149+66.00

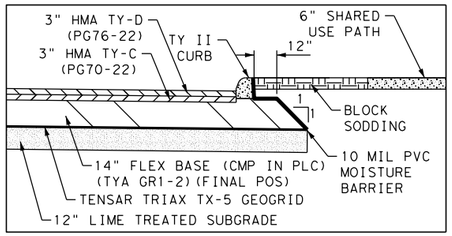

DETAIL "B"

NTS

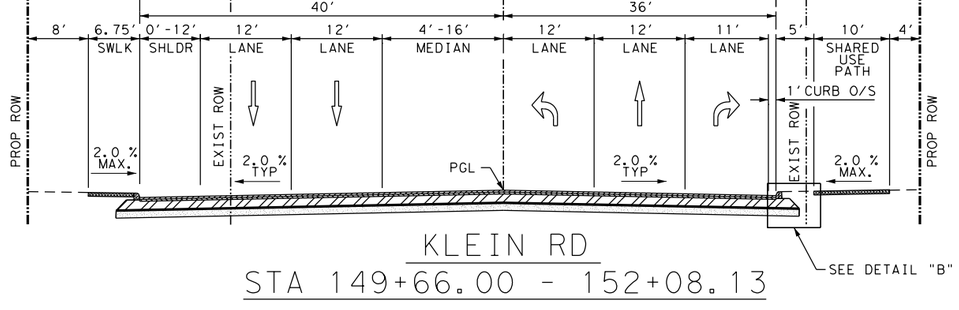

KLEIN RD

STA 149+66.00 - 152+08.13

NOTES:

1. PAVEMENT SECTION BASED ON RECOMMENDATIONS FROM GEOTECHNICAL ENGINEERING STUDY (PAVEMENTS FOR KLEIN ROAD RECONSTRUCTION PHASE II SOUTH WALNUT TO FM 725, PREPARED BY RABA KISTNER 12/17/2019).

2. DURING CONSTRUCTION OF PAVEMENT SECTION, ENSURE NO PUNCTURING OF PVC SHEETING OCCURS.

DESIGN

INTERIM REVIEW

DOCUMENT INCOMPLETE. NOT INTENDED FOR PERMIT, BIDDING OR CONSTRUCTION.
ENGINEER: TYLER PAYNE DUBE
P.E. SERIAL NO: 118612
DATE: 1/9/2020

APPROVAL

INTERIM REVIEW

DOCUMENT INCOMPLETE. NOT INTENDED FOR PERMIT, BIDDING OR CONSTRUCTION.
ENGINEER: JOHN A. TYLER
P.E. SERIAL NO: 105193
DATE: 1/9/2020

REV. NO.	DATE	DESCRIPTION	BY

PAPE-DAWSON ENGINEERS
SAN ANTONIO | AUSTIN | HOUSTON | FORT WORTH | DALLAS
2000 NW LOOP 410 | SAN ANTONIO, TX 78213 | 210.375.9000
TBPE FIRM REGISTRATION #470 | TBPLS FIRM REGISTRATION #10028800

City of New Braunfels

KLEIN RD PHASE 2

PROPOSED TYPICAL SECTIONS

SHEET 4 OF 4

DGN:	STATE	PROJECT NO.	ROADWAY
CHK DGN:	TEXAS	NB 18-026	KLEIN RD
DWG:	COUNTY	CITY	SHEET NO.
CHK DWG:	GUADALUPE	NEW BRAUNFELS	27

Plotted on: 1/9/2020

Design Filename: H:\Projects\510\30\03\Design\Civil\General\5103003typ.dgn

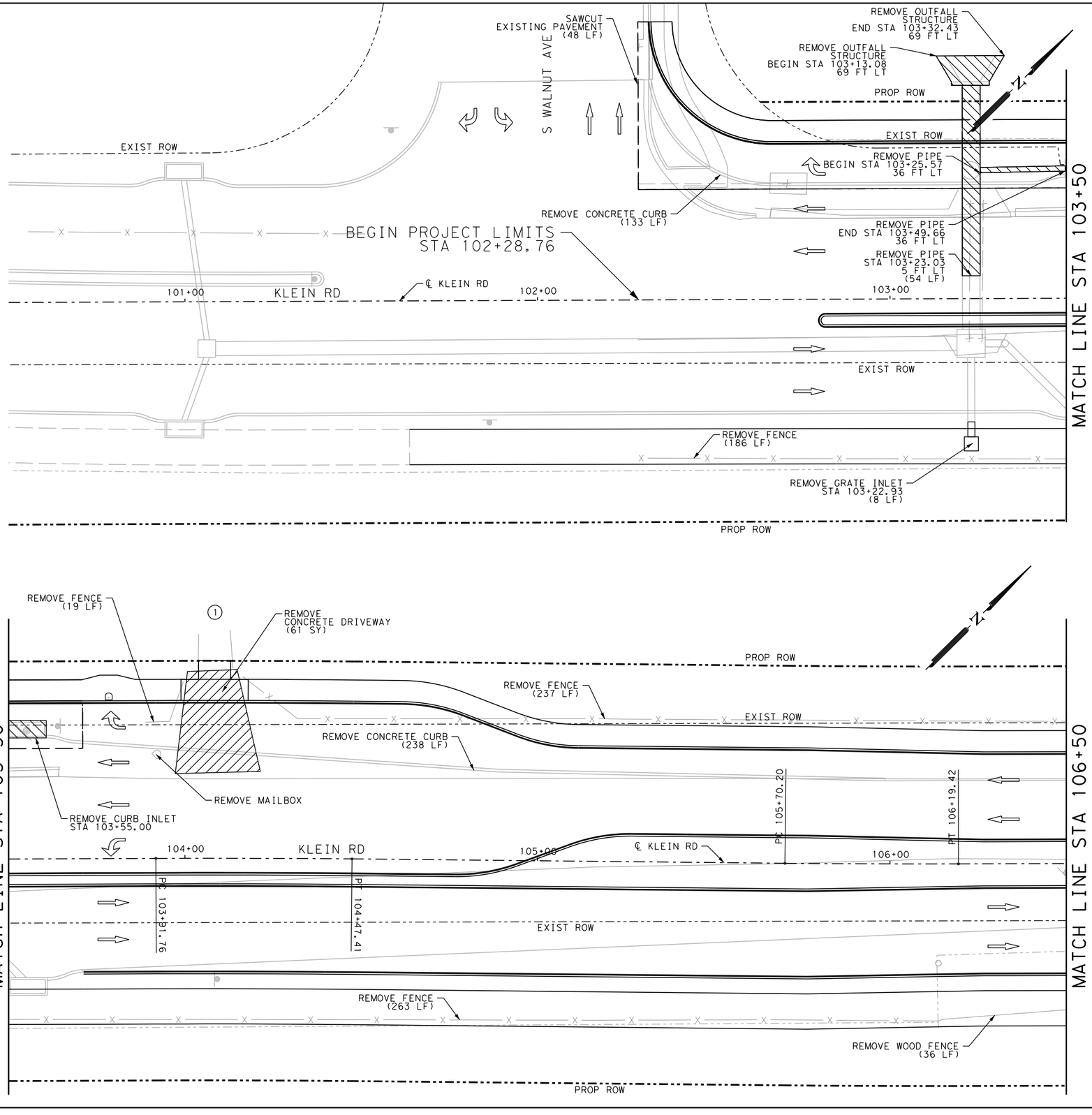

ITEM	DESCRIPTION	UNIT	QTY
0100-6002	PREPARING ROW	STA	4.2

DEMO LEGEND

- REMOVE DRIVEWAY
- REMOVE CONCRETE
- REMOVE SIDEWALK
- REMOVE STRUCTURE

LEGEND

- FENCE
- WOOD FENCE
- SIGN
- MAILBOX
- STONE COLUMN
- TREE
- SHRUB

NOTES

1. EXISTING FEATURES INDICATED FOR REMOVAL ARE PAID UNDER ITEM 0100 PREPARING ROW.

DESIGN

INTERIM REVIEW

DOCUMENT INCOMPLETE. NOT INTENDED FOR PERMIT, BIDDING OR CONSTRUCTION.
ENGINEER: TYLER PAYNE DUBE
P.E. SERIAL NO: 118612
DATE: 1/9/2020

APPROVAL

INTERIM REVIEW

DOCUMENT INCOMPLETE. NOT INTENDED FOR PERMIT, BIDDING OR CONSTRUCTION.
ENGINEER: JOHN A. TYLER
P.E. SERIAL NO: 105193
DATE: 1/9/2020

0 10 20 30 60

SCALE: PLAN 1"= 30'

REV. NO.	DATE	DESCRIPTION	BY

PAPE-DAWSON ENGINEERS
SAN ANTONIO | AUSTIN | HOUSTON | FORT WORTH | DALLAS
2000 NW LOOP 410 | SAN ANTONIO, TX 78213 | 210.375.9000
TBPE FIRM REGISTRATION #470 | TBPLS FIRM REGISTRATION #10028800

City of New Braunfels

KLEIN RD PHASE 2

DEMO PLAN

BEGIN PROJECT TO STA 106+50

SHEET 1 OF 9

DGN:	STATE	PROJECT NO.	ROADWAY
CHK DGN:	TEXAS	NB 18-026	KLEIN RD
DWG:	COUNTY	CITY	SHEET NO.
CHK DWG:	GUADALUPE	NEW BRAUNFELS	28

Plotted on: 1/9/2020

Design Filename: H:\Projects\510\30\03\Design\Civil\Roadway\Demo\5103003dem01.dgn

ITEM	DESCRIPTION	UNIT	QTY
0100-6002	PREPARING ROW	STA	6.0

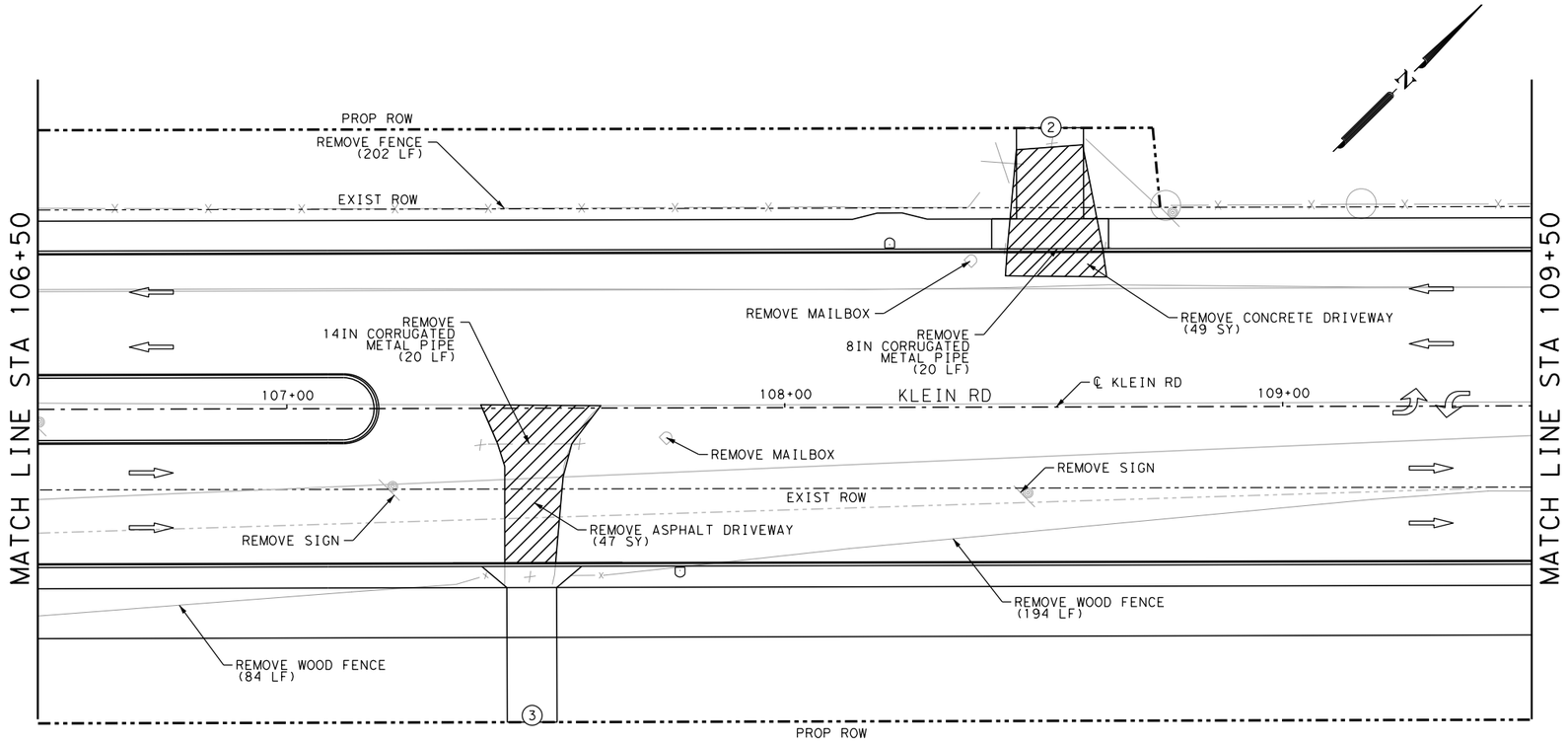

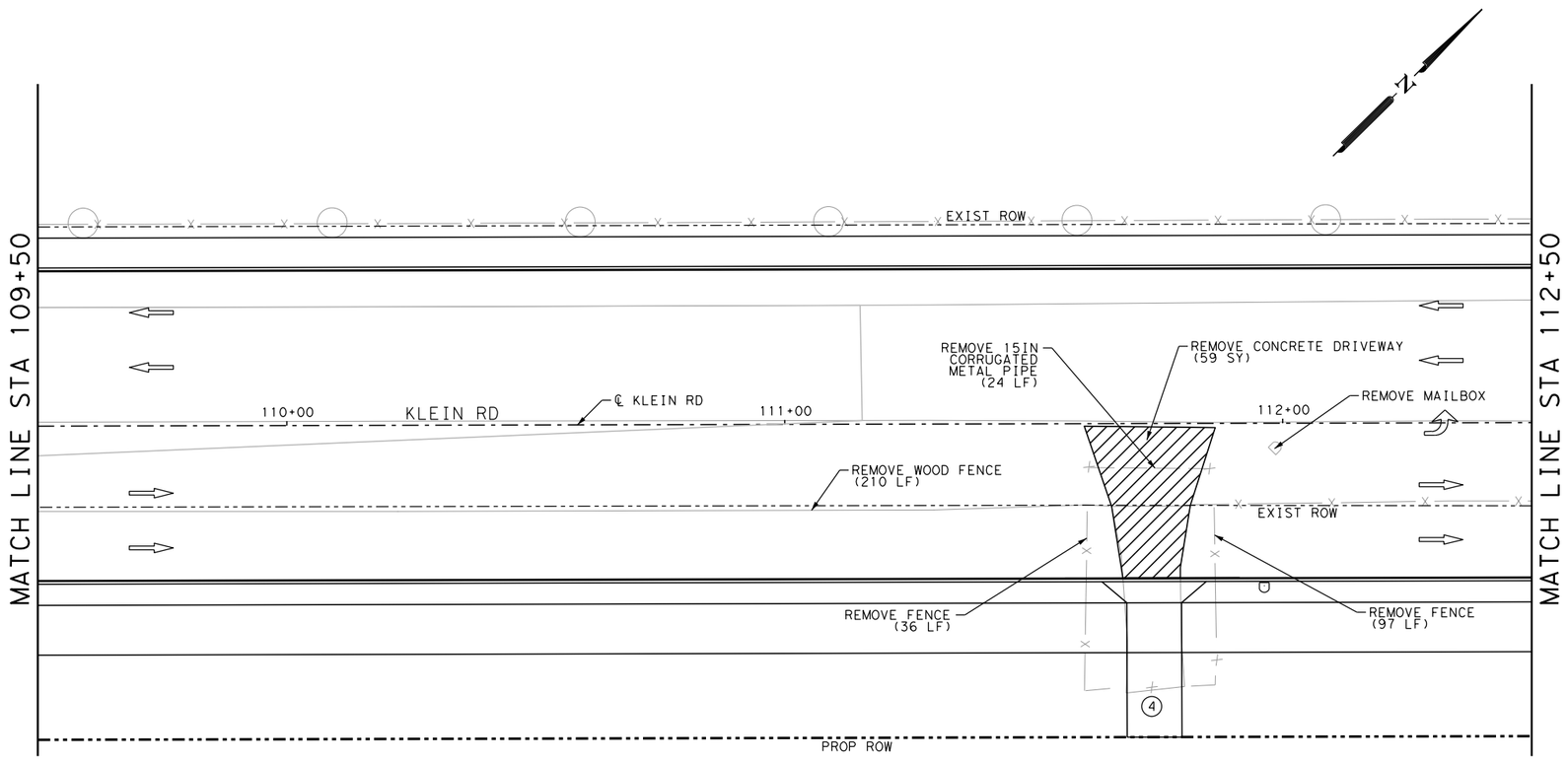

DEMO LEGEND

- REMOVE DRIVEWAY
- REMOVE CONCRETE
- REMOVE SIDEWALK
- REMOVE STRUCTURE

LEGEND

- FENCE
- WOOD FENCE
- SIGN
- MAILBOX
- STONE COLUMN
- TREE
- SHRUB

NOTES

1. EXISTING FEATURES INDICATED FOR REMOVAL ARE PAID UNDER ITEM 0100 PREPARING ROW.

DESIGN

INTERIM REVIEW
DOCUMENT INCOMPLETE. NOT INTENDED FOR PERMIT, BIDDING OR CONSTRUCTION.
ENGINEER: TYLER PAYNE DUBE
P.E. SERIAL NO: 118612
DATE: 1/9/2020

APPROVAL

INTERIM REVIEW
DOCUMENT INCOMPLETE. NOT INTENDED FOR PERMIT, BIDDING OR CONSTRUCTION.
ENGINEER: JOHN A. TYLER
P.E. SERIAL NO: 105193
DATE: 1/9/2020

0 10 20 30 60

SCALE: PLAN 1"= 30'

REV. NO.	DATE	DESCRIPTION	BY

PAPE-DAWSON ENGINEERS
SAN ANTONIO | AUSTIN | HOUSTON | FORT WORTH | DALLAS
2000 NW LOOP 410 | SAN ANTONIO, TX 78213 | 210.375.9000
TBPE FIRM REGISTRATION #470 | TBPLS FIRM REGISTRATION #10028800

City of New Braunfels

KLEIN RD PHASE 2

DEMO PLAN

STA 106+50 TO STA 112+50

SHEET 2 OF 9

DGN:	STATE	PROJECT NO.	ROADWAY
CHK DGN:	TEXAS	NB 18-026	KLEIN RD
DWG:	COUNTY	CITY	SHEET NO.
CHK DWG:	GUADALUPE	NEW BRAUNFELS	29

Plotted on: 1/9/2020

Design Filename: H:\Projects\510\30\03\Design\Civil\Roadway\Demo\5103003dem02.dgn

Plotted on: 1/9/2020

Design Filename: H:\Projects\510\30\03\Design\Civil\Roadway\Demo\5103003dem03.dgn

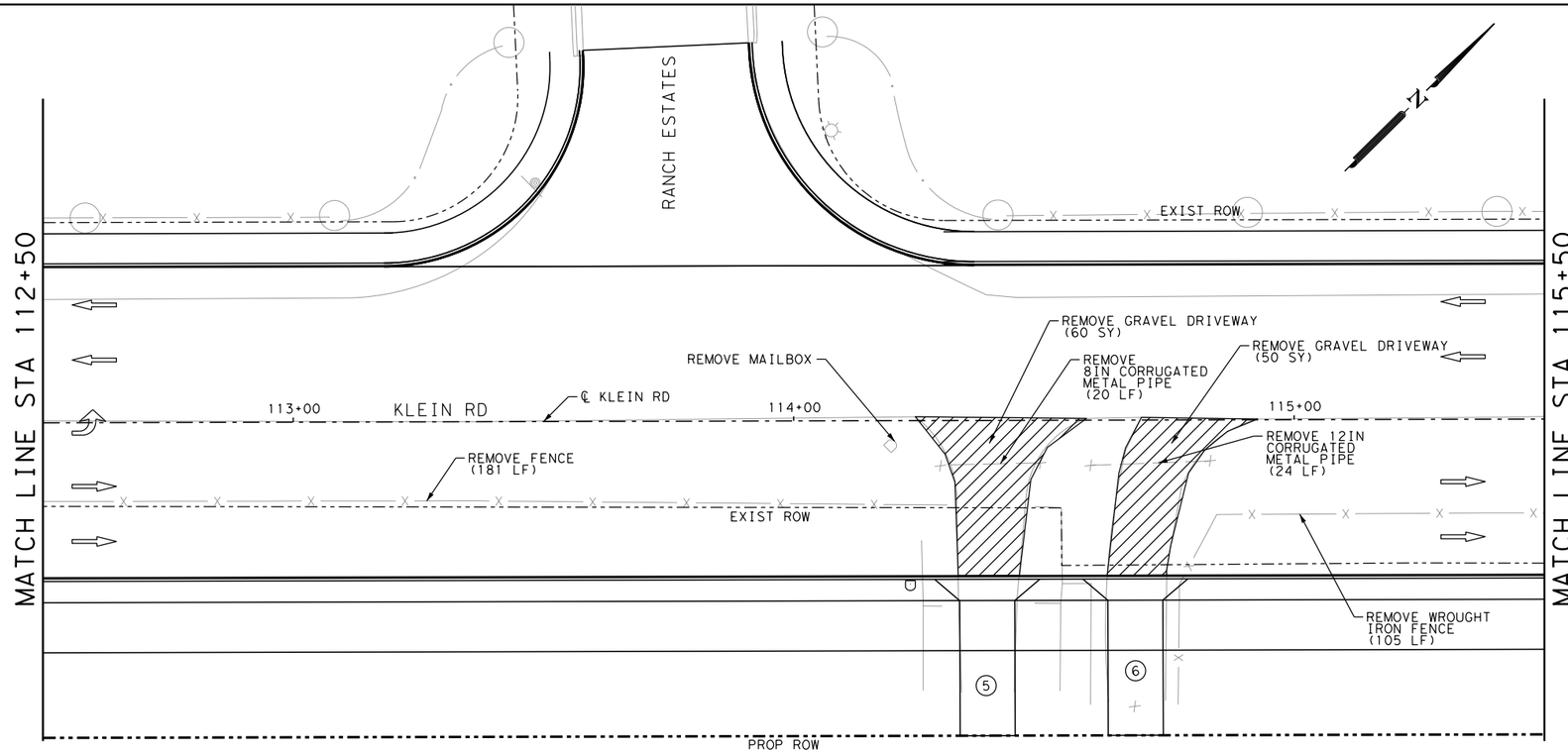

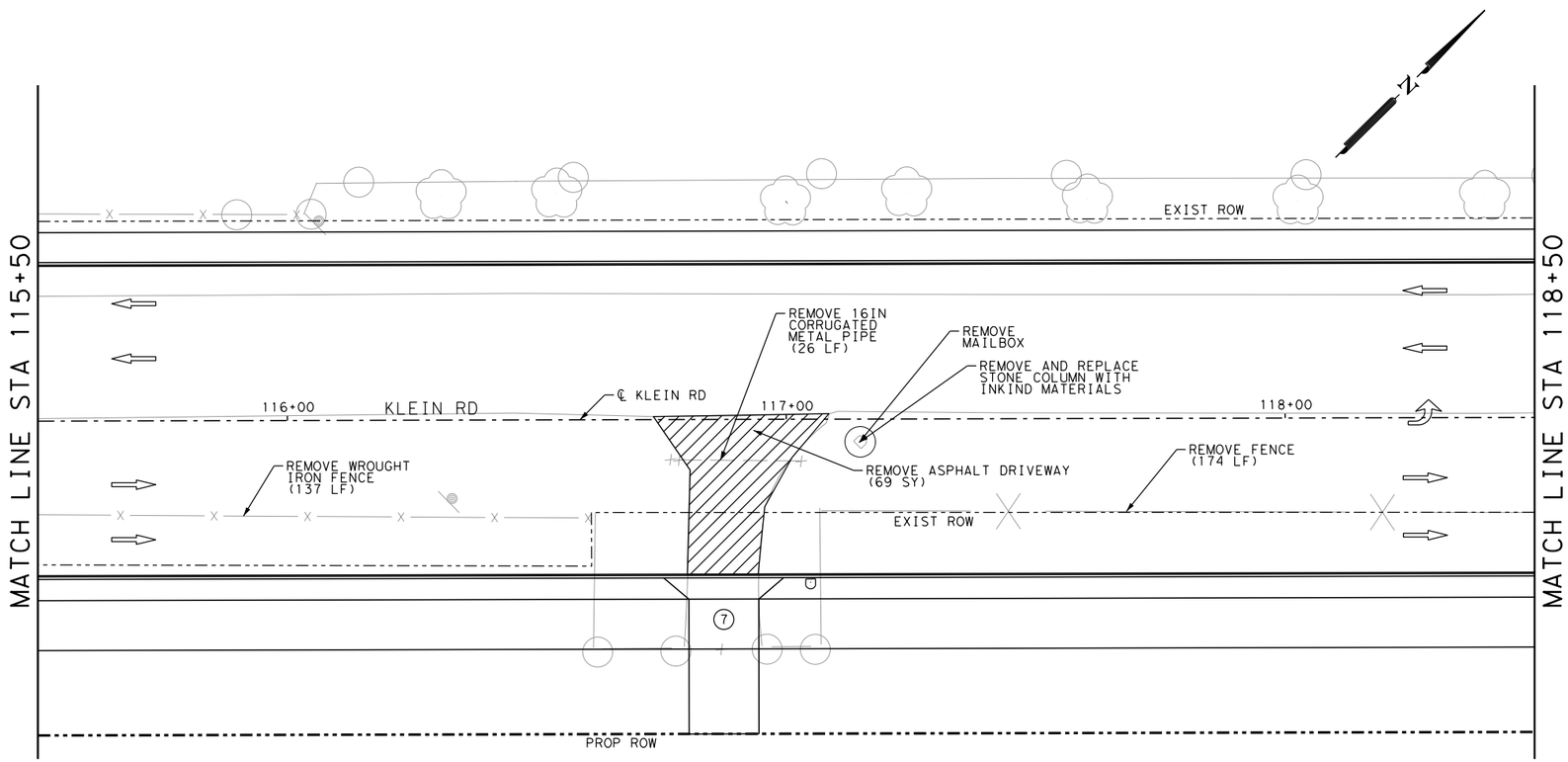

ITEM	DESCRIPTION	UNIT	QTY
0100-6002	PREPARING ROW	STA	6.0

DEMO LEGEND

- REMOVE DRIVEWAY
- REMOVE CONCRETE
- REMOVE SIDEWALK
- REMOVE STRUCTURE

LEGEND

- FENCE
- WOOD FENCE
- SIGN
- MAILBOX
- STONE COLUMN
- TREE
- SHRUB

NOTES

1. EXISTING FEATURES INDICATED FOR REMOVAL ARE PAID UNDER ITEM 0100 PREPARING ROW.

DESIGN

INTERIM REVIEW

DOCUMENT INCOMPLETE. NOT INTENDED FOR PERMIT, BIDDING OR CONSTRUCTION.
ENGINEER: TYLER PAYNE DUBE
P.E. SERIAL NO: 118612
DATE: 1/9/2020

APPROVAL

INTERIM REVIEW

DOCUMENT INCOMPLETE. NOT INTENDED FOR PERMIT, BIDDING OR CONSTRUCTION.
ENGINEER: JOHN A. TYLER
P.E. SERIAL NO: 105193
DATE: 1/9/2020

0 10 20 30 60

SCALE: PLAN 1" = 30'

REV. NO.	DATE	DESCRIPTION	BY

PAPE-DAWSON ENGINEERS
SAN ANTONIO | AUSTIN | HOUSTON | FORT WORTH | DALLAS
2000 NW LOOP 410 | SAN ANTONIO, TX 78213 | 210.375.9000
TBPE FIRM REGISTRATION #470 | TBPLS FIRM REGISTRATION #10028800

City of New Braunfels

KLEIN RD PHASE 2

DEMO PLAN

STA 112+50 TO STA 118+50

SHEET 3 OF 9

DGN:	STATE	PROJECT NO.	ROADWAY
CHK DGN:	TEXAS	NB 18-026	KLEIN RD
DWG:	COUNTY	CITY	SHEET NO.
CHK DWG:	GUADALUPE	NEW BRAUNFELS	30

Plotted on: 1/9/2020
Design Filename: H:\Projects\510\30\03\Design\Civil\Roadway\Demo\5103003dem04.dgn

ITEM	DESCRIPTION	UNIT	QTY
0100-6002	PREPARING ROW	STA	6.0

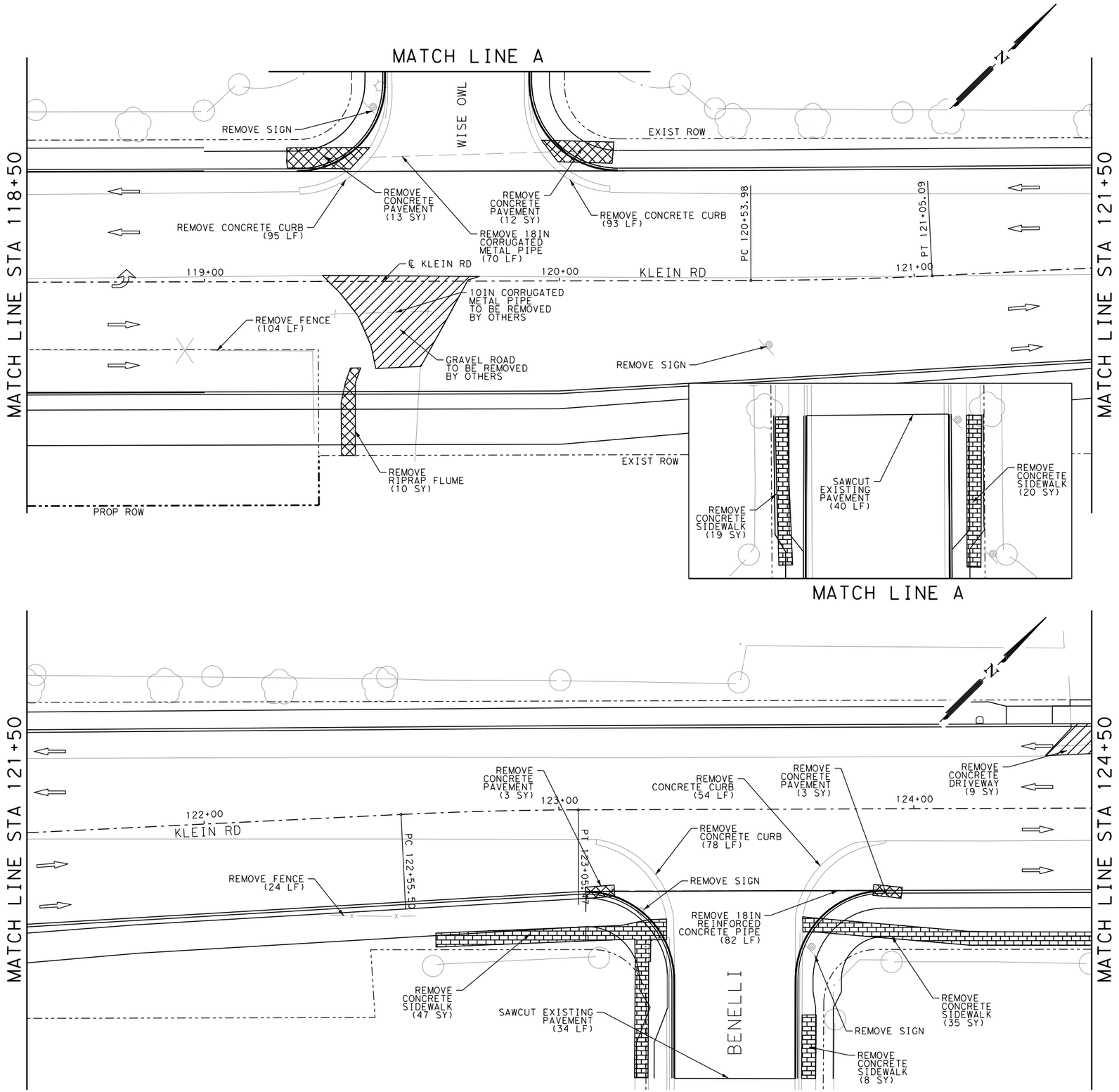

DEMO LEGEND

- REMOVE DRIVEWAY
- REMOVE CONCRETE
- REMOVE SIDEWALK
- REMOVE STRUCTURE

LEGEND

- FENCE
- WOOD FENCE
- SIGN
- MAILBOX
- STONE COLUMN
- TREE
- SHRUB

NOTES

1. EXISTING FEATURES INDICATED FOR REMOVAL ARE PAID UNDER ITEM 0100 PREPARING ROW.

DESIGN

INTERIM REVIEW
DOCUMENT INCOMPLETE. NOT INTENDED FOR PERMIT, BIDDING OR CONSTRUCTION.
ENGINEER: TYLER PAYNE DUBE
P.E. SERIAL NO: 118612
DATE: 1/9/2020

APPROVAL

INTERIM REVIEW
DOCUMENT INCOMPLETE. NOT INTENDED FOR PERMIT, BIDDING OR CONSTRUCTION.
ENGINEER: JOHN A. TYLER
P.E. SERIAL NO: 105193
DATE: 1/9/2020

0 10 20 30 60

SCALE: PLAN 1" = 30'

REV. NO.	DATE	DESCRIPTION	BY

PAPE-DAWSON ENGINEERS
SAN ANTONIO | AUSTIN | HOUSTON | FORT WORTH | DALLAS
2000 NW LOOP 410 | SAN ANTONIO, TX 78213 | 210.375.9000
TBPE FIRM REGISTRATION #470 | TBPLS FIRM REGISTRATION #10028800

City of New Braunfels

KLEIN RD PHASE 2

DEMO PLAN

STA 118+50 TO STA 124+50

SHEET 4 OF 9

DGN:	STATE	PROJECT NO.	ROADWAY
CHK DGN:	TEXAS	NB 18-026	KLEIN RD
DWG:	COUNTY	CITY	SHEET NO.
CHK DWG:	GUADALUPE	NEW BRAUNFELS	31

Plotted on: 1/9/2020

Design Filename: H:\Projects\510\30\03\Design\Civil\Roadway\Demo\5103003dem05.dgn

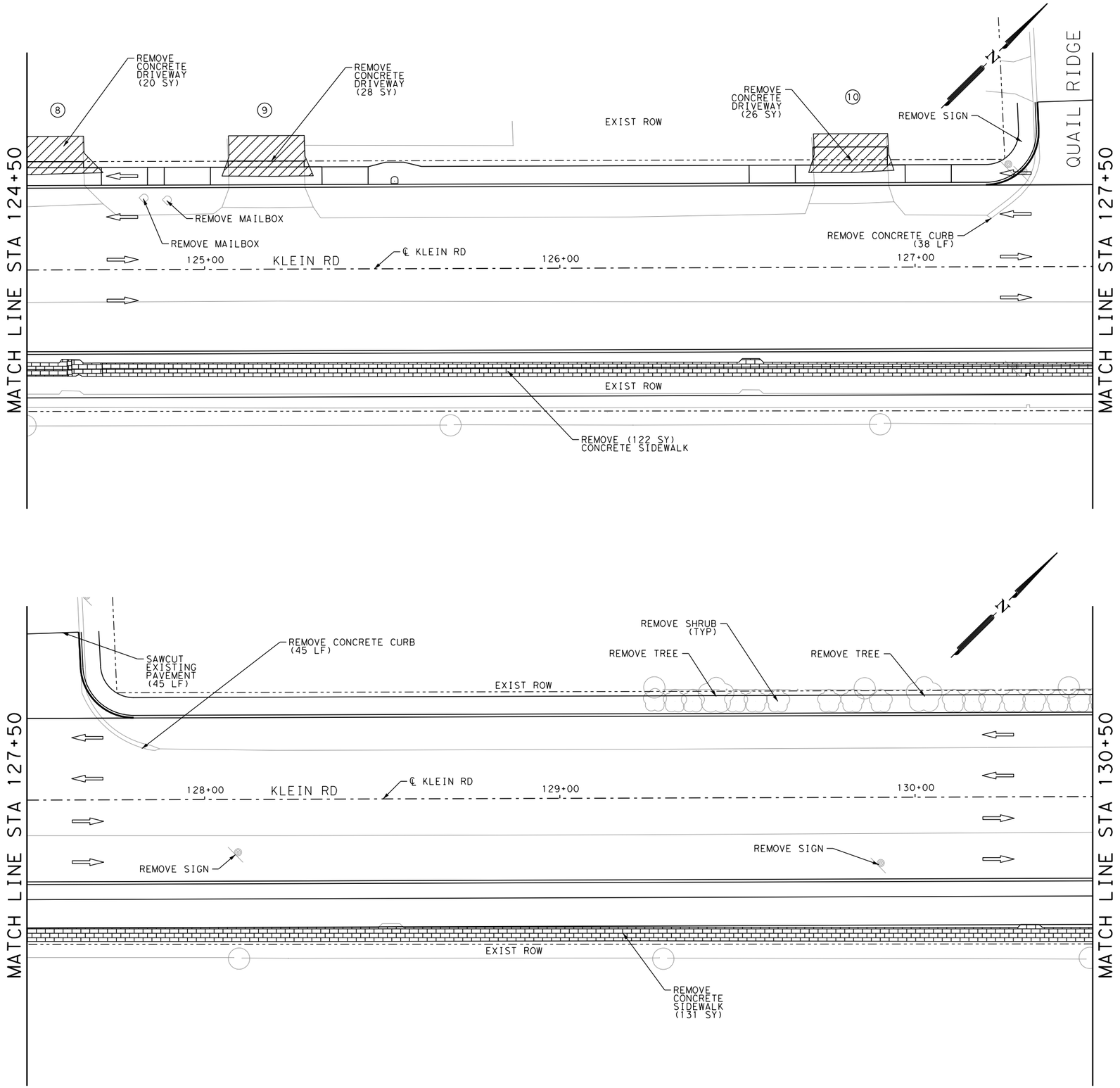

ITEM	DESCRIPTION	UNIT	QTY
0100-6002	PREPARING ROW	STA	6.0

DEMO LEGEND

- REMOVE DRIVEWAY
- REMOVE CONCRETE
- REMOVE SIDEWALK
- REMOVE STRUCTURE

LEGEND

- FENCE
- WOOD FENCE
- SIGN
- MAILBOX
- STONE COLUMN
- TREE
- SHRUB

NOTES

1. EXISTING FEATURES INDICATED FOR REMOVAL ARE PAID UNDER ITEM 0100 PREPARING ROW.

DESIGN

INTERIM REVIEW

DOCUMENT INCOMPLETE. NOT INTENDED FOR PERMIT, BIDDING OR CONSTRUCTION.
ENGINEER: TYLER PAYNE DUBE
P.E. SERIAL NO: 118612
DATE: 1/9/2020

APPROVAL

INTERIM REVIEW

DOCUMENT INCOMPLETE. NOT INTENDED FOR PERMIT, BIDDING OR CONSTRUCTION.
ENGINEER: JOHN A. TYLER
P.E. SERIAL NO: 105193
DATE: 1/9/2020

0 10 20 30 60

SCALE: PLAN 1"= 30'

REV. NO.	DATE	DESCRIPTION	BY

PAPE-DAWSON ENGINEERS
SAN ANTONIO | AUSTIN | HOUSTON | FORT WORTH | DALLAS
2000 NW LOOP 410 | SAN ANTONIO, TX 78213 | 210.375.9000
TBPE FIRM REGISTRATION #470 | TBPLS FIRM REGISTRATION #10028800

City of New Braunfels

KLEIN RD PHASE 2

DEMO PLAN

STA 124+50 TO STA 130+50

SHEET 5 OF 9

DGN:	STATE	PROJECT NO.	ROADWAY
CHK DGN:	TEXAS	NB 18-026	KLEIN RD
DWG:	COUNTY	CITY	SHEET NO.
CHK DWG:	GUADALUPE	NEW BRAUNFELS	32

ITEM	DESCRIPTION	UNIT	QTY
0100-6002	PREPARING ROW	STA	6.0

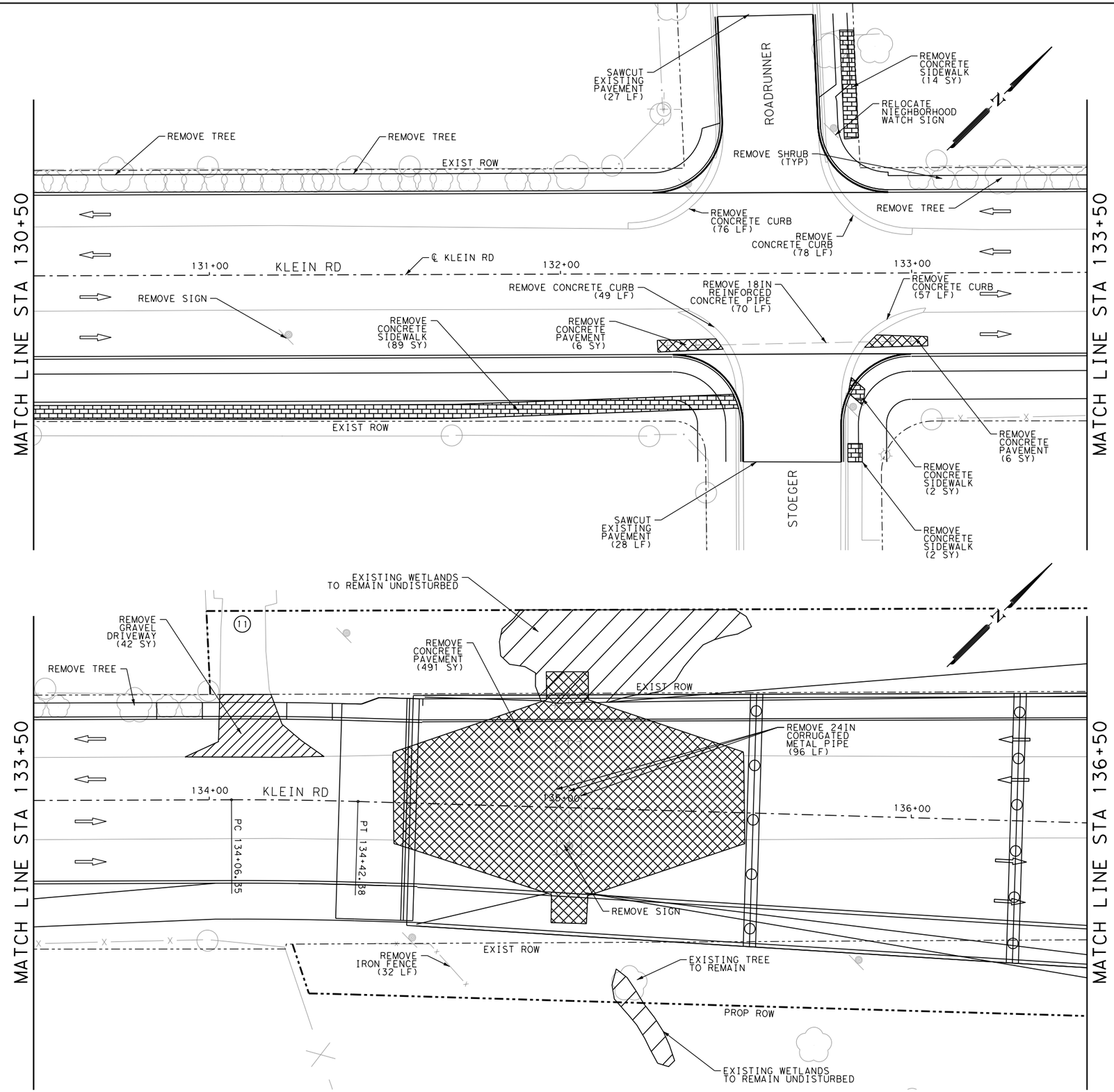

DEMO LEGEND

- REMOVE DRIVEWAY
- REMOVE CONCRETE
- REMOVE SIDEWALK
- REMOVE STRUCTURE

LEGEND

- FENCE
- WOOD FENCE
- SIGN
- MAILBOX
- STONE COLUMN
- TREE
- SHRUB

NOTES

1. EXISTING FEATURES INDICATED FOR REMOVAL ARE PAID UNDER ITEM 0100 PREPARING ROW.

DESIGN

INTERIM REVIEW
DOCUMENT INCOMPLETE. NOT INTENDED FOR PERMIT, BIDDING OR CONSTRUCTION.
ENGINEER: TYLER PAYNE DUBE
P.E. SERIAL NO: 118612
DATE: 1/9/2020

APPROVAL

INTERIM REVIEW
DOCUMENT INCOMPLETE. NOT INTENDED FOR PERMIT, BIDDING OR CONSTRUCTION.
ENGINEER: JOHN A. TYLER
P.E. SERIAL NO: 105193
DATE: 1/9/2020

0 10 20 30 60

SCALE: PLAN 1"= 30'

REV. NO.	DATE	DESCRIPTION	BY

PAPE-DAWSON ENGINEERS
SAN ANTONIO | AUSTIN | HOUSTON | FORT WORTH | DALLAS
2000 NW LOOP 410 | SAN ANTONIO, TX 78213 | 210.375.9000
TBPE FIRM REGISTRATION #470 | TBPLS FIRM REGISTRATION #10028800

City of New Braunfels

KLEIN RD PHASE 2

DEMO PLAN

STA 130+50 TO STA 136+50

SHEET 6 OF 9

DGN:	STATE	PROJECT NO.	ROADWAY
CHK DGN:	TEXAS	NB 18-026	KLEIN RD
DWG:	COUNTY	CITY	SHEET NO.
CHK DWG:	GUADALUPE	NEW BRAUNFELS	33

Plotted on: 1/9/2020

Design Filename: H:\Projects\510\30\03\Design\Civil\Roadway\Demo\5103003dem06.dgn

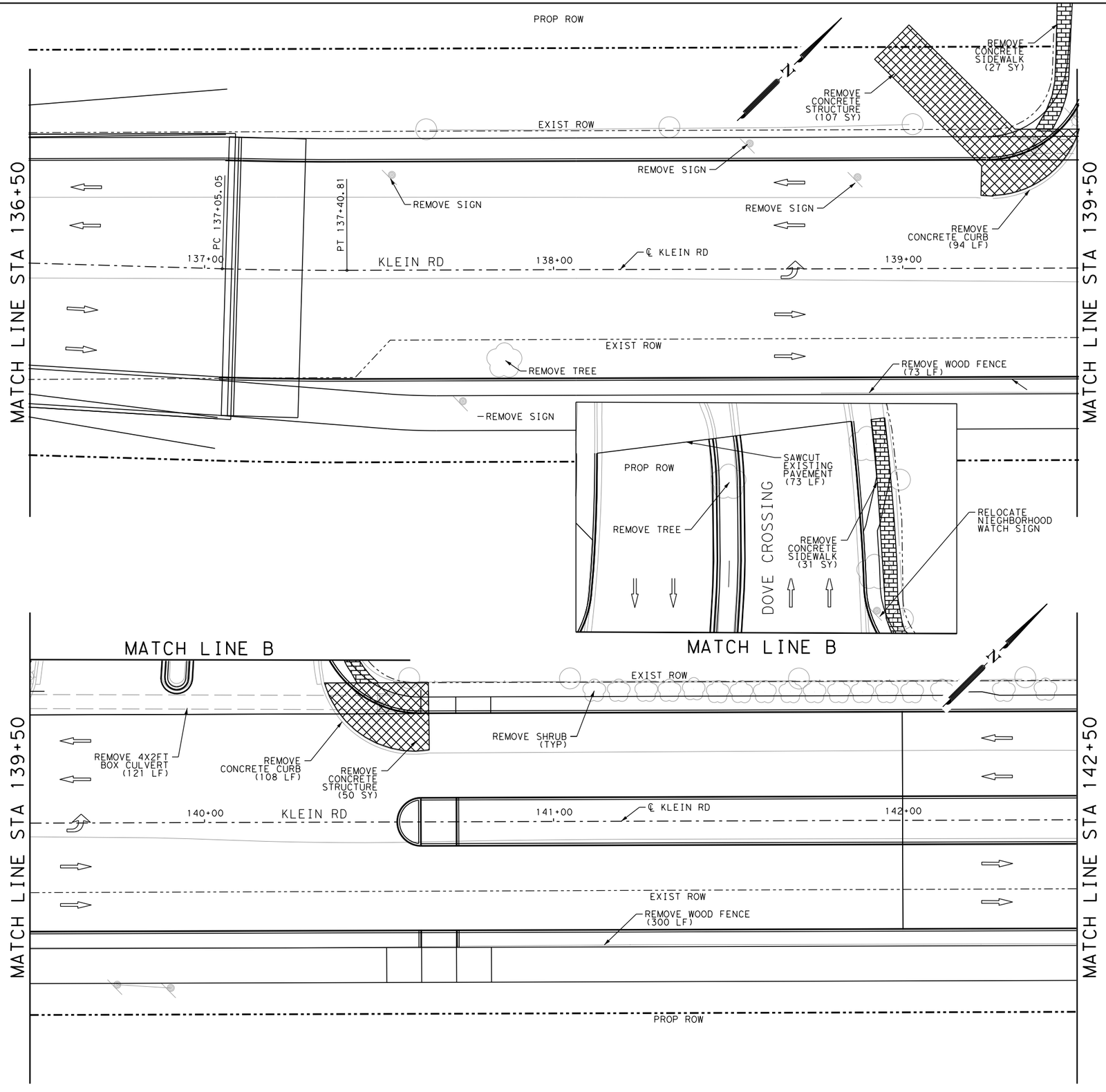

ITEM	DESCRIPTION	UNIT	QTY
0100-6002	PREPARING ROW	STA	6.0

DEMO LEGEND

- REMOVE DRIVEWAY
- REMOVE CONCRETE
- REMOVE SIDEWALK
- REMOVE STRUCTURE

LEGEND

- FENCE
- WOOD FENCE
- SIGN
- MAILBOX
- STONE COLUMN
- TREE
- SHRUB

NOTES

1. EXISTING FEATURES INDICATED FOR REMOVAL ARE PAID UNDER ITEM 0100 PREPARING ROW.

DESIGN

INTERIM REVIEW

DOCUMENT INCOMPLETE. NOT INTENDED FOR PERMIT, BIDDING OR CONSTRUCTION.
ENGINEER: TYLER PAYNE DUBE
P.E. SERIAL NO: 118612
DATE: 1/9/2020

APPROVAL

INTERIM REVIEW

DOCUMENT INCOMPLETE. NOT INTENDED FOR PERMIT, BIDDING OR CONSTRUCTION.
ENGINEER: JOHN A. TYLER
P.E. SERIAL NO: 105193
DATE: 1/9/2020

0 10 20 30 60

SCALE: PLAN 1" = 30'

REV. NO.	DATE	DESCRIPTION	BY

PAPE-DAWSON ENGINEERS
SAN ANTONIO | AUSTIN | HOUSTON | FORT WORTH | DALLAS
2000 NW LOOP 410 | SAN ANTONIO, TX 78213 | 210.375.9000
TBPE FIRM REGISTRATION #470 | TBPLS FIRM REGISTRATION #10028800

City of New Braunfels

KLEIN RD PHASE 2

DEMO PLAN

STA 136+50 TO STA 142+50

SHEET 7 OF 9

DGN:	STATE	PROJECT NO.	ROADWAY
CHK DGN:	TEXAS	NB 18-026	KLEIN RD
DWG:	COUNTY	CITY	SHEET NO.
CHK DWG:	GUADALUPE	NEW BRAUNFELS	34

Plotted on: 1/9/2020

Design Filename: H:\Projects\510\30\03\Design\Civil\Roadway\Demo\5103003dem07.dgn

Plotted on: 1/9/2020

Design Filename: H:\Projects\510\30\03\Design\Civil\Roadway\Demo\5103003dem08.dgn

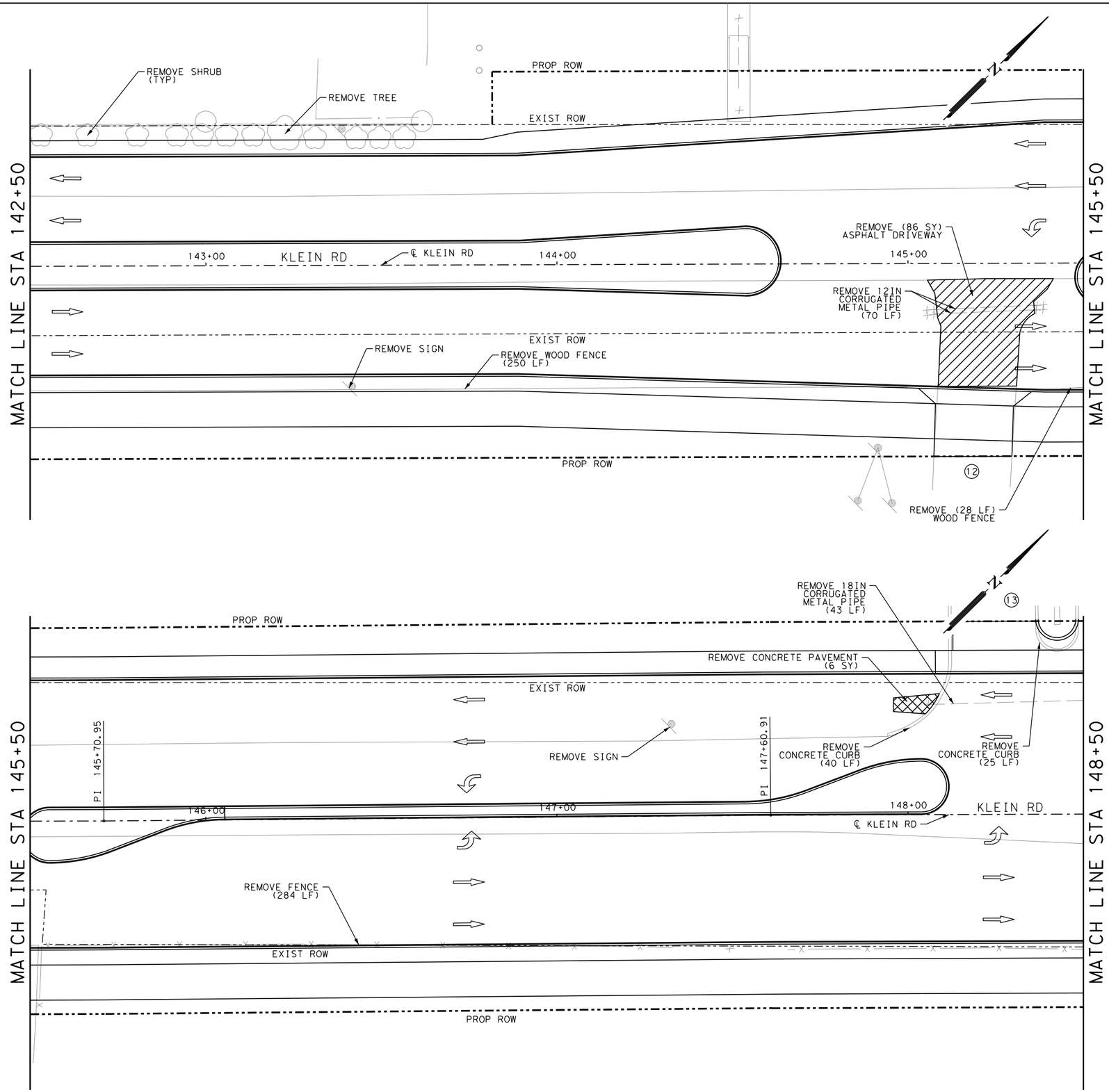

ITEM	DESCRIPTION	UNIT	QTY
0100-6002	PREPARING ROW	STA	6.0

DEMO LEGEND

- REMOVE DRIVEWAY
- REMOVE CONCRETE
- REMOVE SIDEWALK
- REMOVE STRUCTURE

LEGEND

- FENCE
- WOOD FENCE
- SIGN
- MAILBOX
- STONE COLUMN
- TREE
- SHRUB

NOTES

1. EXISTING FEATURES INDICATED FOR REMOVAL ARE PAID UNDER ITEM 0100 PREPARING ROW.

DESIGN

INTERIM REVIEW

DOCUMENT INCOMPLETE. NOT INTENDED FOR PERMIT, BIDDING OR CONSTRUCTION.
ENGINEER: TYLER PAYNE DUBE
P.E. SERIAL NO: 118612
DATE: 1/9/2020

APPROVAL

INTERIM REVIEW

DOCUMENT INCOMPLETE. NOT INTENDED FOR PERMIT, BIDDING OR CONSTRUCTION.
ENGINEER: JOHN A. TYLER
P.E. SERIAL NO: 105193
DATE: 1/9/2020

0 10 20 30 60

SCALE: PLAN 1"= 30'

REV. NO.	DATE	DESCRIPTION	BY

PAPE-DAWSON ENGINEERS
SAN ANTONIO | AUSTIN | HOUSTON | FORT WORTH | DALLAS
2000 NW LOOP 410 | SAN ANTONIO, TX 78213 | 210.375.9000
TBPE FIRM REGISTRATION #470 | TBPLS FIRM REGISTRATION #10028800

City of New Braunfels

KLEIN RD PHASE 2

DEMO PLAN

STA 142+50 TO STA 148+50

SHEET 8 OF 9

DGN:	STATE	PROJECT NO.	ROADWAY
CHK DGN:	TEXAS	NB 18-026	KLEIN RD
DWG:	COUNTY	CITY	SHEET NO.
CHK DWG:	GUADALUPE	NEW BRAUNFELS	35

ITEM	DESCRIPTION	UNIT	QTY
0100-6002	PREPARING ROW	STA	4.4

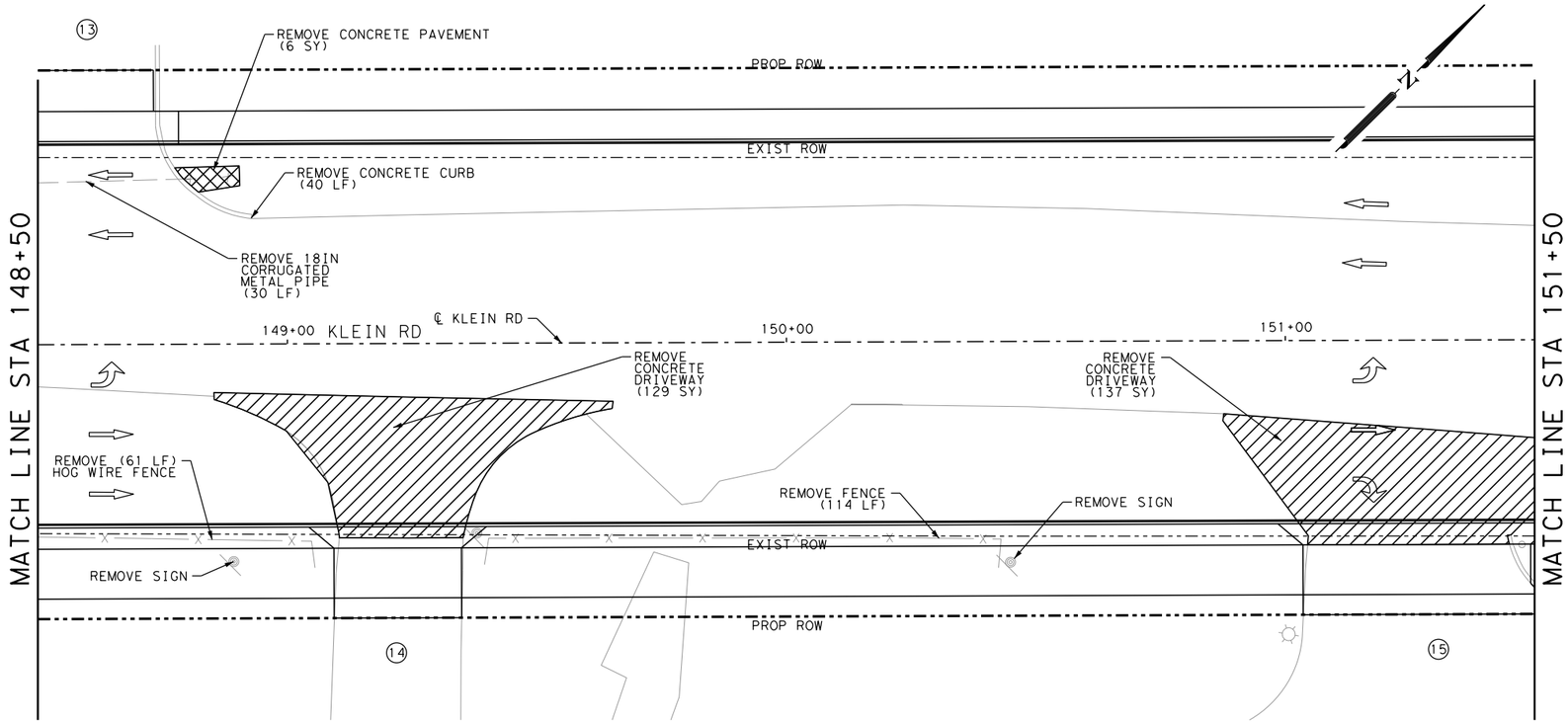

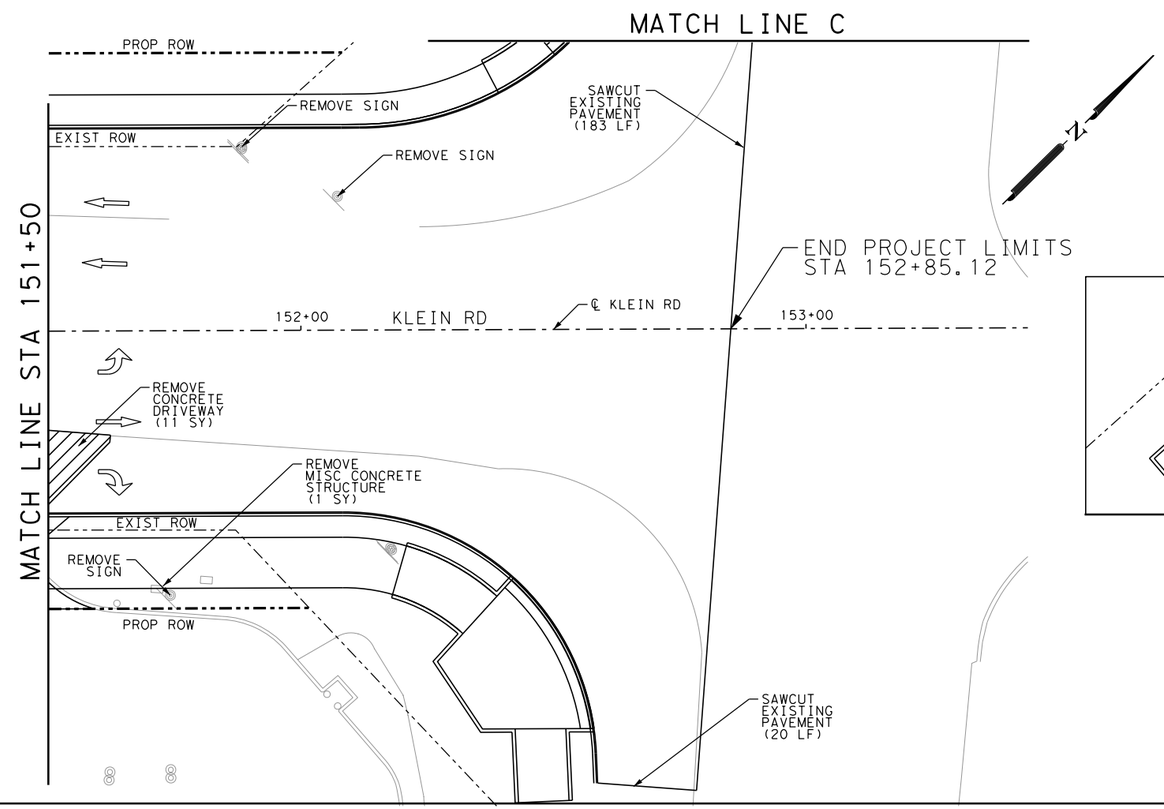

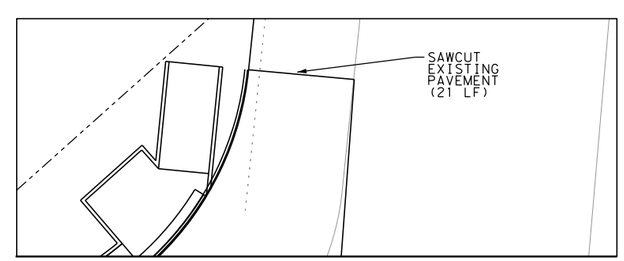

MATCH LINE C

DEMO LEGEND

- REMOVE DRIVEWAY
- REMOVE CONCRETE
- REMOVE SIDEWALK
- REMOVE STRUCTURE

LEGEND

- FENCE
- WOOD FENCE
- SIGN
- MAILBOX
- STONE COLUMN
- TREE
- SHRUB

NOTES

1. EXISTING FEATURES INDICATED FOR REMOVAL ARE PAID UNDER ITEM 0100 PREPARING ROW.

DESIGN

INTERIM REVIEW
DOCUMENT INCOMPLETE. NOT INTENDED FOR PERMIT, BIDDING OR CONSTRUCTION.
ENGINEER: TYLER PAYNE DUBE
P.E. SERIAL NO: 118612
DATE: 1/9/2020

APPROVAL

INTERIM REVIEW
DOCUMENT INCOMPLETE. NOT INTENDED FOR PERMIT, BIDDING OR CONSTRUCTION.
ENGINEER: JOHN A. TYLER
P.E. SERIAL NO: 105193
DATE: 1/9/2020

0 10 20 30 60

SCALE: PLAN 1"= 30'

REV. NO.	DATE	DESCRIPTION	BY

PAPE-DAWSON ENGINEERS
SAN ANTONIO | AUSTIN | HOUSTON | FORT WORTH | DALLAS
2000 NW LOOP 410 | SAN ANTONIO, TX 78213 | 210.375.9000
TBPE FIRM REGISTRATION #470 | TBPLS FIRM REGISTRATION #10028800

City of New Braunfels

KLEIN RD PHASE 2

DEMO PLAN

STA 148+50 TO END PROJECT

SHEET 9 OF 9

DGN:	STATE	PROJECT NO.	ROADWAY
CHK DGN:	TEXAS	NB 18-026	KLEIN RD
DWG:	COUNTY	CITY	SHEET NO.
CHK DWG:	GUADALUPE	NEW BRAUNFELS	36

Plotted on: 1/9/2020

Design Filename: H:\Projects\510\30\03\Design\Civil\Roadway\Demo\5103003dem09.dgn

Plotted on: 1/9/2020

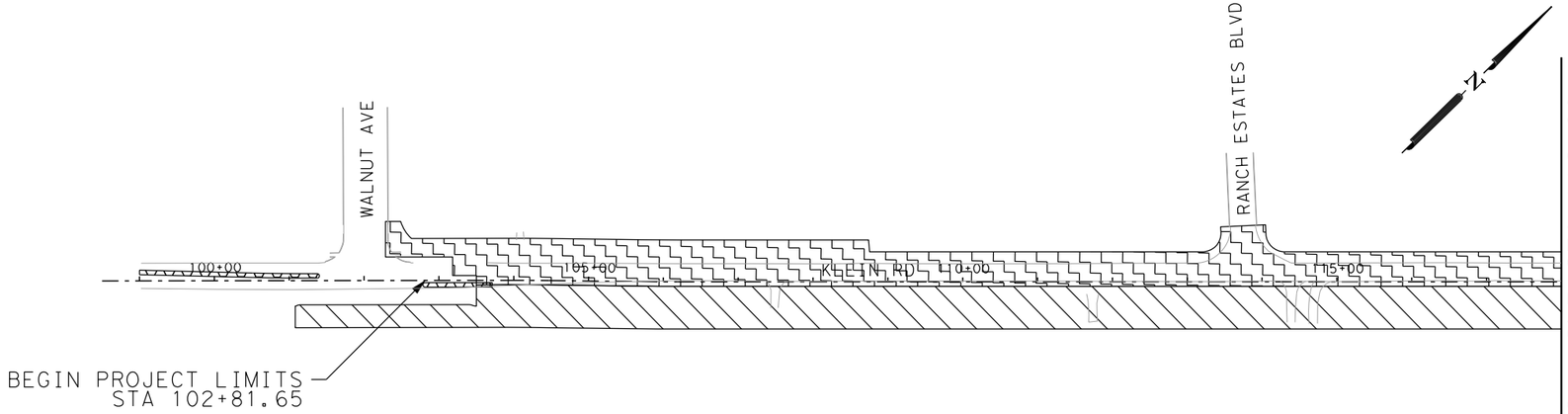

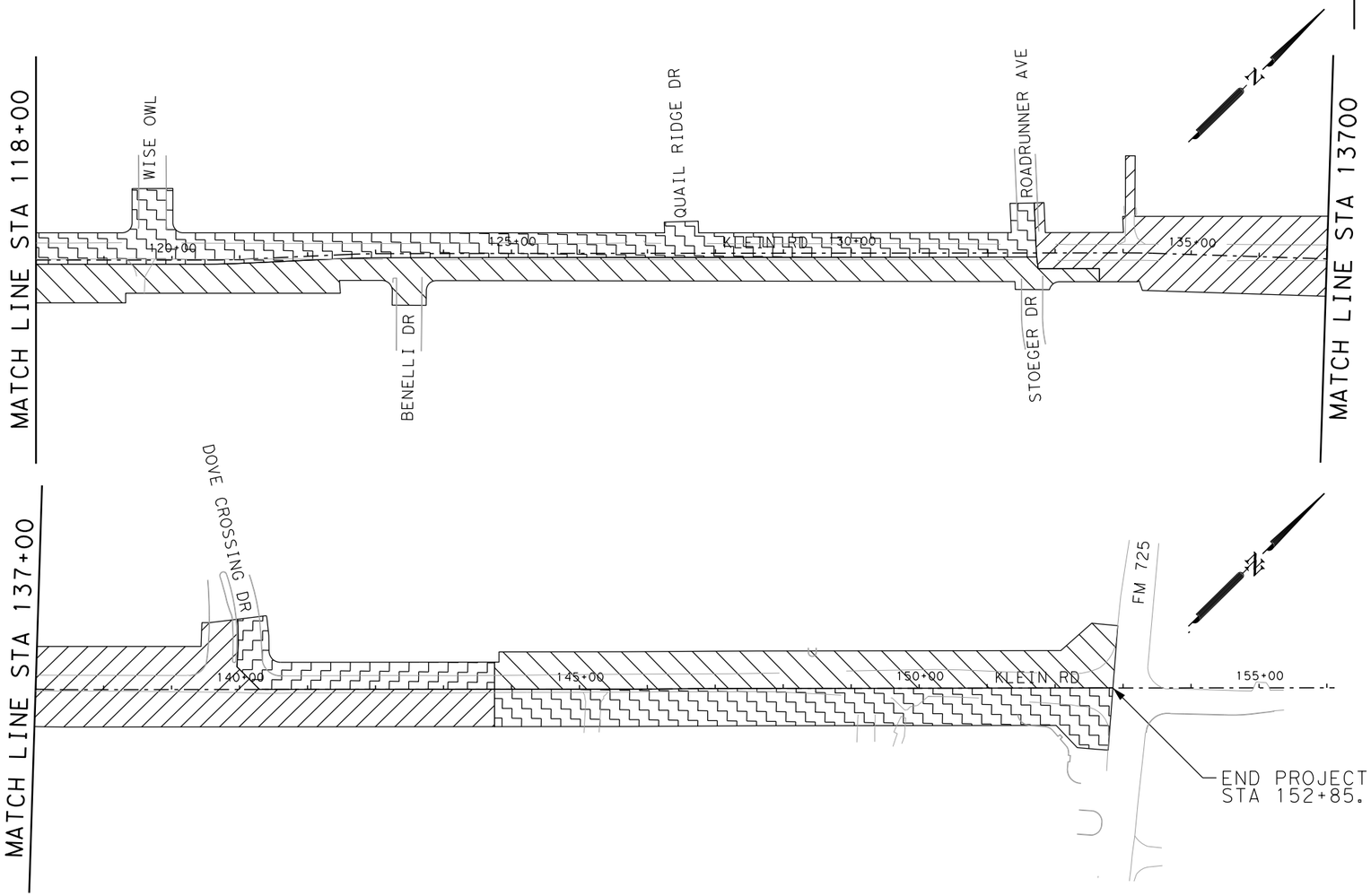

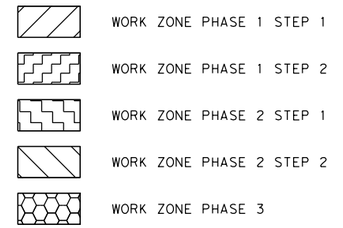

DESIGN

INTERIM REVIEW

DOCUMENT INCOMPLETE. NOT INTENDED FOR PERMIT, BIDDING OR CONSTRUCTION.
ENGINEER: JAKE BOEKAMP
P.E. SERIAL NO: 129661
DATE: 1/9/2020

APPROVAL

INTERIM REVIEW

DOCUMENT INCOMPLETE. NOT INTENDED FOR PERMIT, BIDDING OR CONSTRUCTION.
ENGINEER: JOHN A. TYLER
P.E. SERIAL NO: 105193
DATE: 1/9/2020

0 100 200 300
SCALE: 1"= 200'

REV. NO.	DATE	DESCRIPTION	BY

PAPE-DAWSON ENGINEERS
SAN ANTONIO | AUSTIN | HOUSTON | FORT WORTH | DALLAS
2000 NW LOOP 410 | SAN ANTONIO, TX 78213 | 210.375.9000
TBPE FIRM REGISTRATION #470 | TBPLS FIRM REGISTRATION #10028800

City of New Braunfels

KLEIN RD PHASE 2

TRAFFIC CONTROL PLAN OVERALL PHASING LAYOUT

SHEET 1 OF 1

DGN:	STATE	PROJECT NO.	ROADWAY
CHK DGN:	TEXAS	NB 18-026	KLEIN RD
DWG:	COUNTY	CITY	SHEET NO.
CHK DWG:	GUADALUPE	NEW BRAUNFELS	37

Design Filename: H:\Projects\510\30\03\Design\Civil\TCP\5103003tcp0A.dgn

Plotted on: 1/9/2020

Design Filename: H:\Projects\510\30\03\Design\Civil\TCP\5103003tcpNarr.dgn

DETOURS, BARRICADES, WARNING SIGNS, SEQUENCE OF WORK, ETC.

THE CONTRACTOR'S ATTENTION IS DIRECTED TO THE REQUIREMENTS OF ITEM 7, "LEGAL RELATIONS AND RESPONSIBILITIES TO THE PUBLIC", OF THE STANDARD SPECIFICATIONS. CONTRACTOR TO FOLLOW SEQUENCE OF WORK, UNLESS OTHERWISE APPROVED. IN ADDITION TO THESE REQUIREMENTS, THE FOLLOWING PROVISIONS SHALL ALSO GOVERN ON THIS CONTRACT:

1. SEQUENCE OF WORK

SEQUENCE NOTES:

1. DROP OFF CONDITIONS ADJACENT TO TRAVEL LANES GREATER THAN 2" MUST HAVE A 3:1 SLOPE AT THE END OF EACH DAY.

2. ASPHALT PLACEMENT IN PHASES I THROUGH PHASE III DOES NOT INCLUDE THE FINAL LIFTS.

PHASE I STEP I:

a. SET UP DETOUR AS SHOWN ON DETOUR PLAN TO CLOSE THROUGH ACCESS OF KLEIN ROAD BETWEEN DOVE CROSSING DR AND ROADRUNNER AVE. INSTALL TEMPORARY TRAFFIC CONTROL DEVICES INCLUDING CHANNELIZING DEVICES AND LOW-PROFILE CONCRETE BARRIERS.

b. CONSTRUCT DRAINAGE STRUCTURES PLUGGING THE UPSTREAM ENDS OF NEW STORM DRAINS WITH NO OUTLET AND AT PHASE LINES UNTIL THE NEXT PHASE OF CONSTRUCTION, CONSTRUCT THE ROADWAY ON THE SOUTH SIDE OF KLEIN ROAD AND DOVE CROSSING INTERSECTION, THE EAST SIDE OF KLEIN ROAD FROM THE DOVE CROSSING INTERSECTION TO STATION 143+75, THE NORTH SIDE OF ROADRUNNER AVE INTERSECTION, PROPOSED BRIDGE, AND PROPOSED RETAINING WALLS WITHIN THE WORK ZONE AS SHOWN IN THE PHASE 1 STEP 1 TCP PLANS.

PHASE I STEP 2:

a. MAINTAINING DETOUR ESTABLISHED IN PHASE 1 STEP 1, CONSTRUCT TEMPORARY PAVEMENT. INSTALL TEMPORARY TRAFFIC CONTROL DEVICES INCLUDING PAVEMENT MARKINGS, CHANNELIZING DEVICES, AND LOW-PROFILE CONCRETE BARRIERS.

b. CONSTRUCT DRAINAGE STRUCTURES PLUGGING THE UPSTREAM ENDS OF NEW STORM DRAINS WITH NO OUTLET AND AT PHASE LINES UNTIL THE NEXT PHASE OF CONSTRUCTION, THE NORTH SIDE OF THE KLEIN ROAD AND DOVE CROSSING INTERSECTION, AND THE WEST SIDE OF KLEIN ROAD FROM THE DOVE CROSSING INTERSECTION TO STATION 143+75 WITHIN THE WORK ZONE AS SHOWN IN THE PHASE I STEP 2 TCP PLANS.

c. PHASE II STEP 2 MAY AND SHOULD BE WORKED CONCURRENTLY WITH THE BRIDGE AND RETAINING WALL CONSTRUCTION IN PHASE I STEP 1 ONCE CONSTRUCTION OF THE SOUTH SIDE OF KLEIN ROAD AND DOVE CROSSING INTERSECTION AND THE EAST SIDE OF KLEIN ROAD FROM THE DOVE CROSSING INTERSECTION TO STATION 143+75 IS COMPLETED.

PHASE II STEP 1:

a. CONSTRUCT TEMPORARY PAVEMENT AND TEMPORARY DITCHES, MAINTAINING POSITIVE DRAINAGE AT ALL TIMES. INSTALL TEMPORARY TRAFFIC CONTROL DEVICES INCLUDING PAVEMENT MARKINGS, CHANNELIZING DEVICES, AND LOW-PROFILE CONCRETE BARRIERS.

b. CONSTRUCT DRAINAGE STRUCTURES PLUGGING THE UPSTREAM ENDS OF NEW STORM DRAINS WITH NO OUTLET AND AT PHASE LINES UNTIL THE NEXT PHASE OF CONSTRUCTION, AND THE WEST SIDE OF KLEIN ROAD WITHIN THE WORK ZONE AS SHOWN IN THE PHASE II STEP 1 TCP PLANS.

PHASE II STEP 2:

a. INSTALL TEMPORARY TRAFFIC CONTROL DEVICES INCLUDING PAVEMENT MARKINGS AND CHANNELIZING DEVICES.

b. CONSTRUCT REMAINING DRAINAGE STRUCTURES AND THE EAST SIDE OF KLEIN ROAD WITHIN THE WORK ZONE AS SHOWN IN THE PHASE 2 STEP 2 TCP PLANS.

PHASE III:

a. INSTALL TEMPORARY TRAFFIC CONTROL DEVICES INCLUDING CHANNELIZING DEVICES

c. CONSTRUCT RAISED MEDIANS AS SHOWN IN THE PHASE III TCP PLANS.

PHASE IV:

a. CONSTRUCT FINAL ASPHALT LIFT, STRIPING, AND SIGNING.

b. PERFORM FINAL CLEANUP.

INTERIM REVIEW
DOCUMENT INCOMPLETE. NOT INTENDED FOR PERMIT, BIDDING OR CONSTRUCTION.
ENGINEER: JAKE BOEKAMP
P.E. SERIAL NO: 129661
DATE: 1/9/2020

INTERIM REVIEW
DOCUMENT INCOMPLETE. NOT INTENDED FOR PERMIT, BIDDING OR CONSTRUCTION.
ENGINEER: JOHN A. TYLER
P.E. SERIAL NO: 105193
DATE: 1/9/2020

REV. NO.	DATE	DESCRIPTION	BY

PAPE-DAWSON ENGINEERS
SAN ANTONIO | AUSTIN | HOUSTON | FORT WORTH | DALLAS
2000 NW LOOP 410 | SAN ANTONIO, TX 78213 | 210.375.9000
TBPE FIRM REGISTRATION #470 | TBPLS FIRM REGISTRATION #10028800

City of New Braunfels

KLEIN RD PHASE 2

TRAFFIC CONTROL PLAN NARRATIVE AND SPECIAL NOTES

SHEET 1 OF 1

DGN:	STATE	PROJECT NO.	ROADWAY
CHK DGN:	TEXAS	NB 18-026	KLEIN RD
DWG:	COUNTY	CITY	SHEET NO.
CHK DWG:	GUADALUPE	NEW BRAUNFELS	38

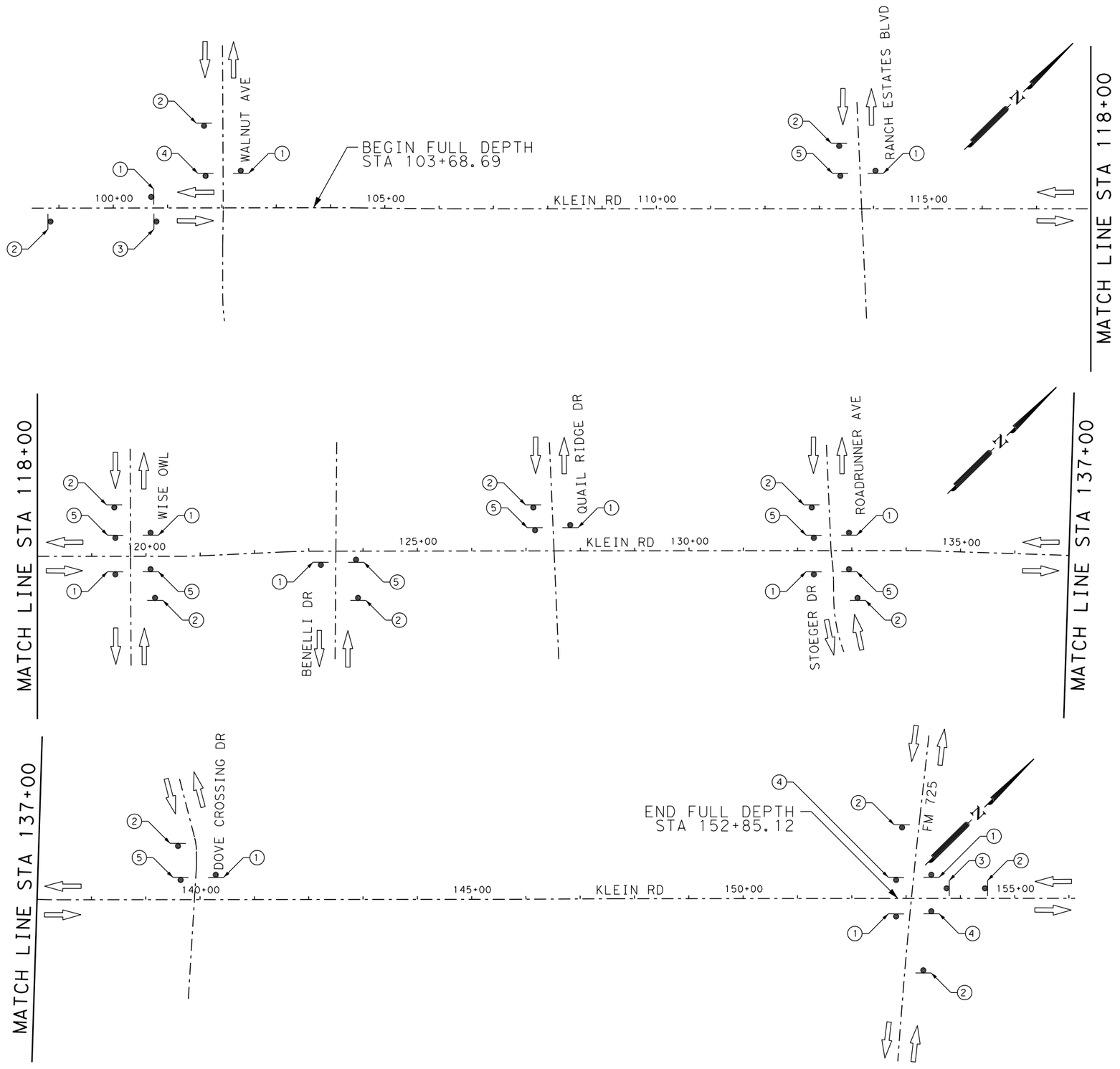

① END ROAD WORK — G20-2a

② ROAD WORK AHEAD (FL) — CW20-1D

③ BEGIN ROAD WORK NEXT X MILES / NAME ADDRESS CITY STATE / CONTRACTOR — SG20-1 w/plaque or SG20-5T, SG20-6

④ ROAD CONSTRUCTION ⇦ NEXT XX MILES — G20-1b

⑤ ROAD WORK ⇦ NEXT MILES / NEXT MILES ⇨ — G20-1a

LEGEND

⇦ TRAFFIC FLOW ARROW

ADVANCE WARNING SIGNS

NOTES:

1. ALL ADVANCED WARNING SIGNS SHALL CONFORM WITH THE LATEST TxDOT BARRICADE AND CONSTRUCTION STANDARDS.

DESIGN

INTERIM REVIEW

DOCUMENT INCOMPLETE. NOT INTENDED FOR PERMIT, BIDDING OR CONSTRUCTION.
ENGINEER: JAKE BOEKAMP
P.E. SERIAL NO: 129661
DATE: 1/9/2020

APPROVAL

INTERIM REVIEW

DOCUMENT INCOMPLETE. NOT INTENDED FOR PERMIT, BIDDING OR CONSTRUCTION.
ENGINEER: JOHN A. TYLER
P.E. SERIAL NO: 105193
DATE: 1/9/2020

NOT TO SCALE

REV. NO.	DATE	DESCRIPTION	BY

PAPE-DAWSON ENGINEERS
SAN ANTONIO | AUSTIN | HOUSTON | FORT WORTH | DALLAS
2000 NW LOOP 410 | SAN ANTONIO, TX 78213 | 210.375.9000
TBPE FIRM REGISTRATION #470 | TBPLS FIRM REGISTRATION #10028800

City of New Braunfels

KLEIN RD PHASE 2

TRAFFIC CONTROL PLAN PROJECT ADVANCE WARNING SIGNS

SHEET 1 OF 1

DGN:	STATE	PROJECT NO.	ROADWAY
CHK DGN:	TEXAS	NB 18-026	KLEIN RD
DWG:	COUNTY	CITY	SHEET NO.
CHK DWG:	GUADALUPE	NEW BRAUNFELS	39

Plotted on: 1/9/2020

Design Filename: H:\Projects\510\30\03\Design\Civil\TCP\5103003tcpAW01.dgn

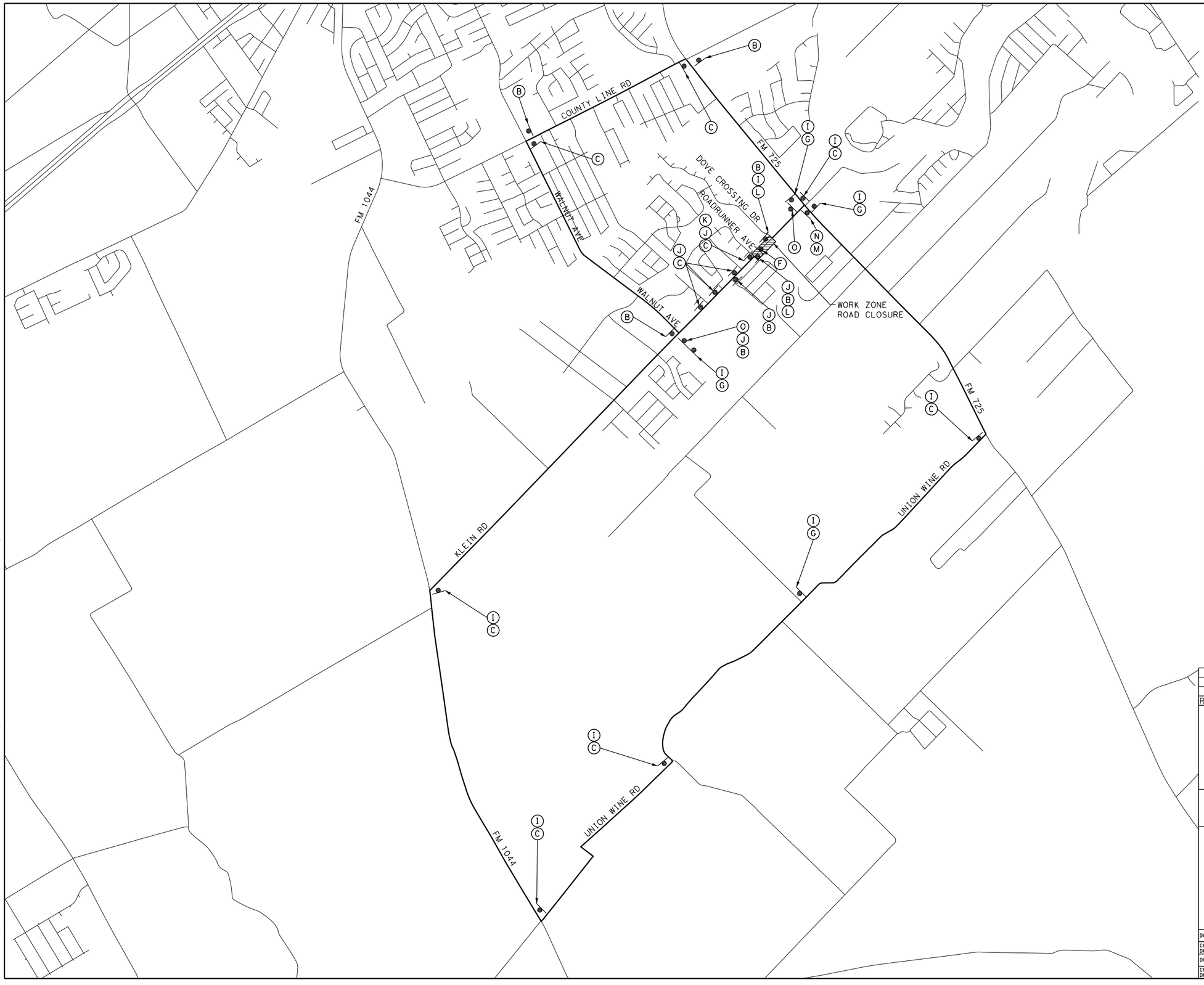

Plotted on: 1/9/2020

Design Filename: H:\Projects\510\30\03\Design\Civil\TCP\5103003tcpDetourMap01.dgn

(A) W20-2D 48"X48"	DETOUR AHEAD	
(B) M4-9L 30"X24"	DETOUR	
(C) M4-9R 30"X24"	DETOUR	
(D) M4-8A 24"X18"	END DETOUR	
(E) CW20-1D 48"X48"	ROAD WORK AHEAD	
(F) R11-2 48"X30"	ROAD CLOSED	
(G) M4-9S 30"X24"	DETOUR	
(H) CW20-3D 48"X48"	ROAD CLOSED AHEAD	
(I)	ROADRUNNER AVE	
(J) M4-9N VARIABLE X 8"	DOVE CROSSING DR	
(K) R3-1 48"X48"		
(L) M4-10L 48"X18"		
(M) M4-10L 48"X18"	DETOUR	
(N) M4-10R 48"X18"	DETOUR	
(O) R11-4 60"X30"	ROAD CLOSED TO THRU TRAFFIC	
●	SIGN	

DESIGN

INTERIM REVIEW

DOCUMENT INCOMPLETE. NOT INTENDED FOR PERMIT, BIDDING OR CONSTRUCTION.
ENGINEER: JAKE BOEKAMP
P.E. SERIAL NO: 129661
DATE: 1/9/2020

APPROVAL

INTERIM REVIEW

DOCUMENT INCOMPLETE. NOT INTENDED FOR PERMIT, BIDDING OR CONSTRUCTION.
ENGINEER: JOHN A. TYLER
P.E. SERIAL NO: 105193
DATE: 1/9/2020

NOT TO SCALE

REV. NO.	DATE	DESCRIPTION	BY

PAPE-DAWSON ENGINEERS
SAN ANTONIO | AUSTIN | HOUSTON | FORT WORTH | DALLAS
2000 NW LOOP 410 | SAN ANTONIO, TX 78213 | 210.375.9000
TBPE FIRM REGISTRATION #470 | TBPLS FIRM REGISTRATION #10028800

City of New Braunfels

KLEIN RD PHASE 2

TRAFFIC CONTROL PLAN DETOUR MAP

SHEET 1 OF 1

DGN:	STATE	PROJECT NO.	ROADWAY
CHK DGN:	TEXAS	NB 18-026	KLEIN RD
DWG:	COUNTY	CITY	SHEET NO.
CHK DWG:	GUADALUPE	NEW BRAUNFELS	40

Plotted on: 1/9/2020

Design Filename: H:\Projects\510\30\03\Design\Civil\TCP\Phase1\5103003tcp101.dgn

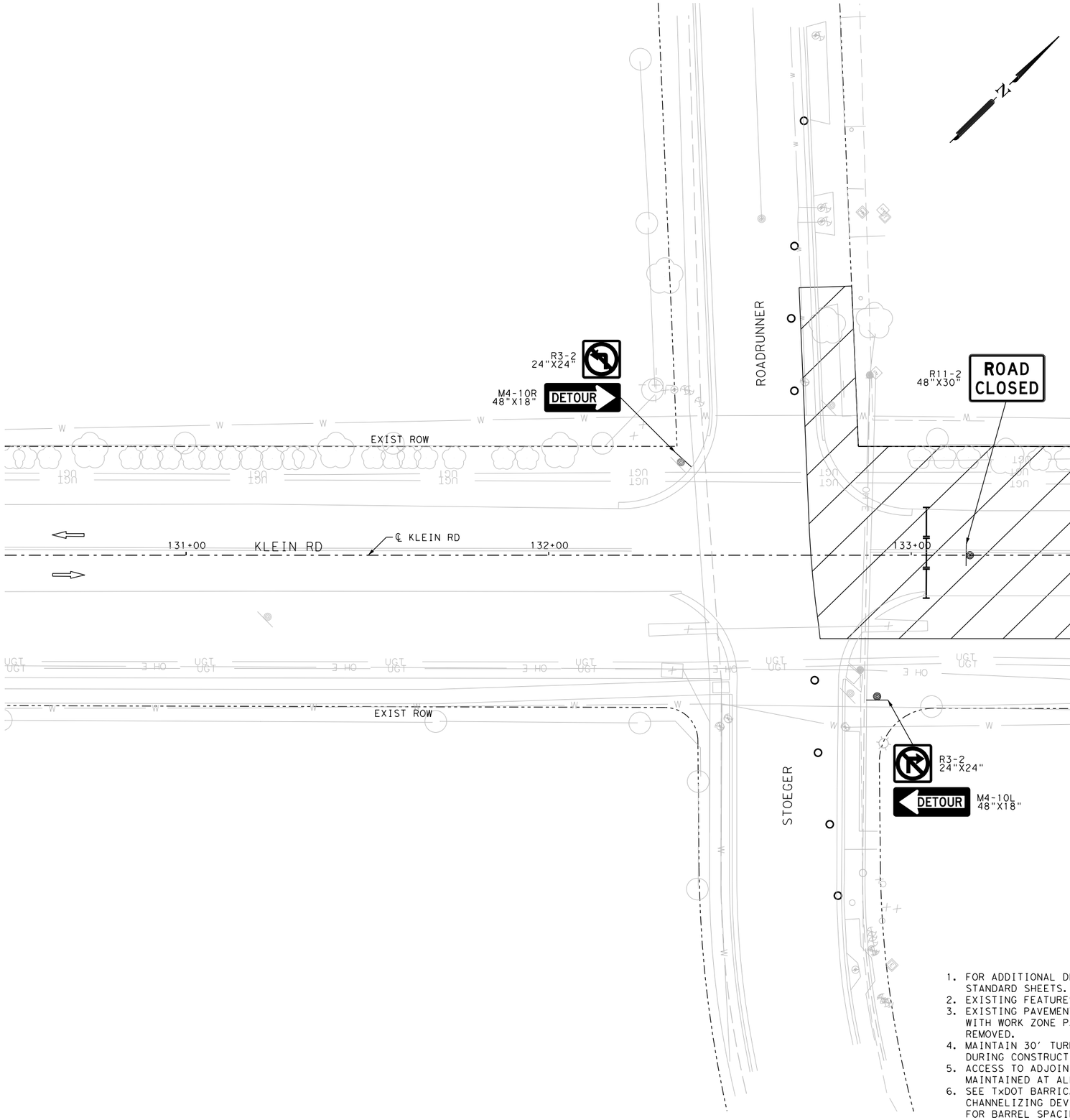

LEGEND

- SIGN
- TYPE III BARRICADE
- TRAFFIC FLOW ARROWS
- TEMPORARY PAVEMENT
- CONSTRUCTION PHASE
- PLASTIC DRUM
- LOW PROFILE CONCRETE BARRIER TYPE 1 AND TYPE 2

A	NON-REMOV (W)4"(SLD)	G	ELIM (8")
B	NON-REMOV (Y)4"(SLD)	H	ELIM (24")
C	NON-REMOV (W)24"(SLD)	I	ELIM (MED NOSE)
D	ELIM (4")	J	REMOV (W)4"(SLD)
E	ELIM (ARROW)	K	REMOV (Y)4"(SLD)
F	ELIM (WORD)	L	REMOV (W)8"(SLD)

DESIGN

INTERIM REVIEW

DOCUMENT INCOMPLETE. NOT INTENDED FOR PERMIT, BIDDING OR CONSTRUCTION.
ENGINEER: JAKE BOEKAMP
P.E. SERIAL NO: 129661
DATE: 1/9/2020

APPROVAL

INTERIM REVIEW

DOCUMENT INCOMPLETE. NOT INTENDED FOR PERMIT, BIDDING OR CONSTRUCTION.
ENGINEER: JOHN A. TYLER
P.E. SERIAL NO: 105193
DATE: 1/9/2020

0 10 20 30 60

SCALE: PLAN 1"= 30'

NOTES:

1. FOR ADDITIONAL DETAILS SEE TxDOT TCP STANDARD SHEETS.
2. EXISTING FEATURES ARE SHOWN SCREENED BACK.
3. EXISTING PAVEMENT MARKINGS CONFLICTING WITH WORK ZONE PAVEMENT MARKINGS SHALL BE REMOVED.
4. MAINTAIN 30' TURNING RADII AT INTERSECTION DURING CONSTRUCTION.
5. ACCESS TO ADJOINING PROPERTIES MUST BE MAINTAINED AT ALL TIMES.
6. SEE TxDOT BARRICADE AND CONSTUCTION CHANNELIZING DEVICES STANDARDS BC (9) 14 FOR BARREL SPACING.

REV.NO.	DATE	DESCRIPTION	BY

PAPE-DAWSON ENGINEERS
SAN ANTONIO | AUSTIN | HOUSTON | FORT WORTH | DALLAS
2000 NW LOOP 410 | SAN ANTONIO, TX 78213 | 210.375.9000
TBPE FIRM REGISTRATION #470 | TBPLS FIRM REGISTRATION #10028800

City of New Braunfels

KLEIN RD PHASE 2

TRAFFIC CONTROL PLAN PHASE 1 STEP 1

SHEET 1 OF 6

DGN:	STATE	PROJECT NO.	ROADWAY
CHK DGN:	TEXAS	NB 18-026	KLEIN RD
DWG:	COUNTY	CITY	SHEET NO.
CHK DWG:	GUADALUPE	NEW BRAUNFELS	41

Plotted on: 1/9/2020

Design Filename: H:\Projects\510\30\03\Design\Civil\TCP\Phase1\5103003tcp102.dgn

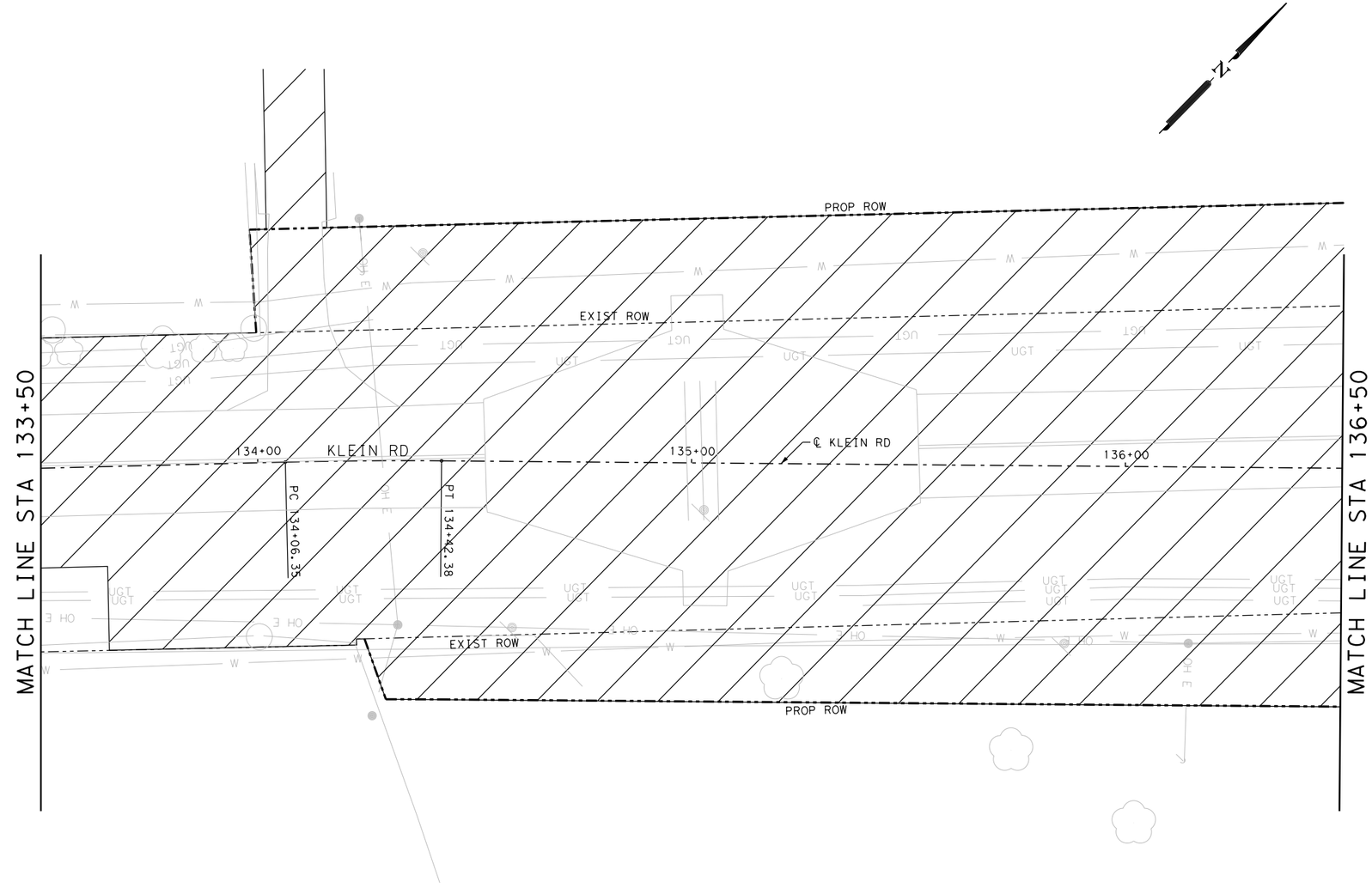

LEGEND

- SIGN
- TYPE III BARRICADE
- TRAFFIC FLOW ARROWS
- TEMPORARY PAVEMENT
- CONSTRUCTION PHASE
- PLASTIC DRUM
- LOW PROFILE CONCRETE BARRIER TYPE 1 AND TYPE 2

A	NON-REMOV (W)4"(SLD)	G	ELIM (8")
B	NON-REMOV (Y)4"(SLD)	H	ELIM (24")
C	NON-REMOV (W)24"(SLD)	I	ELIM (MED NOSE)
D	ELIM (4")	J	REMOV (W)4"(SLD)
E	ELIM (ARROW)	K	REMOV (Y)4"(SLD)
F	ELIM (WORD)	L	REMOV (W)8"(SLD)

DESIGN

INTERIM REVIEW

DOCUMENT INCOMPLETE. NOT INTENDED FOR PERMIT, BIDDING OR CONSTRUCTION.
ENGINEER: JAKE BOEKAMP
P.E. SERIAL NO: 129661
DATE: 1/9/2020

APPROVAL

INTERIM REVIEW

DOCUMENT INCOMPLETE. NOT INTENDED FOR PERMIT, BIDDING OR CONSTRUCTION.
ENGINEER: JOHN A. TYLER
P.E. SERIAL NO: 105193
DATE: 1/9/2020

0 10 20 30 60

SCALE: PLAN 1"= 30'

REV.NO.	DATE	DESCRIPTION	BY

PAPE-DAWSON ENGINEERS
SAN ANTONIO | AUSTIN | HOUSTON | FORT WORTH | DALLAS
2000 NW LOOP 410 | SAN ANTONIO, TX 78213 | 210.375.9000
TBPE FIRM REGISTRATION #470 | TBPLS FIRM REGISTRATION #10028800

City of New Braunfels

KLEIN RD PHASE 2

TRAFFIC CONTROL PLAN PHASE 1 STEP 1

SHEET 2 OF 6

DGN:	STATE	PROJECT NO.	ROADWAY
CHK DGN:	TEXAS	NB 18-026	KLEIN RD
DWG:	COUNTY	CITY	SHEET NO.
CHK DWG:	GUADALUPE	NEW BRAUNFELS	42

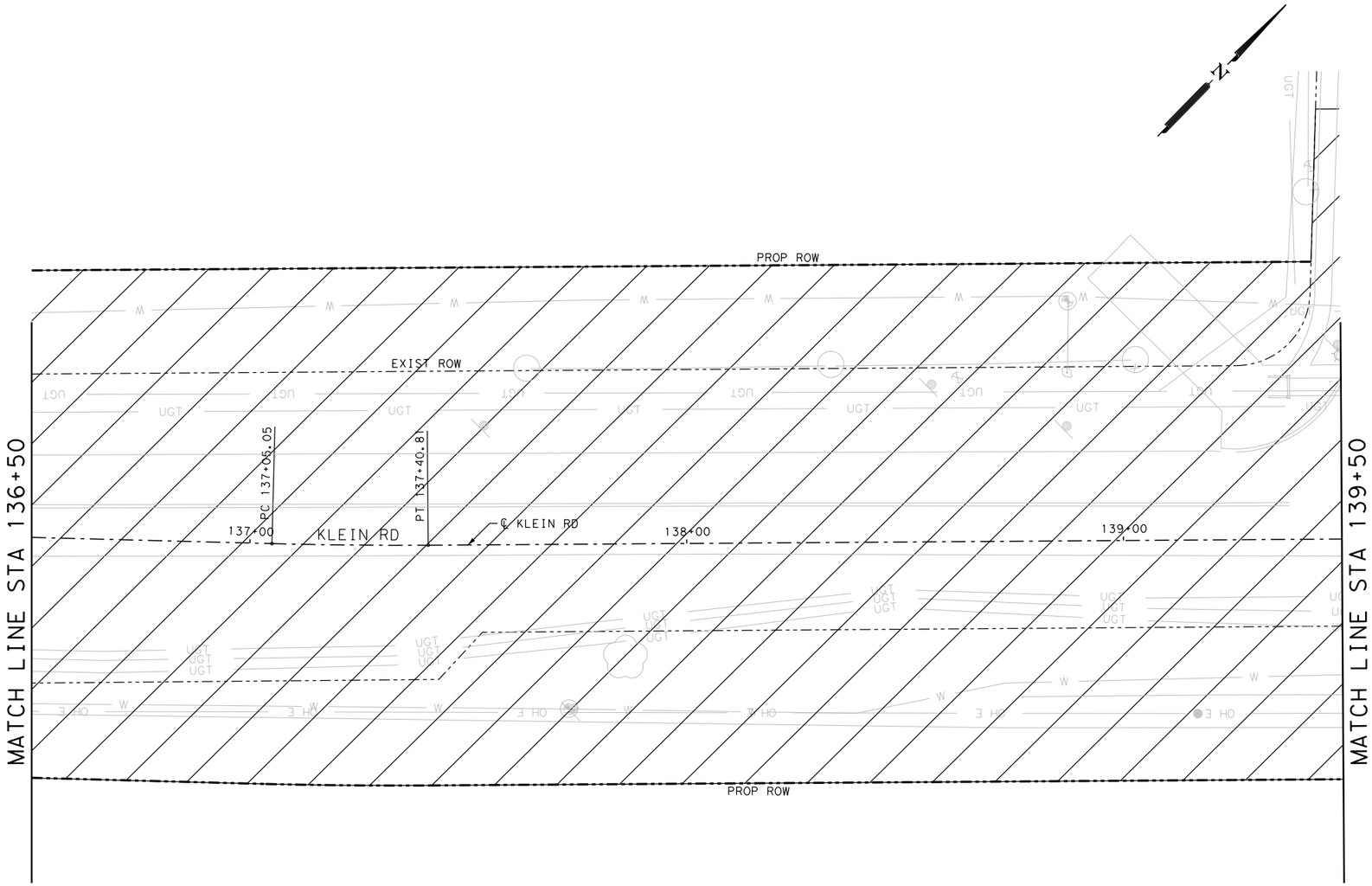

LEGEND

- SIGN
- TYPE III BARRICADE
- TRAFFIC FLOW ARROWS
- TEMPORARY PAVEMENT
- CONSTRUCTION PHASE
- PLASTIC DRUM
- LOW PROFILE CONCRETE BARRIER TYPE 1 AND TYPE 2

A	NON-REMOV (W)4"(SLD)	G	ELIM (8")
B	NON-REMOV (Y)4"(SLD)	H	ELIM (24")
C	NON-REMOV (W)24"(SLD)	I	ELIM (MED NOSE)
D	ELIM (4")	J	REMOV (W)4"(SLD)
E	ELIM (ARROW)	K	REMOV (Y)4"(SLD)
F	ELIM (WORD)	L	REMOV (W)8"(SLD)

DESIGN

INTERIM REVIEW
DOCUMENT INCOMPLETE. NOT INTENDED FOR PERMIT, BIDDING OR CONSTRUCTION.
ENGINEER: JAKE BOEKAMP
P.E. SERIAL NO: 129661
DATE: 1/9/2020

APPROVAL

INTERIM REVIEW
DOCUMENT INCOMPLETE. NOT INTENDED FOR PERMIT, BIDDING OR CONSTRUCTION.
ENGINEER: JOHN A. TYLER
P.E. SERIAL NO: 105193
DATE: 1/9/2020

0 10 20 30 60

SCALE: PLAN 1" = 30'

REV. NO.	DATE	DESCRIPTION	BY

PAPE-DAWSON ENGINEERS
SAN ANTONIO | AUSTIN | HOUSTON | FORT WORTH | DALLAS
2000 NW LOOP 410 | SAN ANTONIO, TX 78213 | 210.375.9000
TBPE FIRM REGISTRATION #470 | TBPLS FIRM REGISTRATION #10028800

City of New Braunfels

KLEIN RD PHASE 2

TRAFFIC CONTROL PLAN PHASE 1 STEP 1

SHEET 3 OF 6

DGN:	STATE	PROJECT NO.	ROADWAY
CHK DGN:	TEXAS	NB 18-026	KLEIN RD
DWG:	COUNTY	CITY	SHEET NO.
CHK DWG:	GUADALUPE	NEW BRAUNFELS	43

Plotted on: 1/9/2020

Design Filename: H:\Projects\510\30\03\Design\Civil\TCP\Phase1\5103003tcp103.dgn

ITEM	DESCRIPTION	UNIT	QTY
0512-6009	PORT CTB (FUR & INST)(LOW PROF)(TY 1)	LF	335
0512-6010	PORT CTB (FUR & INST)(LOW PROF)(TY 2)	LF	20
0512-6045	PORT CTB (STKPL)(LOW PROF)(TY 1)	LF	335

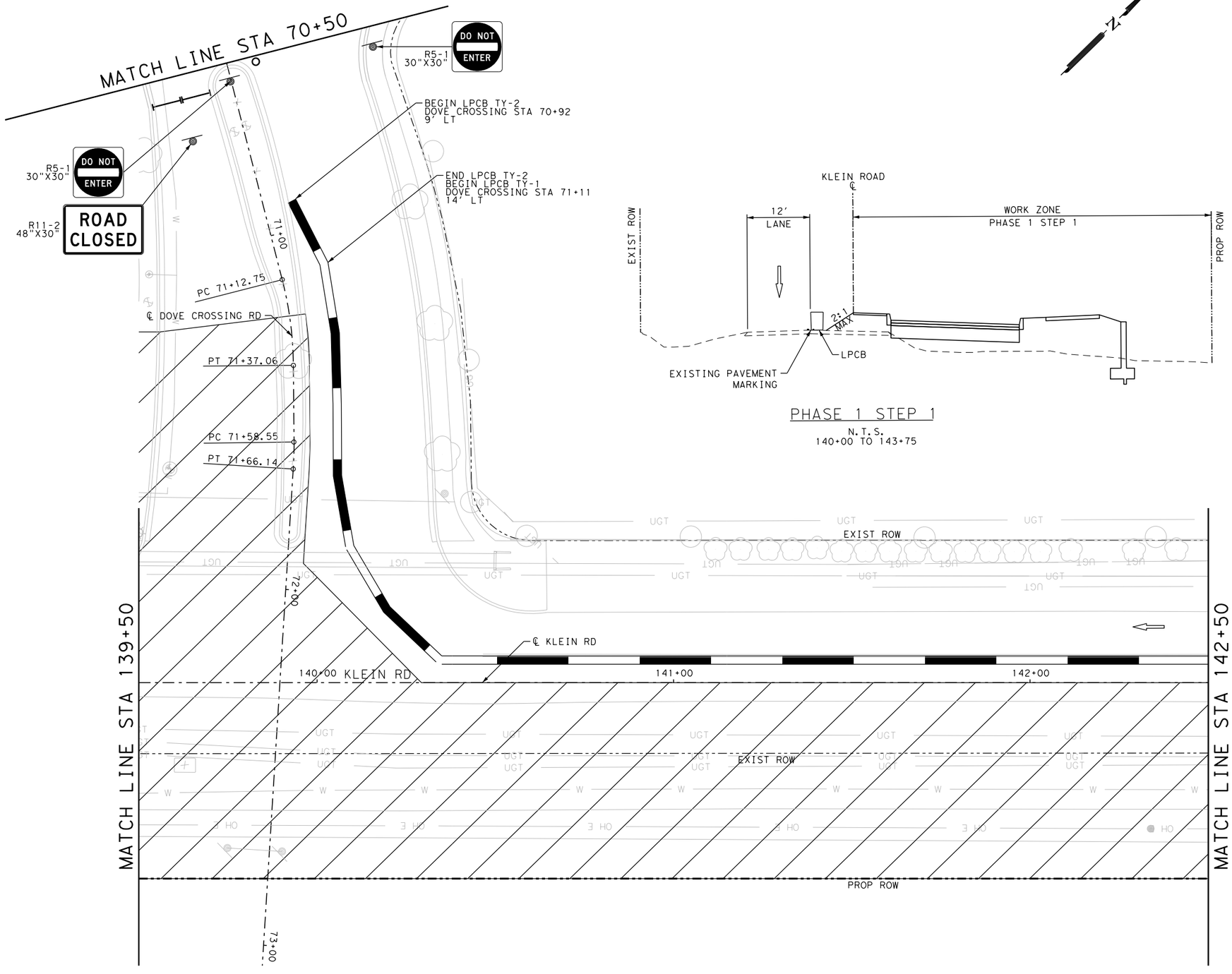

PHASE 1 STEP 1

N.T.S.
140+00 TO 143+75

LEGEND

- SIGN
- TYPE III BARRICADE
- TRAFFIC FLOW ARROWS
- TEMPORARY PAVEMENT
- CONSTRUCTION PHASE
- PLASTIC DRUM
- LOW PROFILE CONCRETE BARRIER TYPE 1 AND TYPE 2

A	NON-REMOV (W)4"(SLD)	G	ELIM (8")
B	NON-REMOV (Y)4"(SLD)	H	ELIM (24")
C	NON-REMOV (W)24"(SLD)	I	ELIM (MED NOSE)
D	ELIM (4")	J	REMOV (W)4"(SLD)
E	ELIM (ARROW)	K	REMOV (Y)4"(SLD)
F	ELIM (WORD)	L	REMOV (W)8"(SLD)

DESIGN

INTERIM REVIEW

DOCUMENT INCOMPLETE. NOT INTENDED FOR PERMIT, BIDDING OR CONSTRUCTION.
ENGINEER: JAKE BOEKAMP
P.E. SERIAL NO: 129661
DATE: 1/9/2020

APPROVAL

INTERIM REVIEW

DOCUMENT INCOMPLETE. NOT INTENDED FOR PERMIT, BIDDING OR CONSTRUCTION.
ENGINEER: JOHN A. TYLER
P.E. SERIAL NO: 105193
DATE: 1/9/2020

0 10 20 30 60

SCALE: PLAN 1"= 30'

REV. NO.	DATE	DESCRIPTION	BY

PAPE-DAWSON ENGINEERS
SAN ANTONIO | AUSTIN | HOUSTON | FORT WORTH | DALLAS
2000 NW LOOP 410 | SAN ANTONIO, TX 78213 | 210.375.9000
TBPE FIRM REGISTRATION #470 | TBPLS FIRM REGISTRATION #10028800

City of New Braunfels

KLEIN RD PHASE 2

TRAFFIC CONTROL PLAN PHASE 1 STEP 1

SHEET 4 OF 6

DGN:	STATE	PROJECT NO.	ROADWAY
CHK DGN:	TEXAS	NB 18-026	KLEIN RD
DWG:	COUNTY	CITY	SHEET NO.
CHK DWG:	GUADALUPE	NEW BRAUNFELS	44

Plotted on: 1/9/2020

Design Filename: H:\Projects\510\30\03\Design\Civil\TCP\Phase1\5103003tcp104.dgn

ITEM	DESCRIPTION	UNIT	QTY
0512-6009	PORT CTB (FUR & INST)(LOW PROF)(TY 1)	LF	125
0512-6010	PORT CTB (FUR & INST)(LOW PROF)(TY 2)	LF	20
0512-6045	PORT CTB (STKPL)(LOW PROF)(TY 1)	LF	85

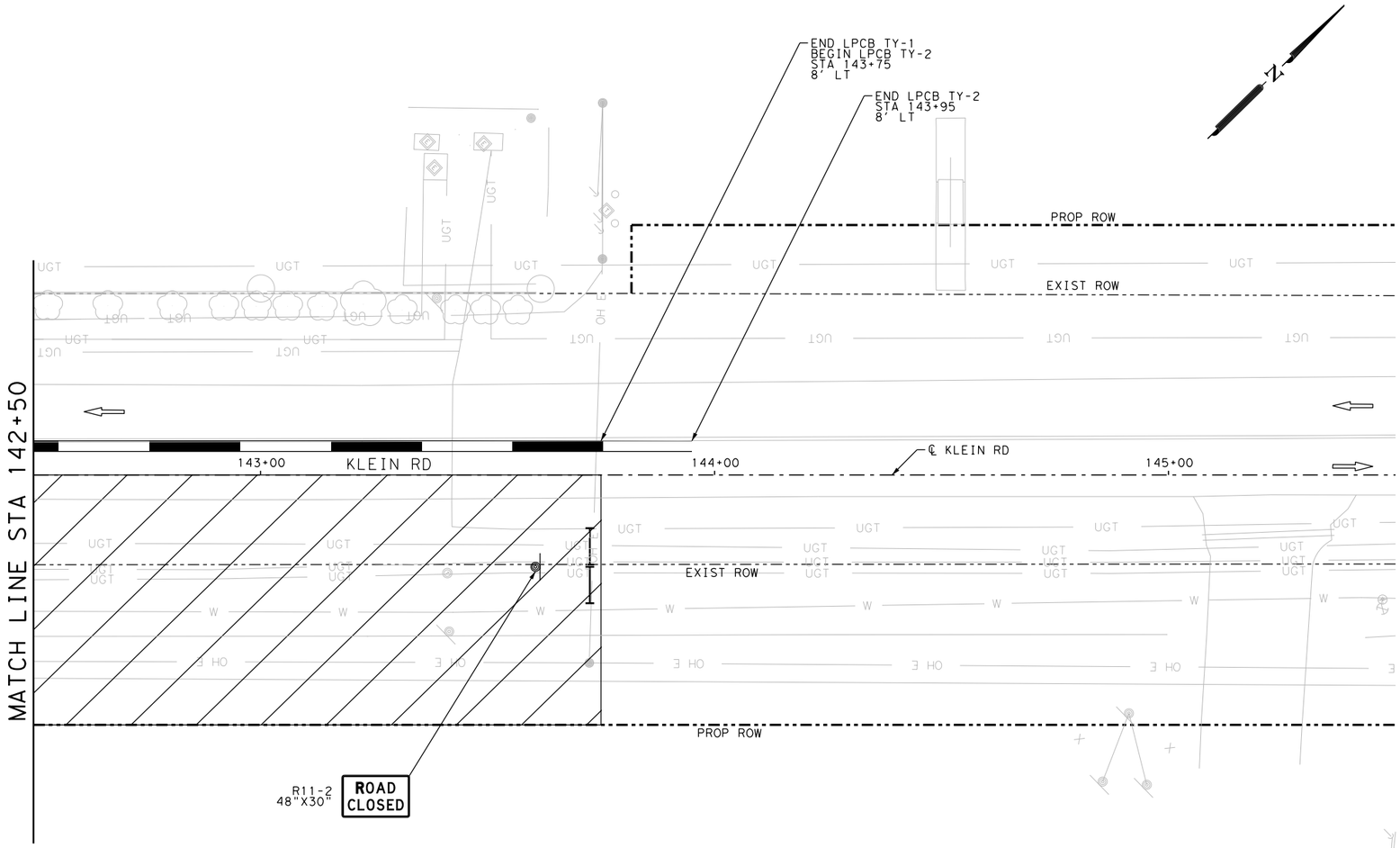

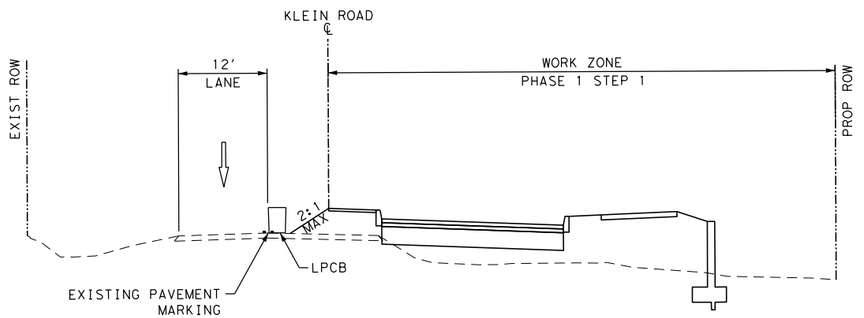

PHASE 1 STEP 1

N.T.S.
140+00 TO 143+75

LEGEND

- SIGN
- TYPE III BARRICADE
- TRAFFIC FLOW ARROWS
- TEMPORARY PAVEMENT
- CONSTRUCTION PHASE
- PLASTIC DRUM
- LOW PROFILE CONCRETE BARRIER TYPE 1 AND TYPE 2

A	NON-REMOV (W)4"(SLD)	G	ELIM (8")
B	NON-REMOV (Y)4"(SLD)	H	ELIM (24")
C	NON-REMOV (W)24"(SLD)	I	ELIM (MED NOSE)
D	ELIM (4")	J	REMOV (W)4"(SLD)
E	ELIM (ARROW)	K	REMOV (Y)4"(SLD)
F	ELIM (WORD)	L	REMOV (W)8"(SLD)

DESIGN

INTERIM REVIEW
DOCUMENT INCOMPLETE. NOT INTENDED FOR PERMIT, BIDDING OR CONSTRUCTION.
ENGINEER: JAKE BOEKAMP
P.E. SERIAL NO: 129661
DATE: 1/9/2020

APPROVAL

INTERIM REVIEW
DOCUMENT INCOMPLETE. NOT INTENDED FOR PERMIT, BIDDING OR CONSTRUCTION.
ENGINEER: JOHN A. TYLER
P.E. SERIAL NO: 105193
DATE: 1/9/2020

0 10 20 30 60

SCALE: PLAN 1" = 30'

REV. NO.	DATE	DESCRIPTION	BY

PAPE-DAWSON ENGINEERS
SAN ANTONIO | AUSTIN | HOUSTON | FORT WORTH | DALLAS
2000 NW LOOP 410 | SAN ANTONIO, TX 78213 | 210.375.9000
TBPE FIRM REGISTRATION #470 | TBPLS FIRM REGISTRATION #10028800

City of New Braunfels

KLEIN RD PHASE 2

TRAFFIC CONTROL PLAN PHASE 1 STEP 1

SHEET 5 OF 6

DGN:	STATE	PROJECT NO.	ROADWAY
CHK DGN:	TEXAS	NB 18-026	KLEIN RD
DWG:	COUNTY	CITY	SHEET NO.
CHK DWG:	GUADALUPE	NEW BRAUNFELS	45

Plotted on: 1/9/2020

Design Filename: H:\Projects\510\30\03\Design\Civil\TCP\Phase1\5103003tcp105.dgn

Plotted on: 1/9/2020

Design Filename: H:\Projects\510\30\03\Design\Civil\TCP\Phase1\5103003tcp106.dgn

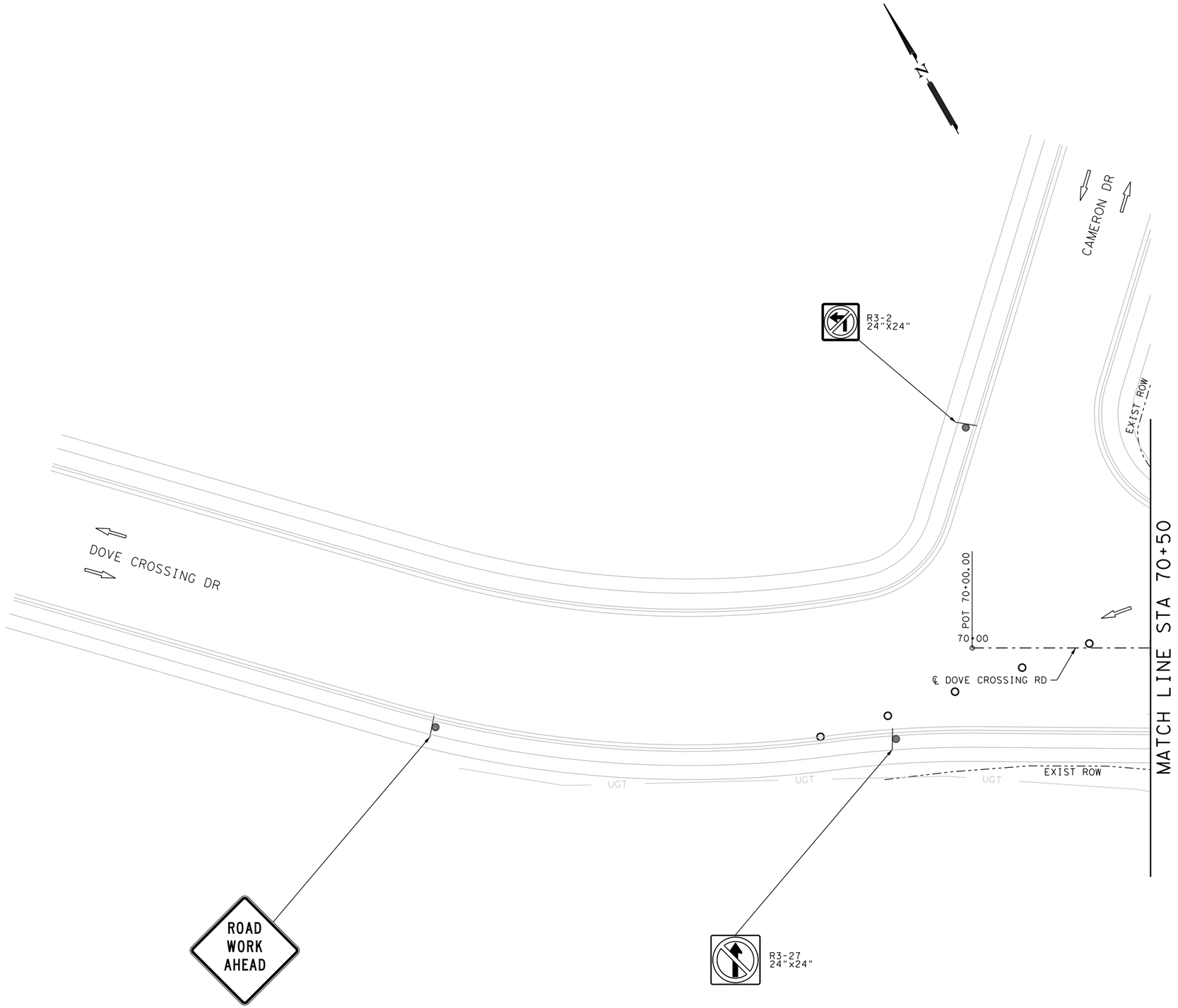

LEGEND

- SIGN
- TYPE III BARRICADE
- TRAFFIC FLOW ARROWS
- TEMPORARY PAVEMENT
- CONSTRUCTION PHASE
- PLASTIC DRUM
- LOW PROFILE CONCRETE BARRIER TYPE 1 AND TYPE 2

A	NON-REMOV (W)4"(SLD)	G	ELIM (8")
B	NON-REMOV (Y)4"(SLD)	H	ELIM (24")
C	NON-REMOV (W)24"(SLD)	I	ELIM (MED NOSE)
D	ELIM (4")	J	REMOV (W)4"(SLD)
E	ELIM (ARROW)	K	REMOV (Y)4"(SLD)
F	ELIM (WORD)	L	REMOV (W)8"(SLD)

DESIGN

INTERIM REVIEW
DOCUMENT INCOMPLETE. NOT INTENDED FOR PERMIT, BIDDING OR CONSTRUCTION.
ENGINEER: JAKE BOEKAMP
P.E. SERIAL NO: 129661
DATE: 1/9/2020

APPROVAL

INTERIM REVIEW
DOCUMENT INCOMPLETE. NOT INTENDED FOR PERMIT, BIDDING OR CONSTRUCTION.
ENGINEER: JOHN A. TYLER
P.E. SERIAL NO: 105193
DATE: 1/9/2020

0 10 20 30 60

SCALE: PLAN 1"= 30'

REV. NO.	DATE	DESCRIPTION	BY

PAPE-DAWSON ENGINEERS
SAN ANTONIO | AUSTIN | HOUSTON | FORT WORTH | DALLAS
2000 NW LOOP 410 | SAN ANTONIO, TX 78213 | 210.375.9000
TBPE FIRM REGISTRATION #470 | TBPLS FIRM REGISTRATION #10028800

City of New Braunfels

KLEIN RD PHASE 2

TRAFFIC CONTROL PLAN PHASE 1 STEP 1

SHEET 6 OF 6

DGN:	STATE	PROJECT NO.	ROADWAY
CHK DGN:	TEXAS	NB 18-026	KLEIN RD
DWG:	COUNTY	CITY	SHEET NO.
CHK DWG:	GUADALUPE	NEW BRAUNFELS	46

ITEM	DESCRIPTION	UNIT	QTY
0512-6033	PORT CTB (MOVE)(LOW PROF)(TY 1)	LF	40
0512-6034	PORT CTB (MOVE)(LOW PROF)(TY 2)	LF	40
0662-6004	WK ZN PAV MRK NON-REMOV (W)4"(SLD)	LF	237
0662-6034	WK ZN PAV MRK NON-REMOV (Y)4"(SLD)	LF	332

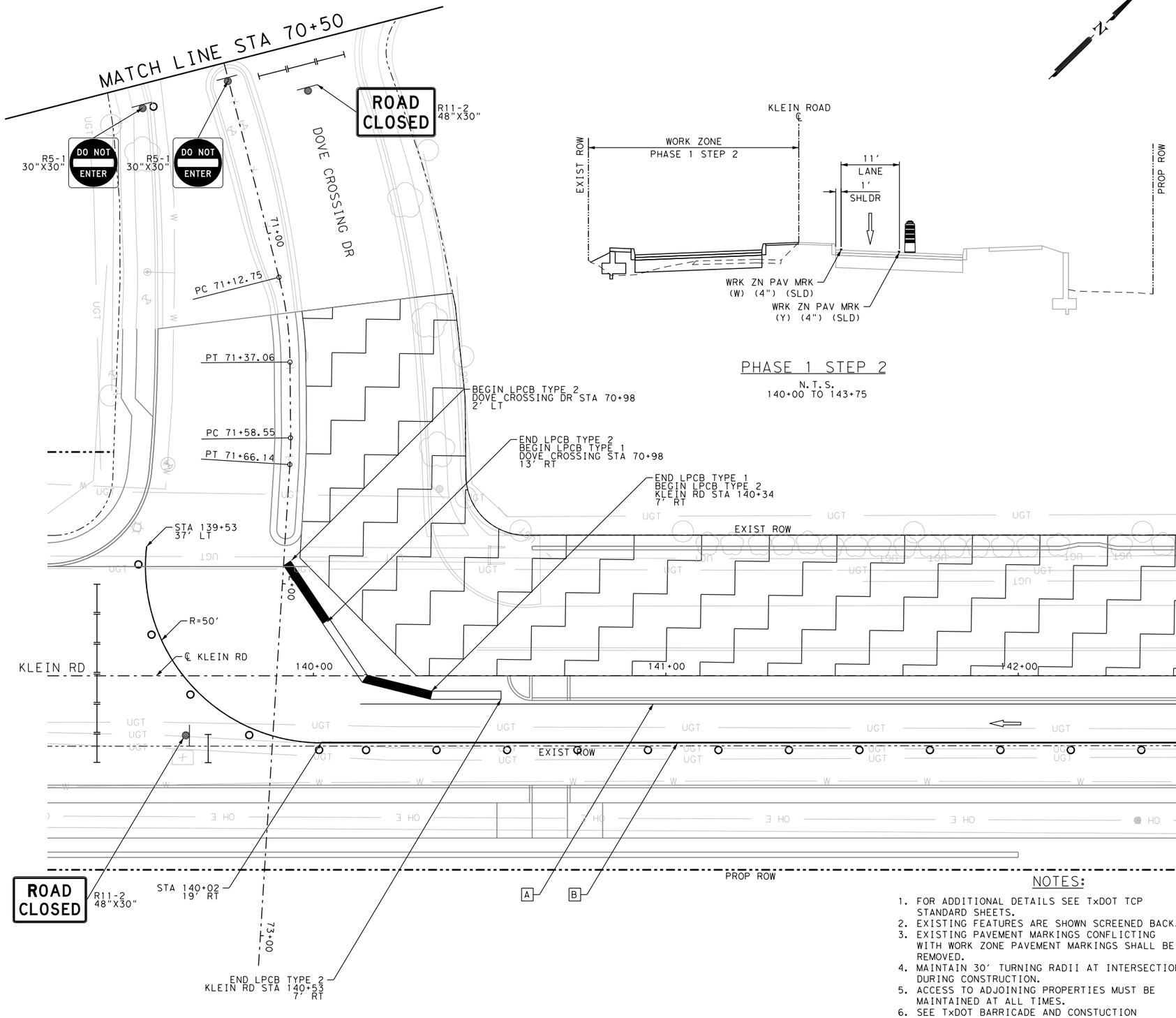

PHASE 1 STEP 2

N.T.S.
140+00 TO 143+75

NOTES:

1. FOR ADDITIONAL DETAILS SEE TxDOT TCP STANDARD SHEETS.
2. EXISTING FEATURES ARE SHOWN SCREENED BACK.
3. EXISTING PAVEMENT MARKINGS CONFLICTING WITH WORK ZONE PAVEMENT MARKINGS SHALL BE REMOVED.
4. MAINTAIN 30' TURNING RADII AT INTERSECTION DURING CONSTRUCTION.
5. ACCESS TO ADJOINING PROPERTIES MUST BE MAINTAINED AT ALL TIMES.
6. SEE TxDOT BARRICADE AND CONSTUCTION CHANNELIZING DEVICES STANDARDS BC (9) 14 FOR BARREL SPACING.

LEGEND

- SIGN
- TYPE III BARRICADE
- TRAFFIC FLOW ARROWS
- TEMPORARY PAVEMENT
- CONSTRUCTION PHASE
- PLASTIC DRUM
- LOW PROFILE CONCRETE BARRIER TYPE 1 AND TYPE 2

A	NON-REMOV (W)4"(SLD)	G	ELIM (8")
B	NON-REMOV (Y)4"(SLD)	H	ELIM (24")
C	NON-REMOV (W)24"(SLD)	I	ELIM (MED NOSE)
D	ELIM (4")	J	REMOV (W)4"(SLD)
E	ELIM (ARROW)	K	REMOV (Y)4"(SLD)
F	ELIM (WORD)	L	REMOV (W)8"(SLD)

DESIGN

INTERIM REVIEW

DOCUMENT INCOMPLETE. NOT INTENDED FOR PERMIT, BIDDING OR CONSTRUCTION.
ENGINEER: JAKE BOEKAMP
P.E. SERIAL NO: 129661
DATE: 1/9/2020

APPROVAL

INTERIM REVIEW

DOCUMENT INCOMPLETE. NOT INTENDED FOR PERMIT, BIDDING OR CONSTRUCTION.
ENGINEER: JOHN A. TYLER
P.E. SERIAL NO: 105193
DATE: 1/9/2020

0 10 20 30 60

SCALE: PLAN 1"= 30'

REV. NO.	DATE	DESCRIPTION	BY

PAPE-DAWSON ENGINEERS
SAN ANTONIO | AUSTIN | HOUSTON | FORT WORTH | DALLAS
2000 NW LOOP 410 | SAN ANTONIO, TX 78213 | 210.375.9000
TBPE FIRM REGISTRATION #470 | TBPLS FIRM REGISTRATION #10028800

City of New Braunfels

KLEIN RD PHASE 2

TRAFFIC CONTROL PLAN PHASE 1 STEP 2

SHEET 1 OF 4

DGN:	STATE	PROJECT NO.	ROADWAY
CHK DGN:	TEXAS	NB 18-026	KLEIN RD
DWG:	COUNTY	CITY	SHEET NO.
CHK DWG:	GUADALUPE	NEW BRAUNFELS	47

Plotted on: 1/9/2020

Design Filename: H:\Projects\510\30\03\Design\Civil\TCP\Phase1\5103003tcp1A01.dgn

ITEM	DESCRIPTION	UNIT	QTY
0508-6001	CONSTRUCTING DETOURS	SY	135
0662-6004	WK ZN PAV MRK NON-REMOV (W)4"(SLD)	LF	316
0662-6034	WK ZN PAV MRK NON-REMOV (Y)4"(SLD)	LF	345
0677-6001	ELIM EXT PAV MRK & MRKS (4")	LF	350

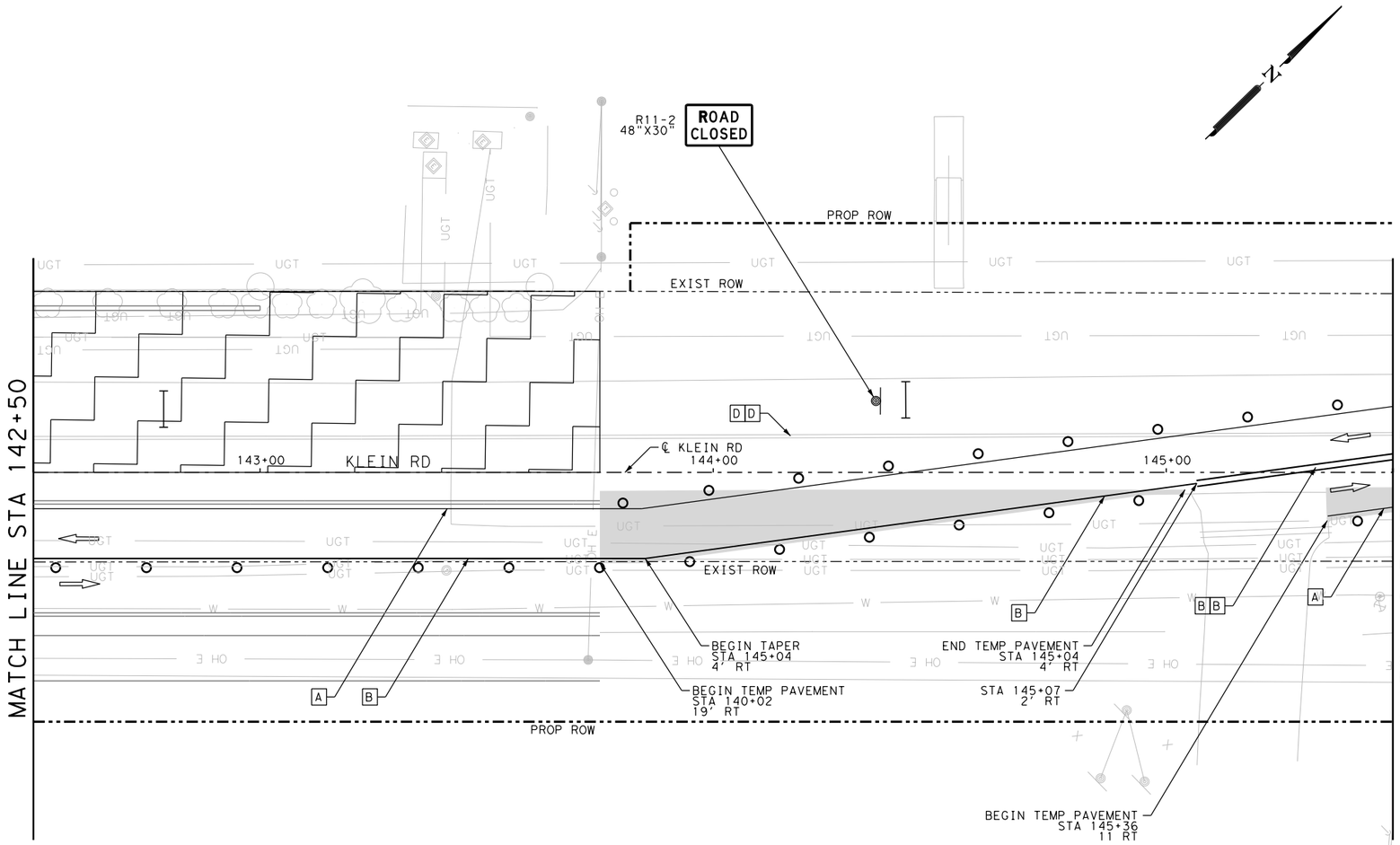

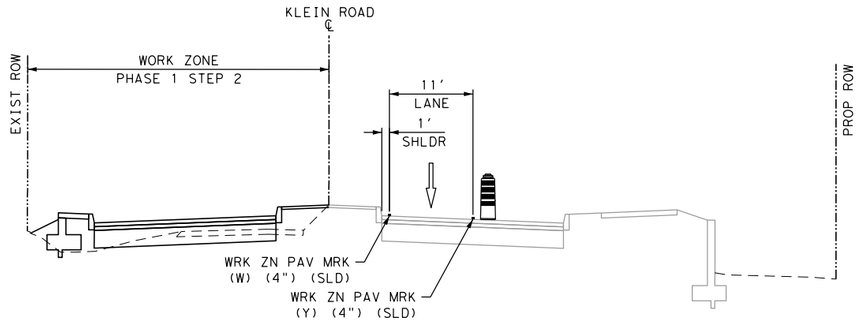

PHASE 1 STEP 2

N.T.S.

140+00 TO 143+75

LEGEND

- SIGN
- TYPE III BARRICADE
- TRAFFIC FLOW ARROWS
- TEMPORARY PAVEMENT
- CONSTRUCTION PHASE
- PLASTIC DRUM
- LOW PROFILE CONCRETE BARRIER TYPE 1 AND TYPE 2

A	NON-REMOV (W)4"(SLD)	G	ELIM (8")
B	NON-REMOV (Y)4"(SLD)	H	ELIM (24")
C	NON-REMOV (W)24"(SLD)	I	ELIM (MED NOSE)
D	ELIM (4")	J	REMOV (W)4"(SLD)
E	ELIM (ARROW)	K	REMOV (Y)4"(SLD)
F	ELIM (WORD)	L	REMOV (W)8"(SLD)

DESIGN

INTERIM REVIEW

DOCUMENT INCOMPLETE. NOT INTENDED FOR PERMIT, BIDDING OR CONSTRUCTION.
ENGINEER: JAKE BOEKAMP
P.E. SERIAL NO: 129661
DATE: 1/9/2020

APPROVAL

INTERIM REVIEW

DOCUMENT INCOMPLETE. NOT INTENDED FOR PERMIT, BIDDING OR CONSTRUCTION.
ENGINEER: JOHN A. TYLER
P.E. SERIAL NO: 105193
DATE: 1/9/2020

0 10 20 30 60

SCALE: PLAN 1"= 30'

REV. NO.	DATE	DESCRIPTION	BY

PAPE-DAWSON ENGINEERS
SAN ANTONIO | AUSTIN | HOUSTON | FORT WORTH | DALLAS
2000 NW LOOP 410 | SAN ANTONIO, TX 78213 | 210.375.9000
TBPE FIRM REGISTRATION #470 | TBPLS FIRM REGISTRATION #10028800

City of New Braunfels

KLEIN RD PHASE 2

TRAFFIC CONTROL PLAN PHASE 1 STEP 2

SHEET 2 OF 4

DGN:	STATE	PROJECT NO.	ROADWAY
CHK DGN:	TEXAS	NB 18-026	KLEIN RD
DWG:	COUNTY	CITY	SHEET NO.
CHK DWG:	GUADALUPE	NEW BRAUNFELS	48

Plotted on: 1/9/2020

Design Filename: H:\Projects\510\30\03\Design\Civil\TCP\Phase1\5103003tcp1A02.dgn

ITEM	DESCRIPTION	UNIT	QTY
0508-6001	CONSTRUCTING DETOURS	SY	11
0677-6001	ELIM EXT PAV MRK & MRKS (4")	LF	80

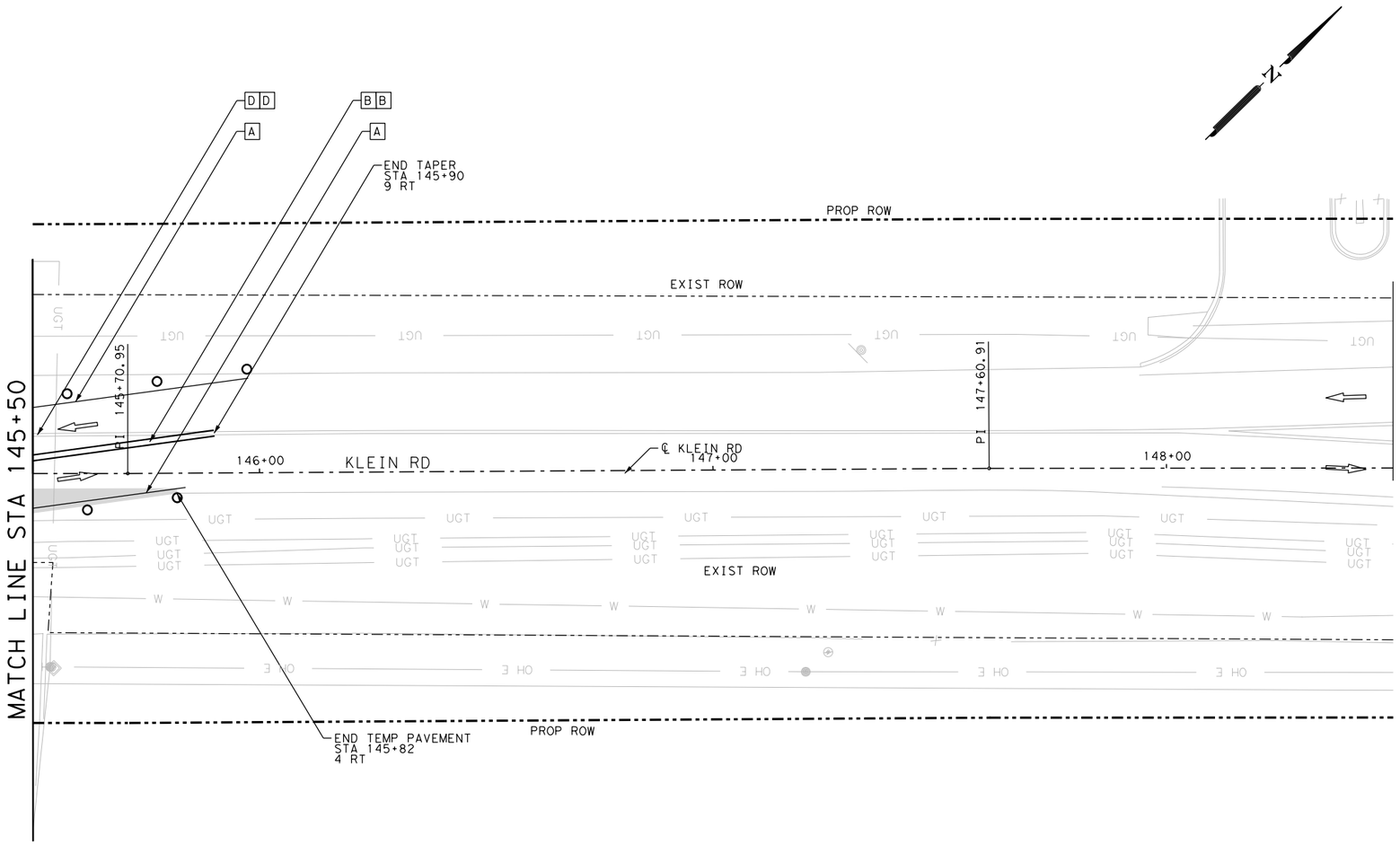

LEGEND

- SIGN
- TYPE III BARRICADE
- TRAFFIC FLOW ARROWS
- TEMPORARY PAVEMENT
- CONSTRUCTION PHASE
- PLASTIC DRUM
- LOW PROFILE CONCRETE BARRIER TYPE 1 AND TYPE 2

A	NON-REMOV (W)4"(SLD)	G	ELIM (8")
B	NON-REMOV (Y)4"(SLD)	H	ELIM (24")
C	NON-REMOV (W)24"(SLD)	I	ELIM (MED NOSE)
D	ELIM (4")	J	REMOV (W)4"(SLD)
E	ELIM (ARROW)	K	REMOV (Y)4"(SLD)
F	ELIM (WORD)	L	REMOV (W)8"(SLD)

DESIGN

INTERIM REVIEW

DOCUMENT INCOMPLETE. NOT INTENDED FOR PERMIT, BIDDING OR CONSTRUCTION.
ENGINEER: JAKE BOEKAMP
P.E. SERIAL NO: 129661
DATE: 1/9/2020

APPROVAL

INTERIM REVIEW

DOCUMENT INCOMPLETE. NOT INTENDED FOR PERMIT, BIDDING OR CONSTRUCTION.
ENGINEER: JOHN A. TYLER
P.E. SERIAL NO: 105193
DATE: 1/9/2020

0 10 20 30 60

SCALE: PLAN 1"= 30'

REV. NO.	DATE	DESCRIPTION	BY

PAPE-DAWSON ENGINEERS
SAN ANTONIO | AUSTIN | HOUSTON | FORT WORTH | DALLAS
2000 NW LOOP 410 | SAN ANTONIO, TX 78213 | 210.375.9000
TBPE FIRM REGISTRATION #470 | TBPLS FIRM REGISTRATION #10028800

City of New Braunfels

KLEIN RD PHASE 2

TRAFFIC CONTROL PLAN PHASE 1 STEP 2

SHEET 3 OF 4

DGN:	STATE	PROJECT NO.	ROADWAY
CHK DGN:	TEXAS	NB 18-026	KLEIN RD
DWG:	COUNTY	CITY	SHEET NO.
CHK DWG:	GUADALUPE	NEW BRAUNFELS	49

Plotted on: 1/9/2020

Design Filename: H:\Projects\510\30\03\Design\Civil\TCP\Phase1\5103003tcp1A03.dgn

Plotted on: 1/9/2020

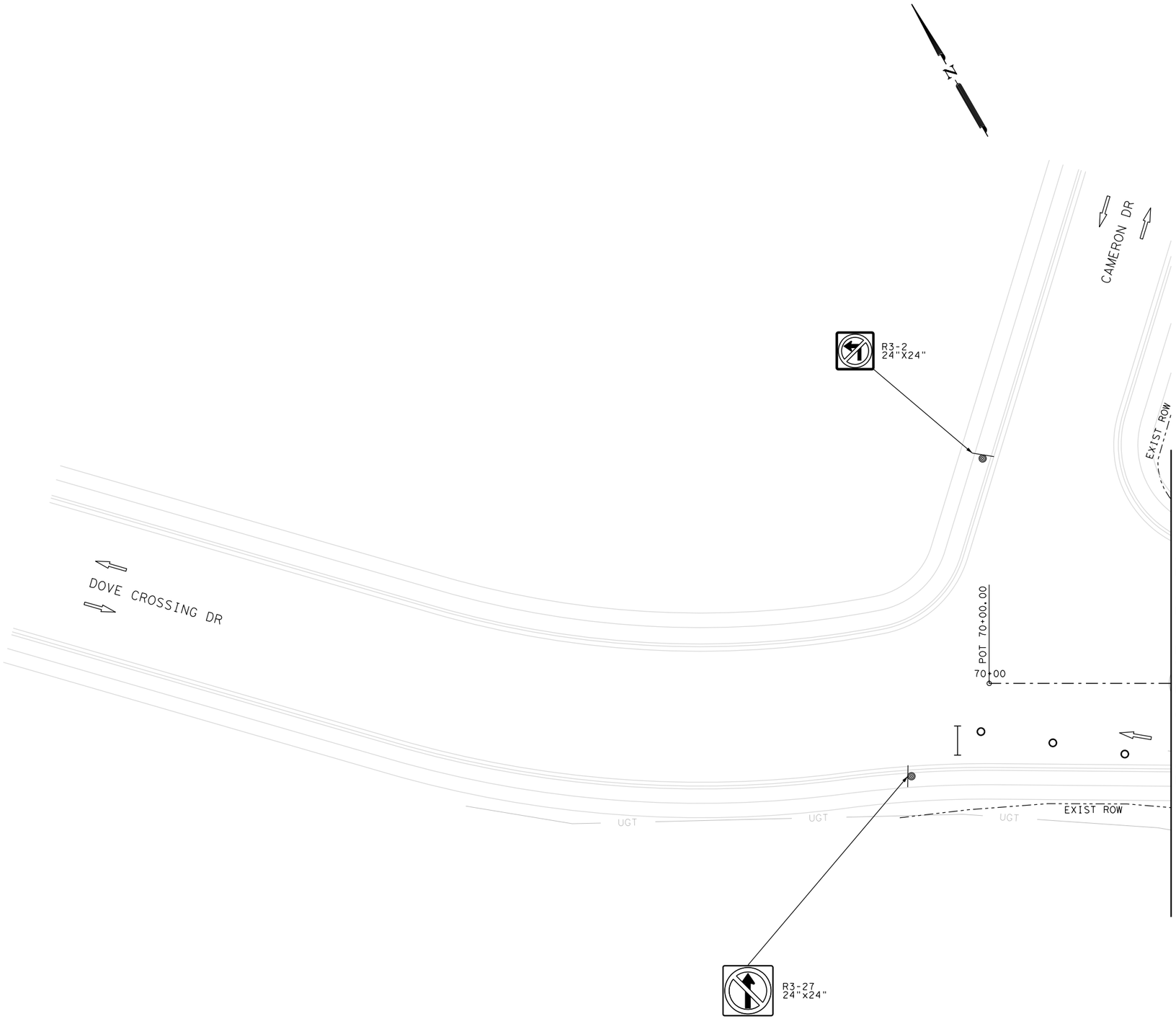

LEGEND

- SIGN
- TYPE III BARRICADE
- TRAFFIC FLOW ARROWS
- TEMPORARY PAVEMENT
- CONSTRUCTION PHASE
- PLASTIC DRUM
- LOW PROFILE CONCRETE BARRIER TYPE 1 AND TYPE 2

A	NON-REMOV (W)4"(SLD)	G	ELIM (8")
B	NON-REMOV (Y)4"(SLD)	H	ELIM (24")
C	NON-REMOV (W)24"(SLD)	I	ELIM (MED NOSE)
D	ELIM (4")	J	REMOV (W)4"(SLD)
E	ELIM (ARROW)	K	REMOV (Y)4"(SLD)
F	ELIM (WORD)	L	REMOV (W)8"(SLD)

DESIGN

INTERIM REVIEW
DOCUMENT INCOMPLETE. NOT INTENDED FOR PERMIT, BIDDING OR CONSTRUCTION.
ENGINEER: JAKE BOEKAMP
P.E. SERIAL NO: 129661
DATE: 1/9/2020

APPROVAL

INTERIM REVIEW
DOCUMENT INCOMPLETE. NOT INTENDED FOR PERMIT, BIDDING OR CONSTRUCTION.
ENGINEER: JOHN A. TYLER
P.E. SERIAL NO: 105193
DATE: 1/9/2020

0 10 20 30 60

SCALE: PLAN 1"= 30'

REV. NO.	DATE	DESCRIPTION	BY

PAPE-DAWSON ENGINEERS
SAN ANTONIO | AUSTIN | HOUSTON | FORT WORTH | DALLAS
2000 NW LOOP 410 | SAN ANTONIO, TX 78213 | 210.375.9000
TBPE FIRM REGISTRATION #470 | TBPLS FIRM REGISTRATION #10028800

City of New Braunfels

KLEIN RD PHASE 2

TRAFFIC CONTROL PLAN PHASE 1 STEP 2

SHEET 4 OF 4

DGN:	STATE	PROJECT NO.	ROADWAY
CHK DGN:	TEXAS	NB 18-026	KLEIN RD
DWG:	COUNTY	CITY	SHEET NO.
CHK DWG:	GUADALUPE	NEW BRAUNFELS	50

Design Filename: H:\Projects\510\30\03\Design\Civil\TCP\Phase1\5103003tcp1A04.dgn

Plotted on: 1/9/2020

Design Filename: H:\Projects\510\30\03\Design\Civil\TCP\PhaseII\5103003tcp201.dgn

ITEM	DESCRIPTION	UNIT	QTY
0662-6063	WK ZN PAV MRK REMOV (W)4"(SLD)	LF	47
0662-6095	WK ZN PAV MRK REMOV (Y)4"(SLD)	LF	150
0677-6001	ELIM EXT PAV MRK & MRKS (4")	LF	10

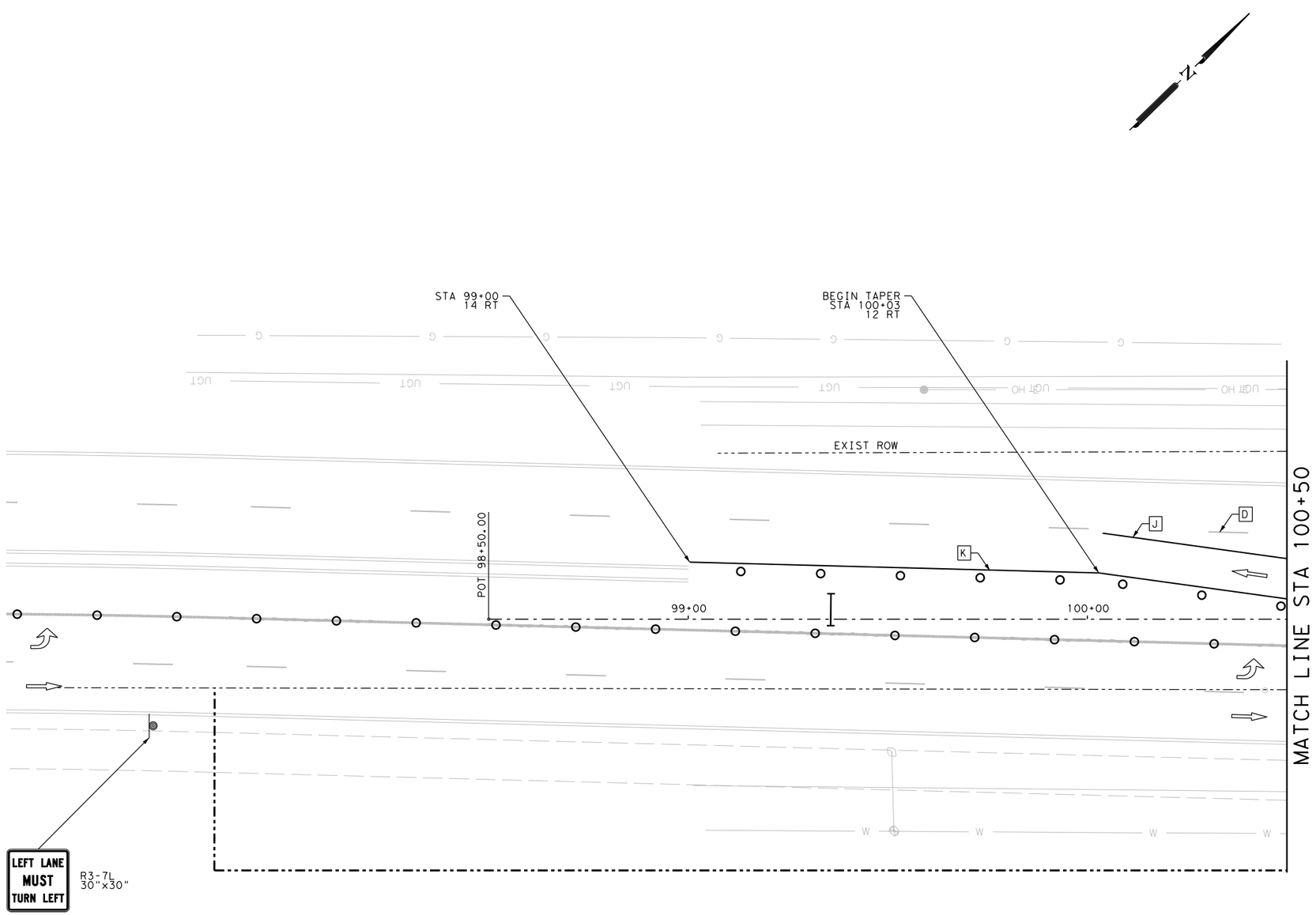

LEGEND

- SIGN
- TYPE III BARRICADE
- TRAFFIC FLOW ARROWS
- TEMPORARY PAVEMENT
- CONSTRUCTION PHASE
- PLASTIC DRUM
- LOW PROFILE CONCRETE BARRIER TYPE 1 AND TYPE 2

A	NON-REMOV (W)4"(SLD)	G	ELIM (8")
B	NON-REMOV (Y)4"(SLD)	H	ELIM (24")
C	NON-REMOV (W)24"(SLD)	I	ELIM (MED NOSE)
D	ELIM (4")	J	REMOV (W)4"(SLD)
E	ELIM (ARROW)	K	REMOV (Y)4"(SLD)
F	ELIM (WORD)	L	REMOV (W)8"(SLD)

DESIGN

INTERIM REVIEW
DOCUMENT INCOMPLETE. NOT INTENDED FOR PERMIT, BIDDING OR CONSTRUCTION.
ENGINEER: JAKE BOEKAMP
P.E. SERIAL NO: 129661
DATE: 1/9/2020

APPROVAL

INTERIM REVIEW
DOCUMENT INCOMPLETE. NOT INTENDED FOR PERMIT, BIDDING OR CONSTRUCTION.
ENGINEER: JOHN A. TYLER
P.E. SERIAL NO: 105193
DATE: 1/9/2020

0 10 20 30 60

SCALE: PLAN 1"= 30'

REV. NO.	DATE	DESCRIPTION	BY

PAPE-DAWSON ENGINEERS
SAN ANTONIO | AUSTIN | HOUSTON | FORT WORTH | DALLAS
2000 NW LOOP 410 | SAN ANTONIO, TX 78213 | 210.375.9000
TBPE FIRM REGISTRATION #470 | TBPLS FIRM REGISTRATION #10028800

City of New Braunfels

NOTES:

1. FOR ADDITIONAL DETAILS SEE TxDOT TCP STANDARD SHEETS.
2. EXISTING FEATURES ARE SHOWN SCREENED BACK.
3. EXISTING PAVEMENT MARKINGS CONFLICTING WITH WORK ZONE PAVEMENT MARKINGS SHALL BE REMOVED.
4. MAINTAIN 30' TURNING RADII AT INTERSECTION DURING CONSTRUCTION.
5. ACCESS TO ADJOINING PROPERTIES MUST BE MAINTAINED AT ALL TIMES.
6. SEE TxDOT BARRICADE AND CONSTUCTION CHANNELIZING DEVICES STANDARDS BC (9) 14 FOR BARREL SPACING.

KLEIN RD PHASE 2

TRAFFIC CONTROL PLAN PHASE 2 STEP 1

SHEET 1 OF 19

DGN:	STATE	PROJECT NO.	ROADWAY
CHK DGN:	TEXAS	NB 18-026	KLEIN RD
DWG:	COUNTY	CITY	SHEET NO.
CHK DWG:	GUADALUPE	NEW BRAUNFELS	51

Plotted on: 1/9/2020

Design Filename: H:\Projects\510\30\03\Design\Civil\TCP\Phase1\5103003tcp202.dgn

ITEM	DESCRIPTION	UNIT	QTY
0662-6004	WK ZN PAV MRK NON-REMOV (W)4"(SLD)	LF	118
0662-6034	WK ZN PAV MRK NON-REMOV (Y)4"(SLD)	LF	236
0662-6063	WK ZN PAV MRK REMOV (W)4"(SLD)	LF	105
0662-6095	WK ZN PAV MRK REMOV (Y)4"(SLD)	LF	105
0677-6001	ELIM EXT PAV MRK & MRKS (4")	LF	80
0677-6003	ELIM EXT PAV MRK & MRKS (8")	LF	83
0677-6007	ELIM EXT PAV MRK & MRKS (24")	LF	64
0677-6008	ELIM EXT PAV MRK & MRKS (ARROW)	EA	1
0677-6012	ELIM EXT PAV MRK & MRKS (WORD)	EA	1
0677-6020	ELIM EXT PAV MRK & MRKS (MED NOSE)	EA	1

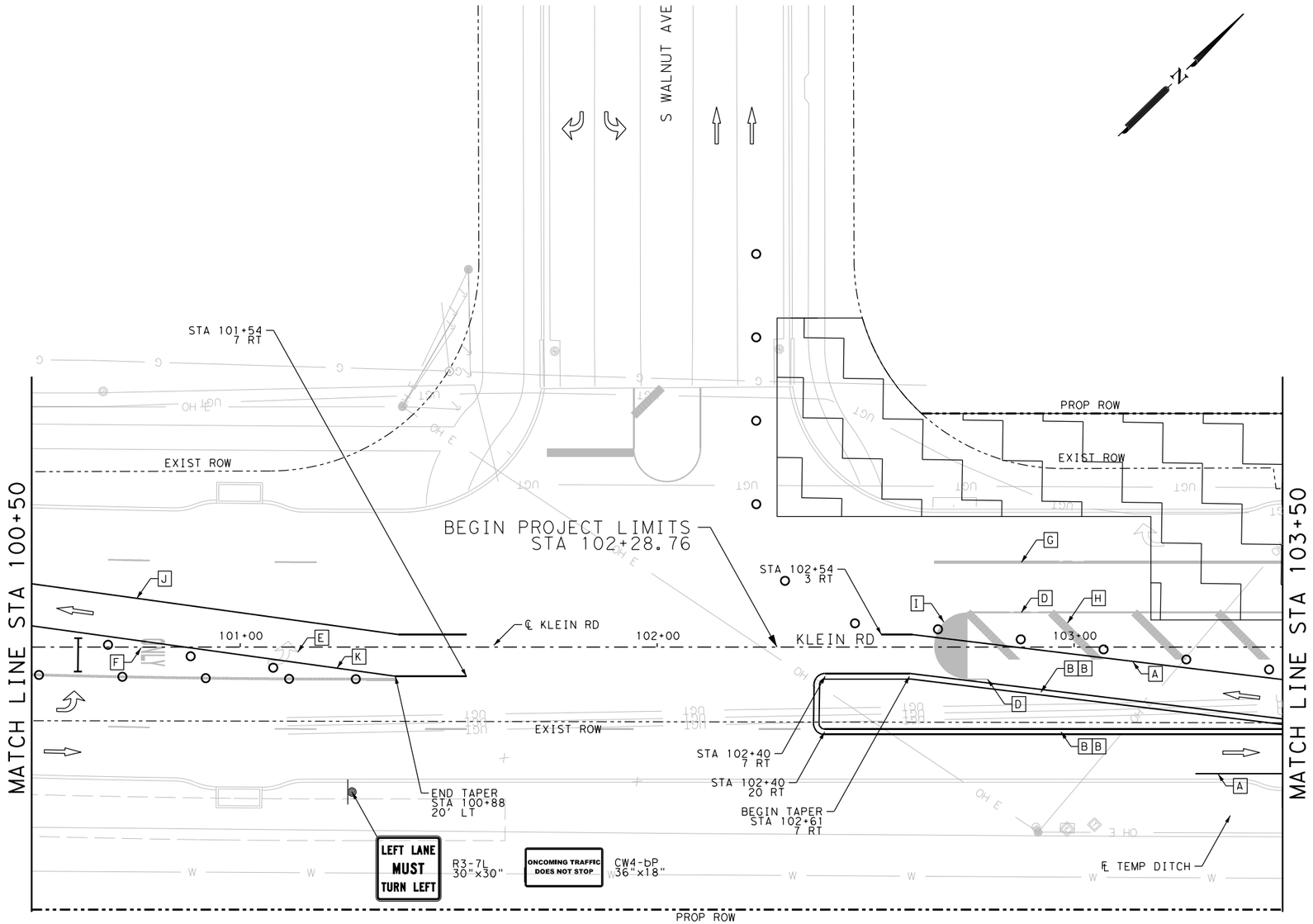

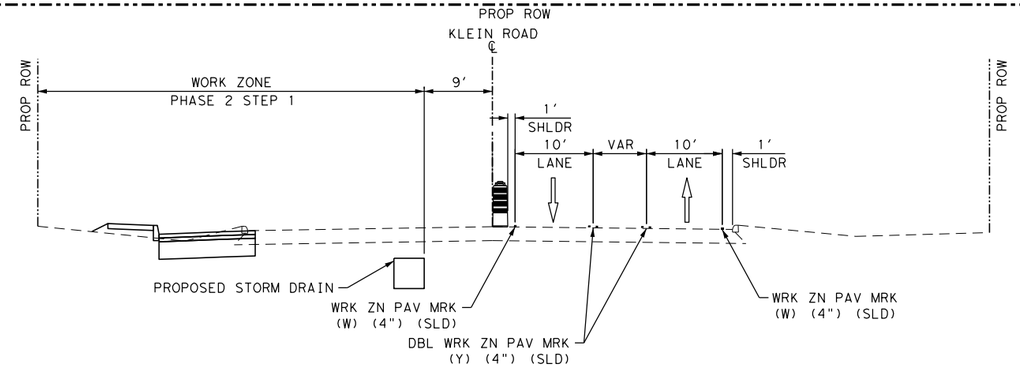

PHASE 2 STEP 1

N.T.S.
102+30 TO 104+70

LEGEND

- SIGN
- TYPE III BARRICADE
- TRAFFIC FLOW ARROWS
- TEMPORARY PAVEMENT
- CONSTRUCTION PHASE
- PLASTIC DRUM
- LOW PROFILE CONCRETE BARRIER TYPE 1 AND TYPE 2

A	NON-REMOV (W)4"(SLD)	G	ELIM (8")
B	NON-REMOV (Y)4"(SLD)	H	ELIM (24")
C	NON-REMOV (W)24"(SLD)	I	ELIM (MED NOSE)
D	ELIM (4")	J	REMOV (W)4"(SLD)
E	ELIM (ARROW)	K	REMOV (Y)4"(SLD)
F	ELIM (WORD)	L	REMOV (W)8"(SLD)

DESIGN

INTERIM REVIEW

DOCUMENT INCOMPLETE. NOT INTENDED FOR PERMIT, BIDDING OR CONSTRUCTION.
ENGINEER: JAKE BOEKAMP
P.E. SERIAL NO: 129661
DATE: 1/9/2020

APPROVAL

INTERIM REVIEW

DOCUMENT INCOMPLETE. NOT INTENDED FOR PERMIT, BIDDING OR CONSTRUCTION.
ENGINEER: JOHN A. TYLER
P.E. SERIAL NO: 105193
DATE: 1/9/2020

0 10 20 30 60

SCALE: PLAN 1"= 30'

REV. NO.	DATE	DESCRIPTION	BY

PAPE-DAWSON ENGINEERS
SAN ANTONIO | AUSTIN | HOUSTON | FORT WORTH | DALLAS
2000 NW LOOP 410 | SAN ANTONIO, TX 78213 | 210.375.9000
TBPE FIRM REGISTRATION #470 | TBPLS FIRM REGISTRATION #10028800

City of New Braunfels

KLEIN RD PHASE 2

TRAFFIC CONTROL PLAN PHASE 2 STEP 1

SHEET 2 OF 19

DGN:	STATE	PROJECT NO.	ROADWAY
CHK DGN:	TEXAS	NB 18-026	KLEIN RD
DWG:	COUNTY	CITY	SHEET NO.
CHK DWG:	GUADALUPE	NEW BRAUNFELS	52

Plotted on: 1/9/2020

Design Filename: H:\Projects\510\30\03\Design\Civil\TCP\PhaseII\5103003tcp203.dgn

ITEM	DESCRIPTION	UNIT	QTY
0508-6001	CONSTRUCTING DETOURS	SY	202
0512-6033	PORT CTB (MOVE)(LOW PROF)(TY 1)	LF	188
0512-6034	PORT CTB (MOVE)(LOW PROF)(TY 2)	LF	20
0512-6057	PORT CTB (REMOVE)(LOW PROF)(TY 1)	LF	188
0512-6058	PORT CTB (REMOVE)(LOW PROF)(TY 2)	LF	20
0662-6004	WK ZN PAV MRK NON-REMOV (W)4"(SLD)	LF	600
0662-6034	WK ZN PAV MRK NON-REMOV (Y)4"(SLD)	LF	320
0677-6001	ELIM EXT PAV MRK & MRKS (4")	LF	20

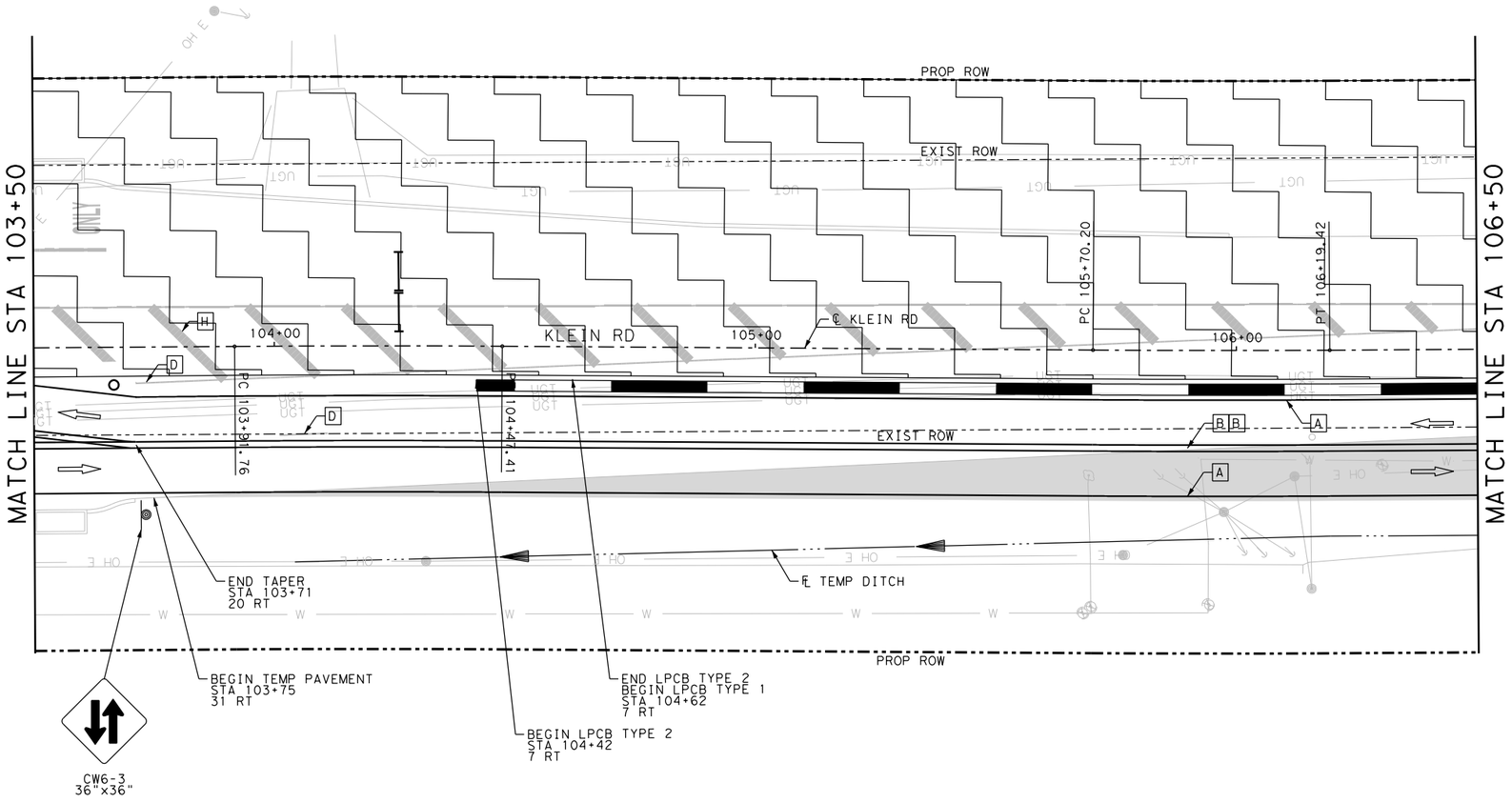

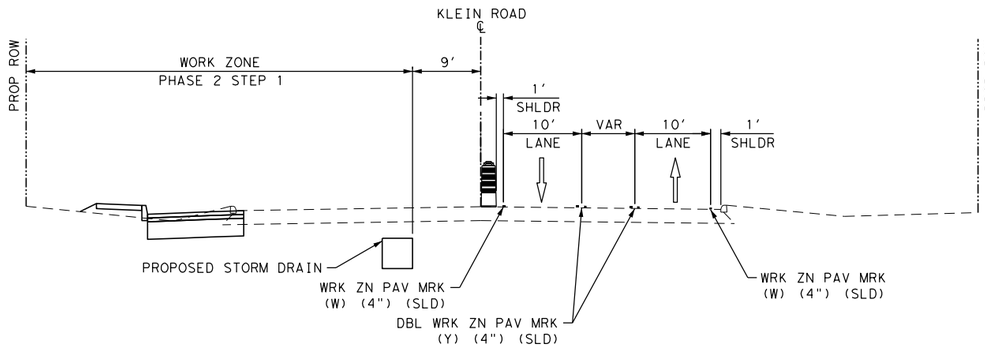

PHASE 2 STEP 1

N.T.S.

102+30 TO 104+70

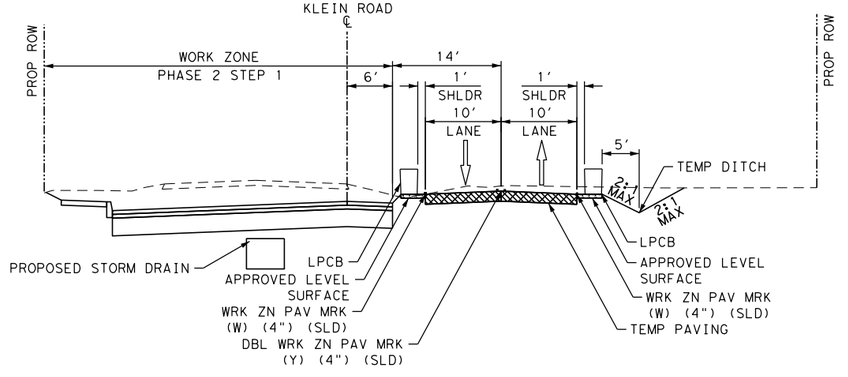

PHASE 2 STEP 1

N.T.S.

104+70 TO 119+32

LEGEND

- SIGN
- TYPE III BARRICADE
- TRAFFIC FLOW ARROWS
- TEMPORARY PAVEMENT
- CONSTRUCTION PHASE
- PLASTIC DRUM
- LOW PROFILE CONCRETE BARRIER TYPE 1 AND TYPE 2

A	NON-REMOV (W)4"(SLD)	G	ELIM (8")
B	NON-REMOV (Y)4"(SLD)	H	ELIM (24")
C	NON-REMOV (W)24"(SLD)	I	ELIM (MED NOSE)
D	ELIM (4")	J	REMOV (W)4"(SLD)
E	ELIM (ARROW)	K	REMOV (Y)4"(SLD)
F	ELIM (WORD)	L	REMOV (W)8"(SLD)

DESIGN

INTERIM REVIEW

DOCUMENT INCOMPLETE. NOT INTENDED FOR PERMIT, BIDDING OR CONSTRUCTION.
ENGINEER: JAKE BOEKAMP
P.E. SERIAL NO: 129661
DATE: 1/9/2020

APPROVAL

INTERIM REVIEW

DOCUMENT INCOMPLETE. NOT INTENDED FOR PERMIT, BIDDING OR CONSTRUCTION.
ENGINEER: JOHN A. TYLER
P.E. SERIAL NO: 105193
DATE: 1/9/2020

0 10 20 30 60

SCALE: PLAN 1"= 30′

REV. NO.	DATE	DESCRIPTION	BY

PAPE-DAWSON ENGINEERS
SAN ANTONIO | AUSTIN | HOUSTON | FORT WORTH | DALLAS
2000 NW LOOP 410 | SAN ANTONIO, TX 78213 | 210.375.9000
TBPE FIRM REGISTRATION #470 | TBPLS FIRM REGISTRATION #10028800

City of New Braunfels

KLEIN RD PHASE 2

TRAFFIC CONTROL PLAN PHASE 2 STEP 1

SHEET 3 OF 19

DGN:	STATE	PROJECT NO.	ROADWAY
CHK DGN:	TEXAS	NB 18-026	KLEIN RD
DWG:	COUNTY	CITY	SHEET NO.
CHK DWG:	GUADALUPE	NEW BRAUNFELS	53

ITEM	DESCRIPTION	UNIT	QTY
0508-6001	CONSTRUCTING DETOURS	SY	606
0512-6009	PORT CTB (FUR & INST)(LOW PROF)(TY 1)	LF	103
0512-6010	PORT CTB (FUR & INST)(LOW PROF)(TY 2)	LF	40
0512-6033	PORT CTB (MOVE)(LOW PROF)(TY 1)	LF	272
0512-6034	PORT CTB (MOVE)(LOW PROF)(TY 2)	LF	20
0512-6057	PORT CTB (REMOVE)(LOW PROF)(TY 1)	LF	375
0512-6058	PORT CTB (REMOVE)(LOW PROF)(TY 2)	LF	60
0662-6004	WK ZN PAV MRK NON-REMOV (W)4"(SLD)	LF	600
0662-6034	WK ZN PAV MRK NON-REMOV (Y)4"(SLD)	LF	600

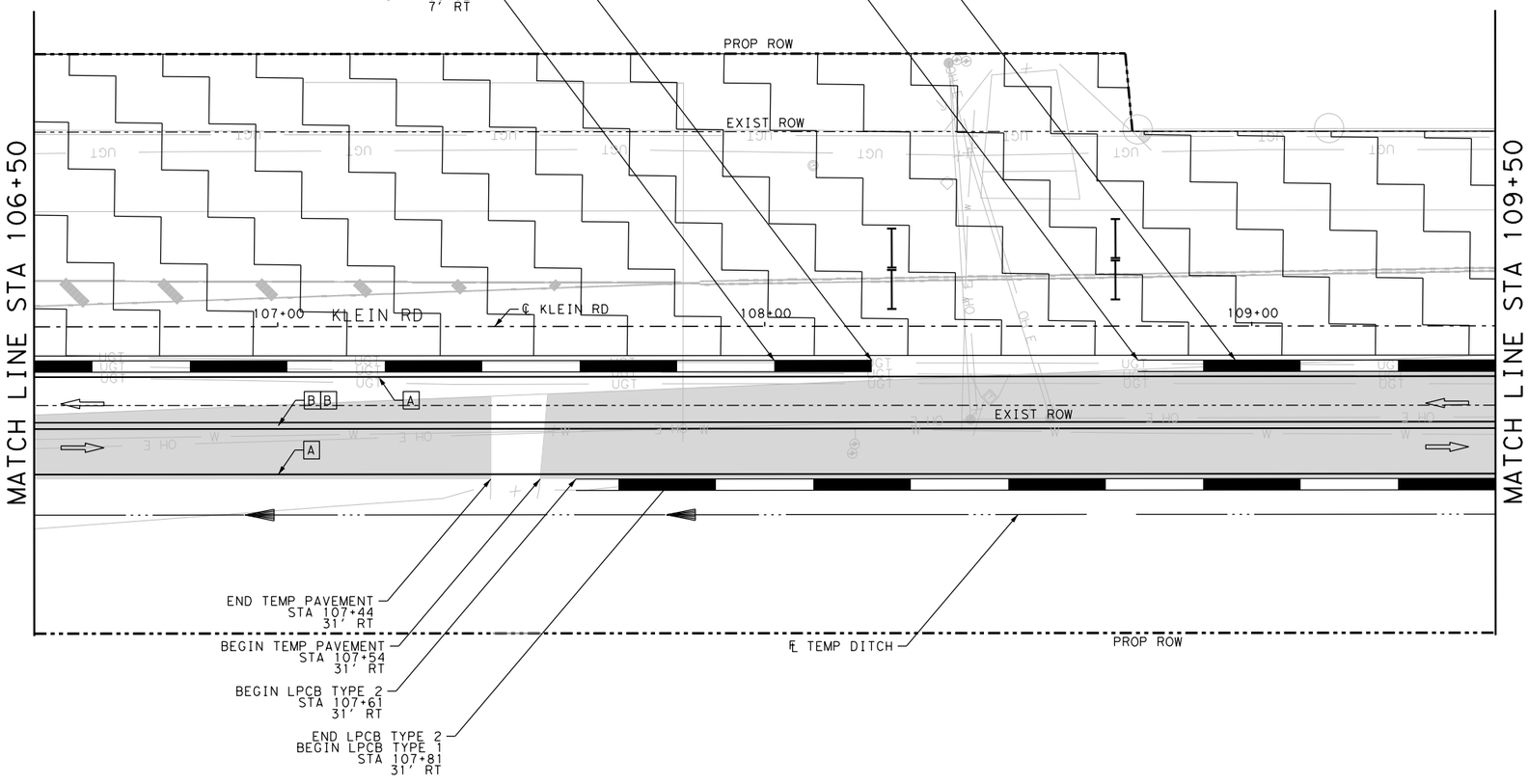

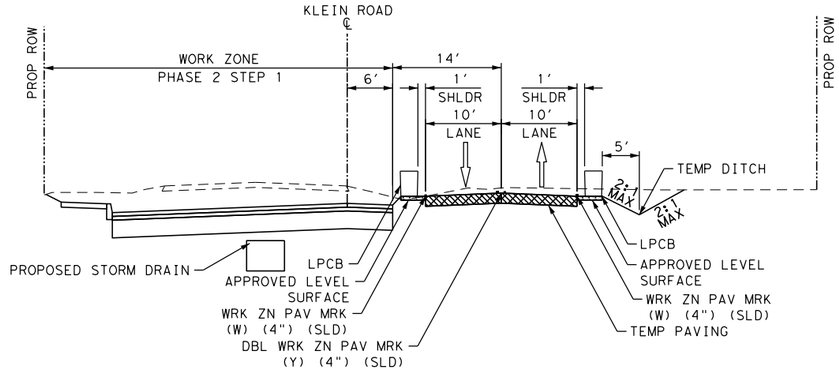

PHASE 2 STEP 1

N.T.S.
104+70 TO 119+32

LEGEND

- SIGN
- TYPE III BARRICADE
- TRAFFIC FLOW ARROWS
- TEMPORARY PAVEMENT
- CONSTRUCTION PHASE
- PLASTIC DRUM
- LOW PROFILE CONCRETE BARRIER TYPE 1 AND TYPE 2

A	NON-REMOV (W)4"(SLD)	G	ELIM (8")
B	NON-REMOV (Y)4"(SLD)	H	ELIM (24")
C	NON-REMOV (W)24"(SLD)	I	ELIM (MED NOSE)
D	ELIM (4")	J	REMOV (W)4"(SLD)
E	ELIM (ARROW)	K	REMOV (Y)4"(SLD)
F	ELIM (WORD)	L	REMOV (W)8"(SLD)

DESIGN

INTERIM REVIEW

DOCUMENT INCOMPLETE. NOT INTENDED FOR PERMIT, BIDDING OR CONSTRUCTION.
ENGINEER: JAKE BOEKAMP
P.E. SERIAL NO: 129661
DATE: 1/9/2020

APPROVAL

INTERIM REVIEW

DOCUMENT INCOMPLETE. NOT INTENDED FOR PERMIT, BIDDING OR CONSTRUCTION.
ENGINEER: JOHN A. TYLER
P.E. SERIAL NO: 105193
DATE: 1/9/2020

0 10 20 30 60

SCALE: PLAN 1"= 30'

REV. NO.	DATE	DESCRIPTION	BY

PAPE-DAWSON ENGINEERS
SAN ANTONIO | AUSTIN | HOUSTON | FORT WORTH | DALLAS
2000 NW LOOP 410 | SAN ANTONIO, TX 78213 | 210.375.9000
TBPE FIRM REGISTRATION #470 | TBPLS FIRM REGISTRATION #10028800

City of New Braunfels

KLEIN RD PHASE 2

TRAFFIC CONTROL PLAN PHASE 2 STEP 1

SHEET 4 OF 19

DGN:	STATE	PROJECT NO.	ROADWAY
CHK DGN:	TEXAS	NB 18-026	KLEIN RD
DWG:	COUNTY	CITY	SHEET NO.
CHK DWG:	GUADALUPE	NEW BRAUNFELS	54

Plotted on: 1/9/2020

Design Filename: H:\Projects\510\30\03\Design\Civil\TCP\PhaseII\5103003tcp204.dgn

ITEM	DESCRIPTION	UNIT	QTY
0508-6001	CONSTRUCTING DETOURS	SY	696
0512-6009	PORT CTB (FUR & INST)(LOW PROF)(TY 1)	LF	536
0512-6010	PORT CTB (FUR & INST)(LOW PROF)(TY 2)	LF	40
0512-6057	PORT CTB (REMOVE)(LOW PROF)(TY 1)	LF	536
0512-6058	PORT CTB (REMOVE)(LOW PROF)(TY 2)	LF	40
0662-6004	WK ZN PAV MRK NON-REMOV (W)4"(SLD)	LF	600
0662-6034	WK ZN PAV MRK NON-REMOV (Y)4"(SLD)	LF	600

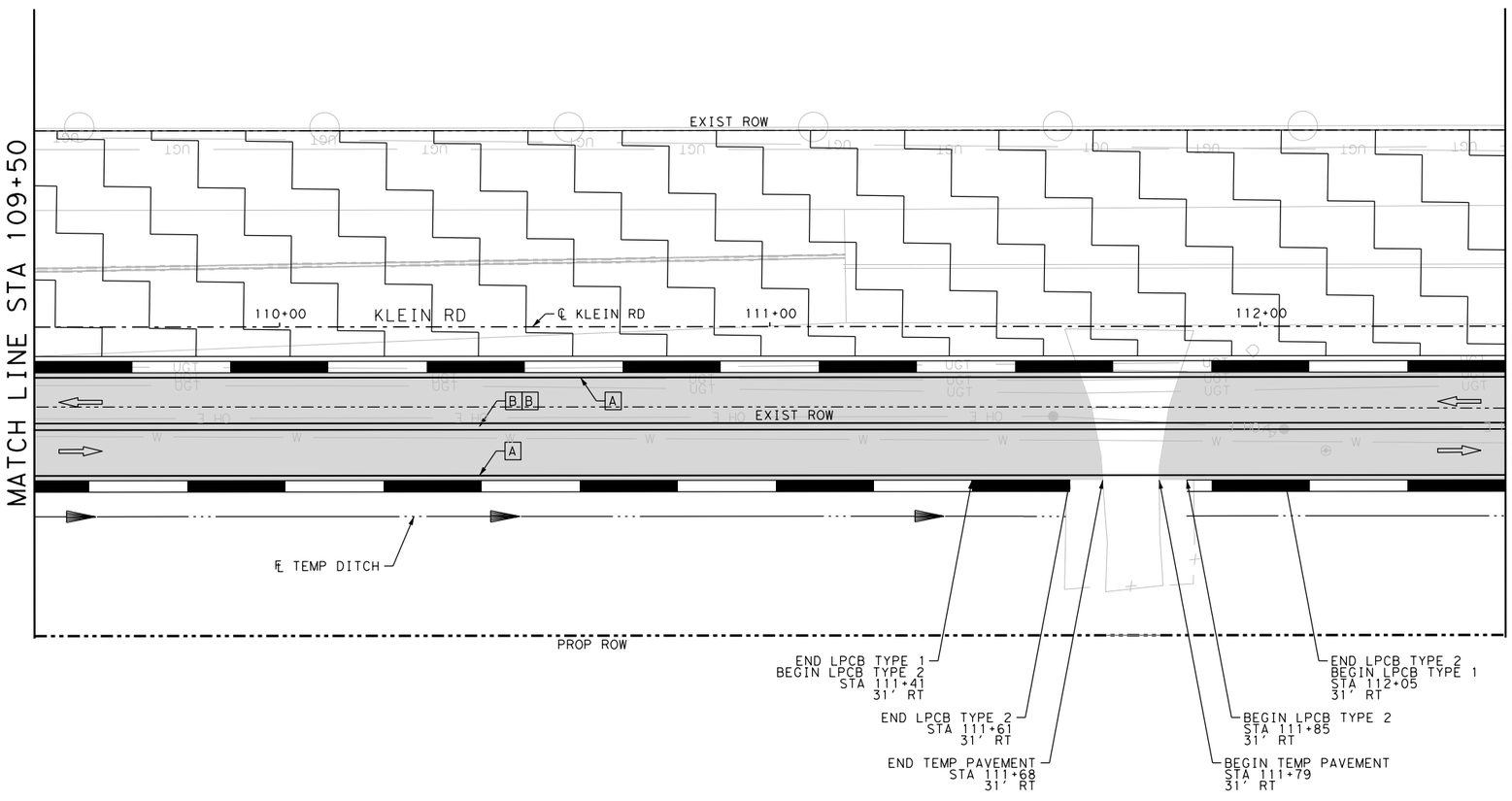

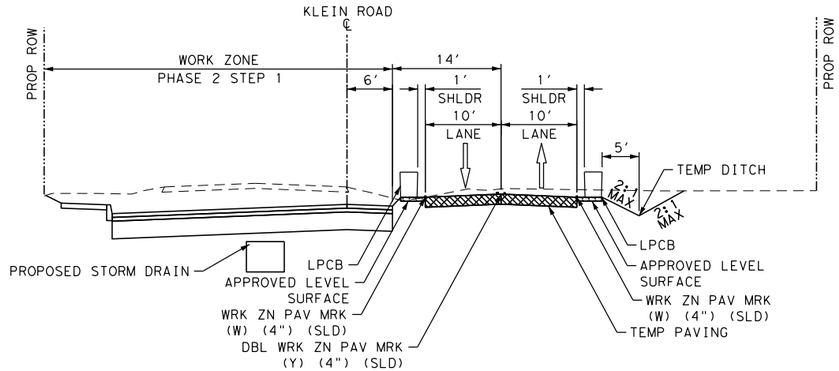

PHASE 2 STEP 1

N.T.S.
104+70 TO 119+32

LEGEND

- SIGN
- TYPE III BARRICADE
- TRAFFIC FLOW ARROWS
- TEMPORARY PAVEMENT
- CONSTRUCTION PHASE
- PLASTIC DRUM
- LOW PROFILE CONCRETE BARRIER TYPE 1 AND TYPE 2

A	NON-REMOV (W)4"(SLD)	G	ELIM (8")
B	NON-REMOV (Y)4"(SLD)	H	ELIM (24")
C	NON-REMOV (W)24"(SLD)	I	ELIM (MED NOSE)
D	ELIM (4")	J	REMOV (W)4"(SLD)
E	ELIM (ARROW)	K	REMOV (Y)4"(SLD)
F	ELIM (WORD)	L	REMOV (W)8"(SLD)

DESIGN

INTERIM REVIEW
DOCUMENT INCOMPLETE. NOT INTENDED FOR PERMIT, BIDDING OR CONSTRUCTION.
ENGINEER: JAKE BOEKAMP
P.E. SERIAL NO: 129661
DATE: 1/9/2020

APPROVAL

INTERIM REVIEW
DOCUMENT INCOMPLETE. NOT INTENDED FOR PERMIT, BIDDING OR CONSTRUCTION.
ENGINEER: JOHN A. TYLER
P.E. SERIAL NO: 105193
DATE: 1/9/2020

0 10 20 30 60

SCALE: PLAN 1"= 30'

REV. NO.	DATE	DESCRIPTION	BY

PAPE-DAWSON ENGINEERS
SAN ANTONIO | AUSTIN | HOUSTON | FORT WORTH | DALLAS
2000 NW LOOP 410 | SAN ANTONIO, TX 78213 | 210.375.9000
TBPE FIRM REGISTRATION #470 | TBPLS FIRM REGISTRATION #10028800

City of New Braunfels

KLEIN RD PHASE 2

TRAFFIC CONTROL PLAN PHASE 2 STEP 1

SHEET 5 OF 19

DGN:	STATE	PROJECT NO.	ROADWAY
CHK DGN:	TEXAS	NB 18-026	KLEIN RD
DWG:	COUNTY	CITY	SHEET NO.
CHK DWG:	GUADALUPE	NEW BRAUNFELS	55

Plotted on: 1/9/2020

Design Filename: H:\Projects\510\30\03\Design\Civil\TCP\PhaseII\5103003tcp205.dgn

Plotted on: 1/9/2020

Design Filename: H:\Projects\510\30\03\Design\Civil\TCP\PhaseII\5103003tcp206.dgn

ITEM	DESCRIPTION	UNIT	QTY
0508-6001	CONSTRUCTING DETOURS	SY	733
0512-6009	PORT CTB (FUR & INST)(LOW PROF)(TY 1)	LF	392
0512-6010	PORT CTB (FUR & INST)(LOW PROF)(TY 2)	LF	80
0512-6057	PORT CTB (REMOVE)(LOW PROF)(TY 1)	LF	392
0512-6058	PORT CTB (REMOVE)(LOW PROF)(TY 2)	LF	80
0662-6004	WK ZN PAV MRK NON-REMOV (W)4"(SLD)	LF	524
0662-6034	WK ZN PAV MRK NON-REMOV (Y)4"(SLD)	LF	449

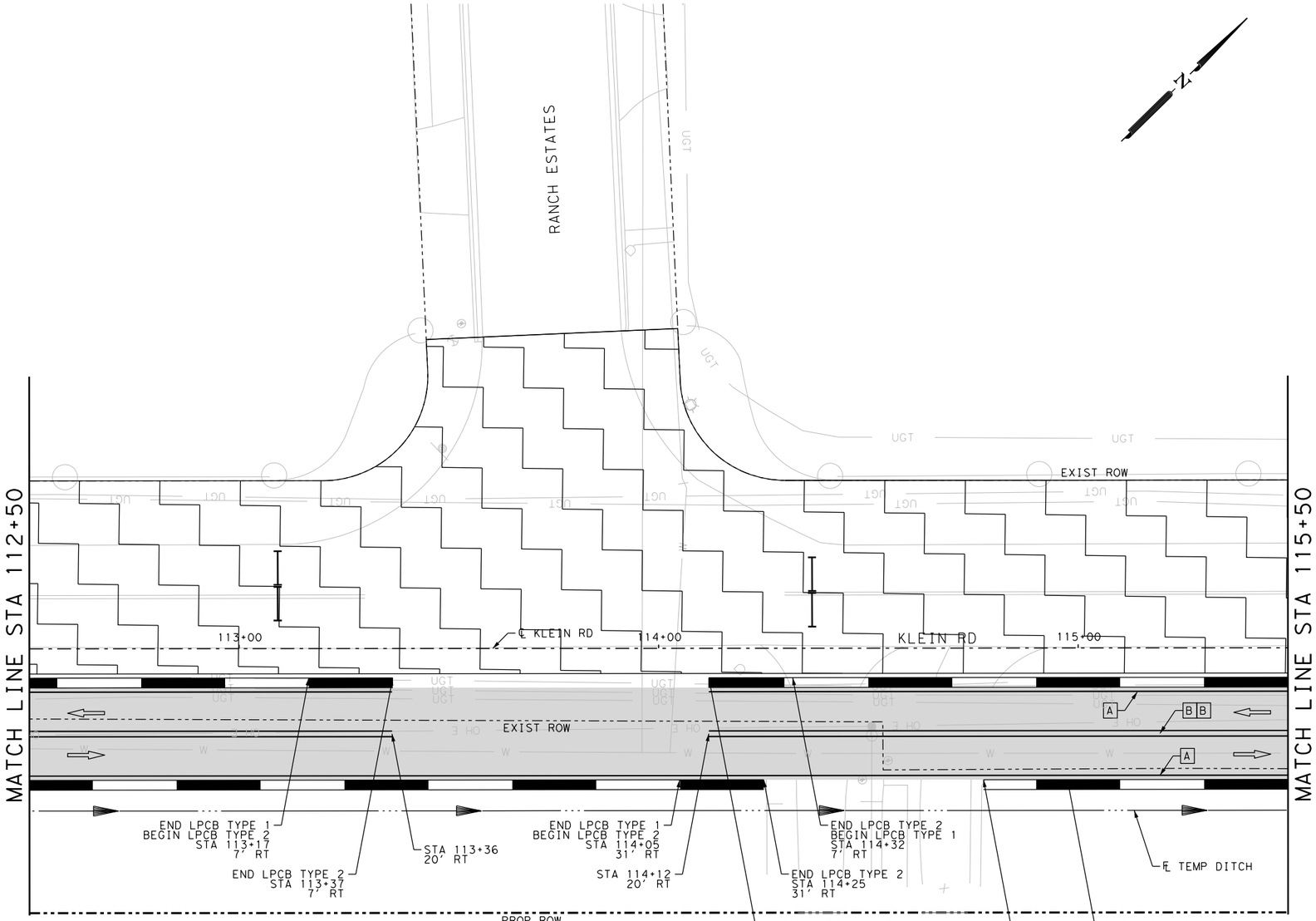

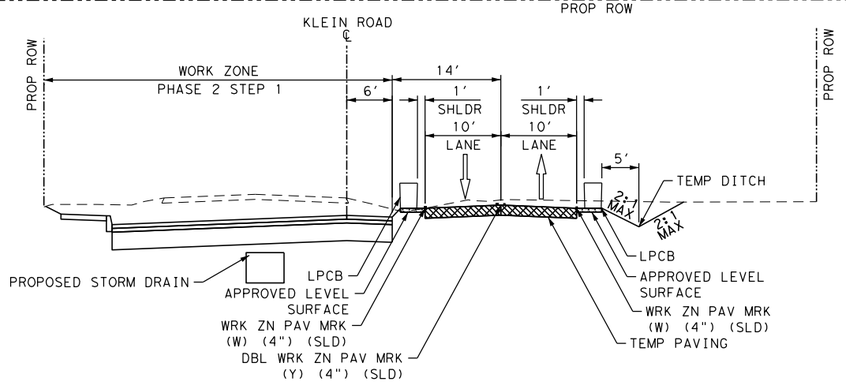

PHASE 2 STEP 1

N.T.S.
104+70 TO 119+32

LEGEND

- SIGN
- TYPE III BARRICADE
- TRAFFIC FLOW ARROWS
- TEMPORARY PAVEMENT
- CONSTRUCTION PHASE
- PLASTIC DRUM
- LOW PROFILE CONCRETE BARRIER TYPE 1 AND TYPE 2

A	NON-REMOV (W)4"(SLD)	G	ELIM (8")
B	NON-REMOV (Y)4"(SLD)	H	ELIM (24")
C	NON-REMOV (W)24"(SLD)	I	ELIM (MED NOSE)
D	ELIM (4")	J	REMOV (W)4"(SLD)
E	ELIM (ARROW)	K	REMOV (Y)4"(SLD)
F	ELIM (WORD)	L	REMOV (W)8"(SLD)

DESIGN

INTERIM REVIEW
DOCUMENT INCOMPLETE. NOT INTENDED FOR PERMIT, BIDDING OR CONSTRUCTION.
ENGINEER: JAKE BOEKAMP
P.E. SERIAL NO: 129661
DATE: 1/9/2020

APPROVAL

INTERIM REVIEW
DOCUMENT INCOMPLETE. NOT INTENDED FOR PERMIT, BIDDING OR CONSTRUCTION.
ENGINEER: JOHN A. TYLER
P.E. SERIAL NO: 105193
DATE: 1/9/2020

0 10 20 30 60

SCALE: PLAN 1"= 30'

REV. NO.	DATE	DESCRIPTION	BY

PAPE-DAWSON ENGINEERS
SAN ANTONIO | AUSTIN | HOUSTON | FORT WORTH | DALLAS
2000 NW LOOP 410 | SAN ANTONIO, TX 78213 | 210.375.9000
TBPE FIRM REGISTRATION #470 | TBPLS FIRM REGISTRATION #10028800

City of New Braunfels

KLEIN RD PHASE 2

TRAFFIC CONTROL PLAN PHASE 2 STEP 1

SHEET 6 OF 19

DGN:	STATE	PROJECT NO.	ROADWAY
CHK DGN:	TEXAS	NB 18-026	KLEIN RD
DWG:	COUNTY	CITY	SHEET NO.
CHK DWG:	GUADALUPE	NEW BRAUNFELS	56

Plotted on: 1/9/2020

Design Filename: H:\Projects\510\30\03\Design\Civil\TCP\Phase1\5103003tcp207.dgn

ITEM	DESCRIPTION	UNIT	QTY
0508-6001	CONSTRUCTING DETOURS	SY	696
0512-6009	PORT CTB (FUR & INST)(LOW PROF)(TY 1)	LF	534
0512-6010	PORT CTB (FUR & INST)(LOW PROF)(TY 2)	LF	40
0512-6057	PORT CTB (REMOVE)(LOW PROF)(TY 1)	LF	534
0512-6058	PORT CTB (REMOVE)(LOW PROF)(TY 2)	LF	40
0662-6004	WK ZN PAV MRK NON-REMOV (W)4"(SLD)	LF	600
0662-6034	WK ZN PAV MRK NON-REMOV (Y)4"(SLD)	LF	600

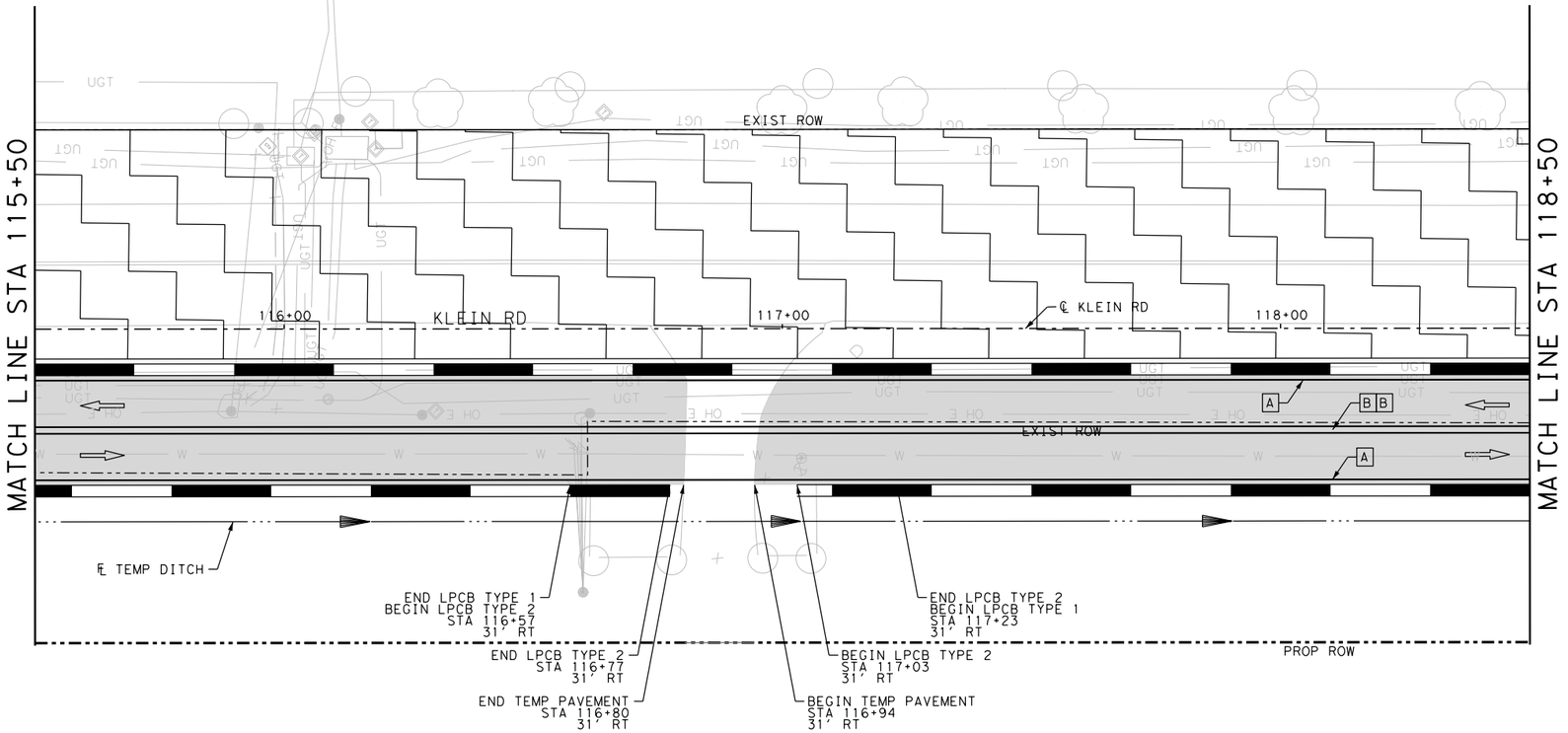

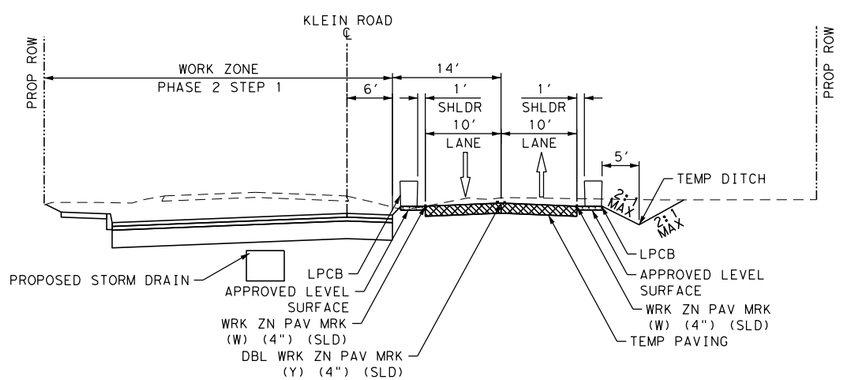

PHASE 2 STEP 1

N.T.S.
104+70 TO 119+32

LEGEND

- SIGN
- TYPE III BARRICADE
- TRAFFIC FLOW ARROWS
- TEMPORARY PAVEMENT
- CONSTRUCTION PHASE
- PLASTIC DRUM
- LOW PROFILE CONCRETE BARRIER TYPE 1 AND TYPE 2

A	NON-REMOV (W)4"(SLD)	G	ELIM (8")
B	NON-REMOV (Y)4"(SLD)	H	ELIM (24")
C	NON-REMOV (W)24"(SLD)	I	ELIM (MED NOSE)
D	ELIM (4")	J	REMOV (W)4"(SLD)
E	ELIM (ARROW)	K	REMOV (Y)4"(SLD)
F	ELIM (WORD)	L	REMOV (W)8"(SLD)

DESIGN

INTERIM REVIEW
DOCUMENT INCOMPLETE. NOT INTENDED FOR PERMIT, BIDDING OR CONSTRUCTION.
ENGINEER: JAKE BOEKAMP
P.E. SERIAL NO: 129661
DATE: 1/9/2020

APPROVAL

INTERIM REVIEW
DOCUMENT INCOMPLETE. NOT INTENDED FOR PERMIT, BIDDING OR CONSTRUCTION.
ENGINEER: JOHN A. TYLER
P.E. SERIAL NO: 105193
DATE: 1/9/2020

0 10 20 30 60

SCALE: PLAN 1"= 30'

REV. NO.	DATE	DESCRIPTION	BY

PAPE-DAWSON ENGINEERS
SAN ANTONIO | AUSTIN | HOUSTON | FORT WORTH | DALLAS
2000 NW LOOP 410 | SAN ANTONIO, TX 78213 | 210.375.9000
TBPE FIRM REGISTRATION #470 | TBPLS FIRM REGISTRATION #10028800

City of New Braunfels

KLEIN RD PHASE 2

TRAFFIC CONTROL PLAN PHASE 2 STEP 1

SHEET 7 OF 19

DGN:	STATE	PROJECT NO.	ROADWAY
CHK DGN:	TEXAS	NB 18-026	KLEIN RD
DWG:	COUNTY	CITY	SHEET NO.
CHK DWG:	GUADALUPE	NEW BRAUNFELS	57

Plotted on: 1/9/2020

Design Filename: H:\Projects\510\30\03\Design\Civil\TCP\Phase1\5103003tcp208.dgn

ITEM	DESCRIPTION	UNIT	QTY
0508-6001	CONSTRUCTING DETOURS	SY	736
0512-6009	PORT CTB (FUR & INST)(LOW PROF)(TY 1)	LF	433
0512-6010	PORT CTB (FUR & INST)(LOW PROF)(TY 2)	LF	80
0512-6057	PORT CTB (REMOVE)(LOW PROF)(TY 1)	LF	433
0512-6058	PORT CTB (REMOVE)(LOW PROF)(TY 2)	LF	80
0662-6004	WK ZN PAV MRK NON-REMOV (W)4"(SLD)	LF	536
0662-6034	WK ZN PAV MRK NON-REMOV (Y)4"(SLD)	LF	469

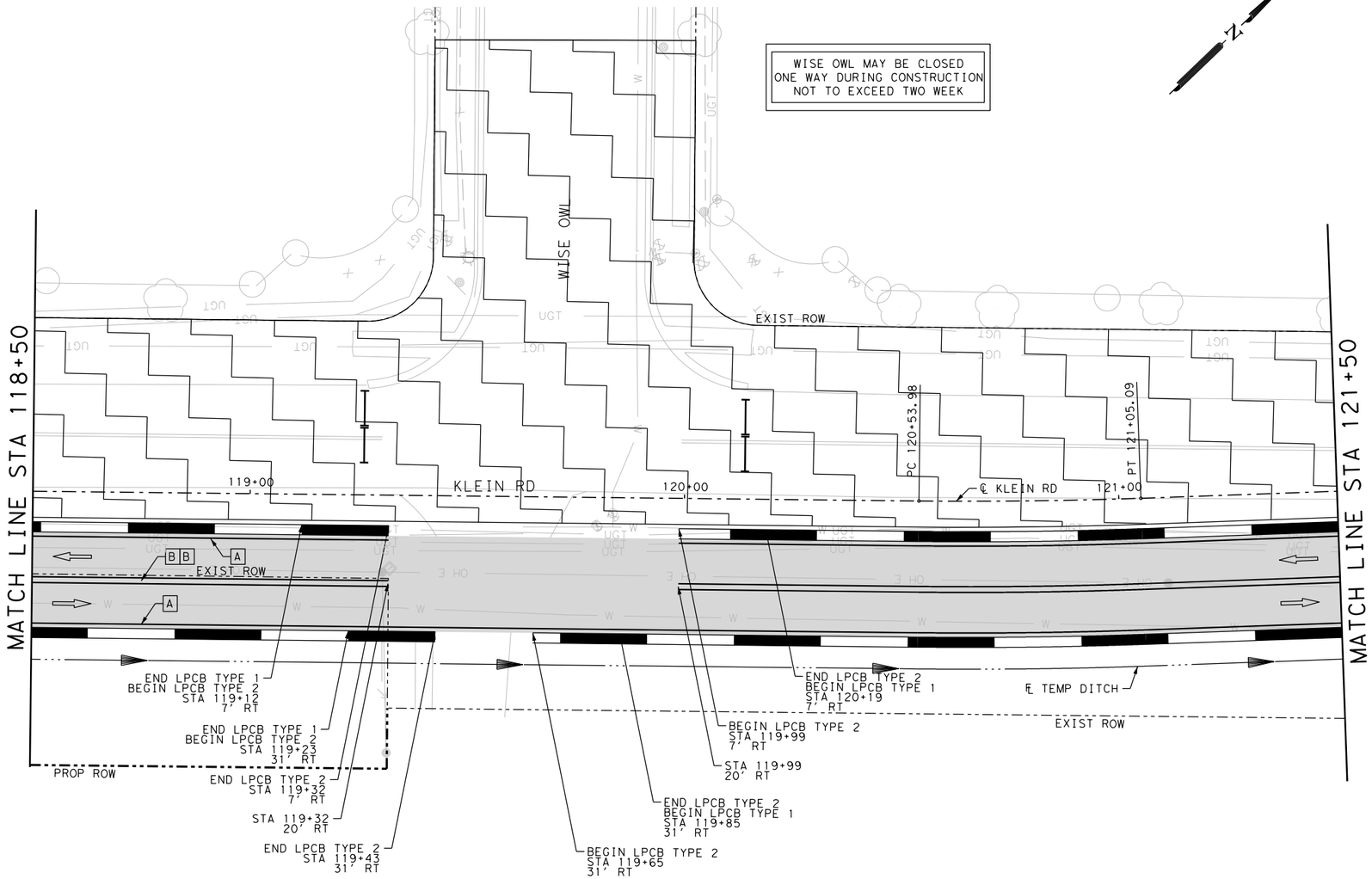

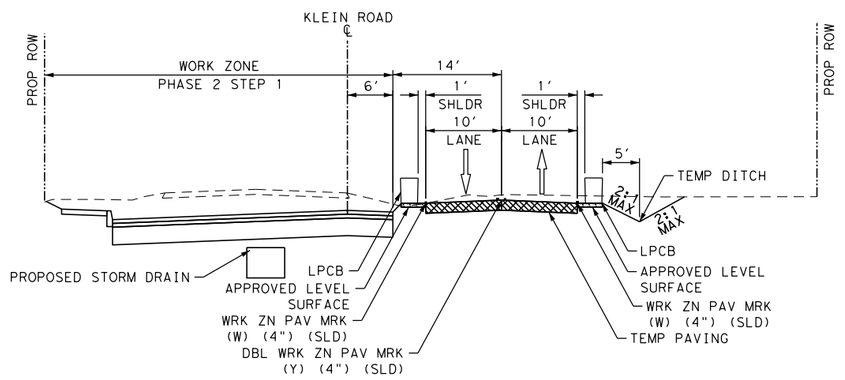

PHASE 2 STEP 1

N.T.S.
104+70 TO 119+32

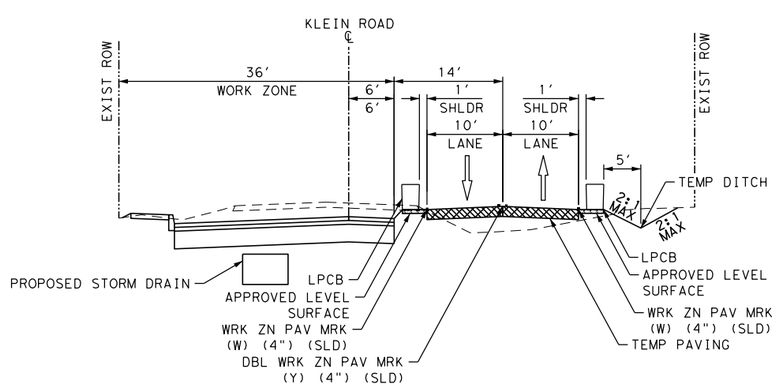

PHASE 2 STEP 1

N.T.S.
119+32 TO 133+65

LEGEND

- SIGN
- TYPE III BARRICADE
- TRAFFIC FLOW ARROWS
- TEMPORARY PAVEMENT
- CONSTRUCTION PHASE
- PLASTIC DRUM
- LOW PROFILE CONCRETE BARRIER TYPE 1 AND TYPE 2

A	NON-REMOV (W)4"(SLD)	G	ELIM (8")
B	NON-REMOV (Y)4"(SLD)	H	ELIM (24")
C	NON-REMOV (W)24"(SLD)	I	ELIM (MED NOSE)
D	ELIM (4")	J	REMOV (W)4"(SLD)
E	ELIM (ARROW)	K	REMOV (Y)4"(SLD)
F	ELIM (WORD)	L	REMOV (W)8"(SLD)

DESIGN

INTERIM REVIEW
DOCUMENT INCOMPLETE. NOT INTENDED FOR PERMIT, BIDDING OR CONSTRUCTION.
ENGINEER: JAKE BOEKAMP
P.E. SERIAL NO: 129661
DATE: 1/9/2020

APPROVAL

INTERIM REVIEW
DOCUMENT INCOMPLETE. NOT INTENDED FOR PERMIT, BIDDING OR CONSTRUCTION.
ENGINEER: JOHN A. TYLER
P.E. SERIAL NO: 105193
DATE: 1/9/2020

0 10 20 30 60

SCALE: PLAN 1"= 30'

REV. NO.	DATE	DESCRIPTION	BY

PAPE-DAWSON ENGINEERS
SAN ANTONIO | AUSTIN | HOUSTON | FORT WORTH | DALLAS
2000 NW LOOP 410 | SAN ANTONIO, TX 78213 | 210.375.9000
TBPE FIRM REGISTRATION #470 | TBPLS FIRM REGISTRATION #10028800

City of New Braunfels

KLEIN RD PHASE 2

TRAFFIC CONTROL PLAN PHASE 2 STEP 1

SHEET 8 OF 19

DGN:	STATE	PROJECT NO.	ROADWAY
CHK DGN:	TEXAS	NB 18-026	KLEIN RD
DWG:	COUNTY	CITY	SHEET NO.
CHK DWG:	GUADALUPE	NEW BRAUNFELS	58

ITEM	DESCRIPTION	UNIT	QTY
0508-6001	CONSTRUCTING DETOURS	SY	623
0512-6009	PORT CTB (FUR & INST)(LOW PROF)(TY 1)	LF	463
0512-6010	PORT CTB (FUR & INST)(LOW PROF)(TY 2)	LF	60
0512-6057	PORT CTB (REMOVE)(LOW PROF)(TY 1)	LF	463
0512-6058	PORT CTB (REMOVE)(LOW PROF)(TY 2)	LF	60
0662-6004	WK ZN PAV MRK NON-REMOV (W)4"(SLD)	LF	554
0662-6034	WK ZN PAV MRK NON-REMOV (Y)4"(SLD)	LF	511

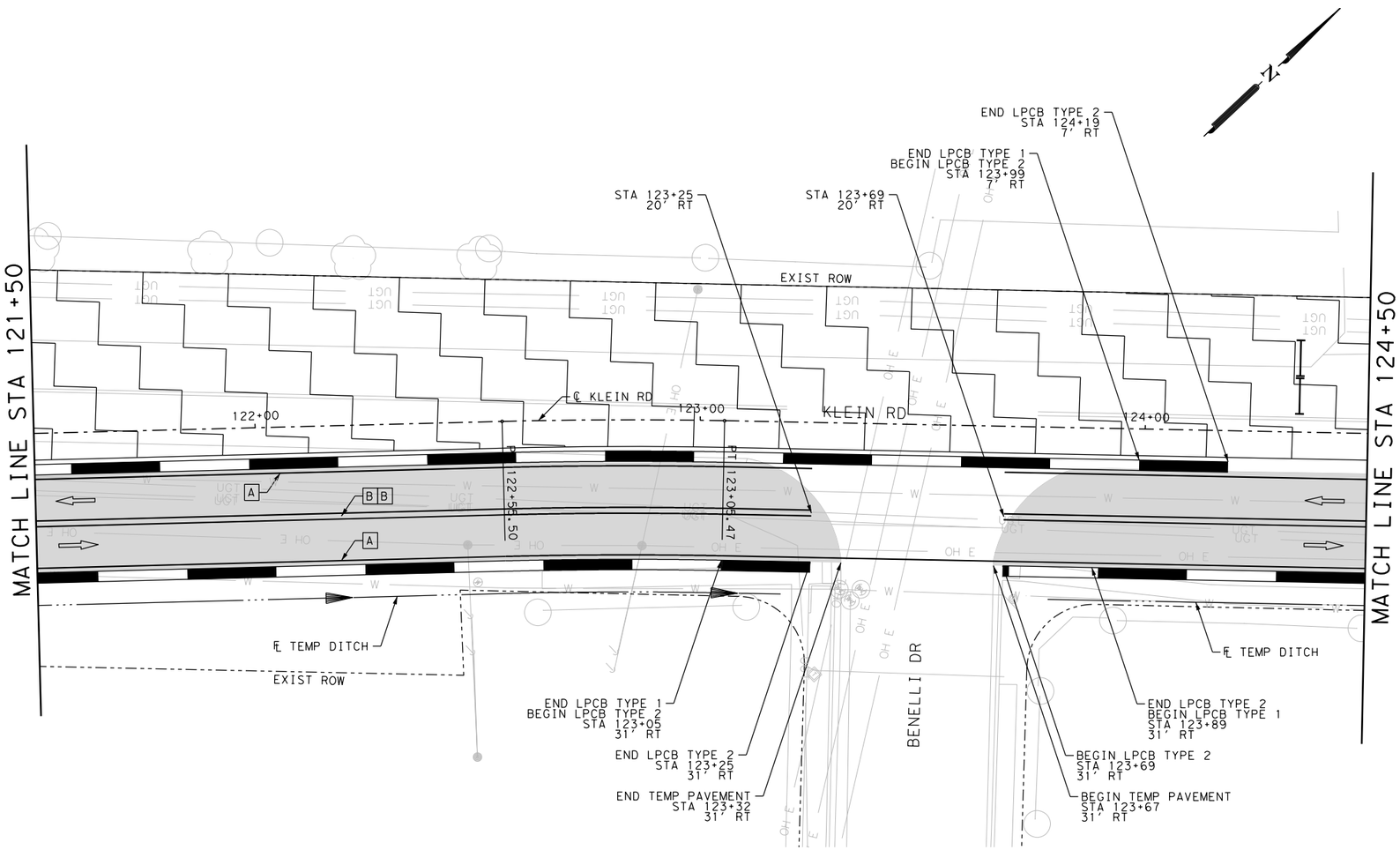

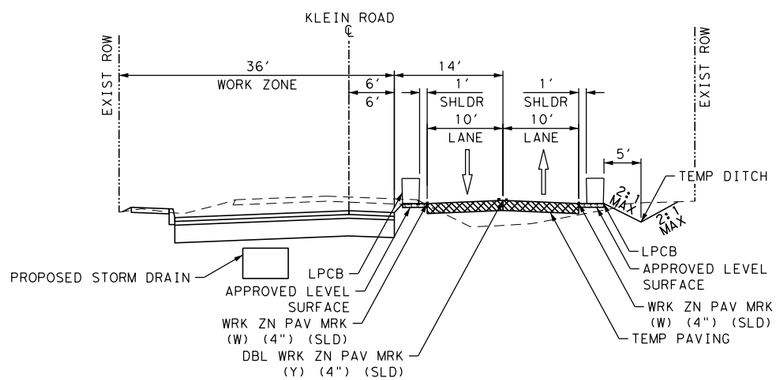

PHASE 2 STEP 1

N.T.S.
119+32 TO 133+65

LEGEND

- SIGN
- TYPE III BARRICADE
- TRAFFIC FLOW ARROWS
- TEMPORARY PAVEMENT
- CONSTRUCTION PHASE
- PLASTIC DRUM
- LOW PROFILE CONCRETE BARRIER TYPE 1 AND TYPE 2

A	NON-REMOV (W)4"(SLD)	G	ELIM (8")
B	NON-REMOV (Y)4"(SLD)	H	ELIM (24")
C	NON-REMOV (W)24"(SLD)	I	ELIM (MED NOSE)
D	ELIM (4")	J	REMOV (W)4"(SLD)
E	ELIM (ARROW)	K	REMOV (Y)4"(SLD)
F	ELIM (WORD)	L	REMOV (W)8"(SLD)

DESIGN

INTERIM REVIEW
DOCUMENT INCOMPLETE. NOT INTENDED FOR PERMIT, BIDDING OR CONSTRUCTION.
ENGINEER: JAKE BOEKAMP
P.E. SERIAL NO: 129661
DATE: 1/9/2020

APPROVAL

INTERIM REVIEW
DOCUMENT INCOMPLETE. NOT INTENDED FOR PERMIT, BIDDING OR CONSTRUCTION.
ENGINEER: JOHN A. TYLER
P.E. SERIAL NO: 105193
DATE: 1/9/2020

0 10 20 30 60

SCALE: PLAN 1" = 30'

REV. NO.	DATE	DESCRIPTION	BY

PAPE-DAWSON ENGINEERS
SAN ANTONIO | AUSTIN | HOUSTON | FORT WORTH | DALLAS
2000 NW LOOP 410 | SAN ANTONIO, TX 78213 | 210.375.9000
TBPE FIRM REGISTRATION #470 | TBPLS FIRM REGISTRATION #10028800

City of New Braunfels

KLEIN RD PHASE 2

TRAFFIC CONTROL PLAN PHASE 2 STEP 1

SHEET 9 OF 19

DGN:	STATE	PROJECT NO.	ROADWAY
CHK DGN:	TEXAS	NB 18-026	KLEIN RD
DWG:	COUNTY	CITY	SHEET NO.
CHK DWG:	GUADALUPE	NEW BRAUNFELS	59

Plotted on: 1/9/2020

Design Filename: H:\Projects\510\30\03\Design\Civil\TCP\Phase1\5103003tcp209.dgn

ITEM	DESCRIPTION	UNIT	QTY
0508-6001	CONSTRUCTING DETOURS	SY	731
0512-6009	PORT CTB (FUR & INST)(LOW PROF)(TY 1)	LF	380
0512-6010	PORT CTB (FUR & INST)(LOW PROF)(TY 2)	LF	40
0512-6057	PORT CTB (REMOVE)(LOW PROF)(TY 1)	LF	380
0512-6058	PORT CTB (REMOVE)(LOW PROF)(TY 2)	LF	40
0662-6004	WK ZN PAV MRK NON-REMOV (W)4"(SLD)	LF	572
0662-6034	WK ZN PAV MRK NON-REMOV (Y)4"(SLD)	LF	543

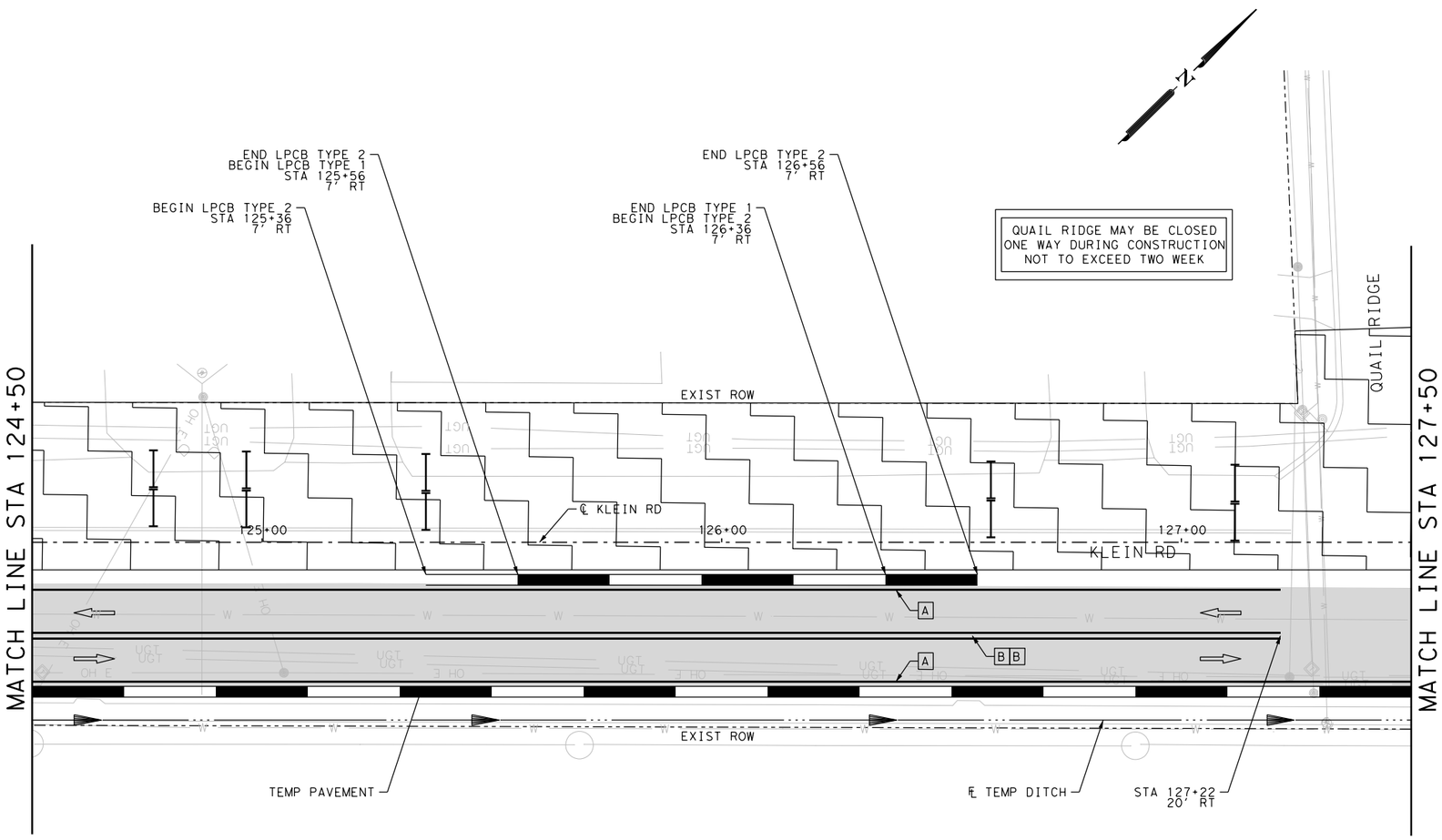

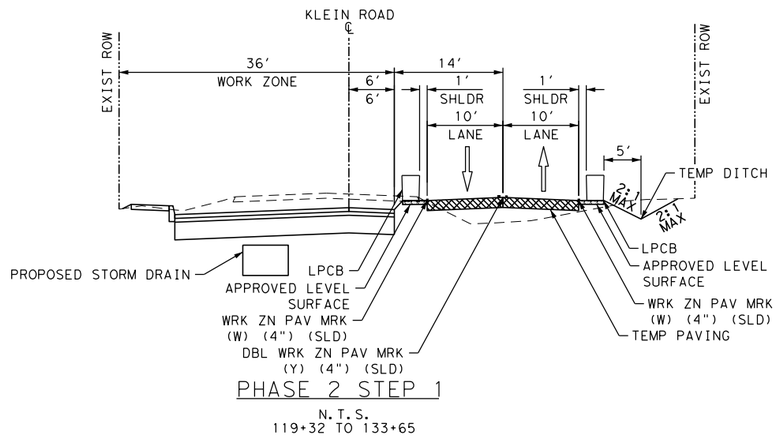

PHASE 2 STEP 1

N.T.S.
119+32 TO 133+65

LEGEND

- SIGN
- TYPE III BARRICADE
- TRAFFIC FLOW ARROWS
- TEMPORARY PAVEMENT
- CONSTRUCTION PHASE
- PLASTIC DRUM
- LOW PROFILE CONCRETE BARRIER TYPE 1 AND TYPE 2

A	NON-REMOV (W)4"(SLD)	G	ELIM (8")
B	NON-REMOV (Y)4"(SLD)	H	ELIM (24")
C	NON-REMOV (W)24"(SLD)	I	ELIM (MED NOSE)
D	ELIM (4")	J	REMOV (W)4"(SLD)
E	ELIM (ARROW)	K	REMOV (Y)4"(SLD)
F	ELIM (WORD)	L	REMOV (W)8"(SLD)

DESIGN

INTERIM REVIEW
DOCUMENT INCOMPLETE. NOT INTENDED FOR PERMIT, BIDDING OR CONSTRUCTION.
ENGINEER: JAKE BOEKAMP
P.E. SERIAL NO: 129661
DATE: 1/9/2020

APPROVAL

INTERIM REVIEW
DOCUMENT INCOMPLETE. NOT INTENDED FOR PERMIT, BIDDING OR CONSTRUCTION.
ENGINEER: JOHN A. TYLER
P.E. SERIAL NO: 105193
DATE: 1/9/2020

0 10 20 30 60

SCALE: PLAN 1"= 30'

REV.NO.	DATE	DESCRIPTION	BY

PAPE-DAWSON ENGINEERS
SAN ANTONIO | AUSTIN | HOUSTON | FORT WORTH | DALLAS
2000 NW LOOP 410 | SAN ANTONIO, TX 78213 | 210.375.9000
TBPE FIRM REGISTRATION #470 | TBPLS FIRM REGISTRATION #10028800

City of New Braunfels

KLEIN RD PHASE 2

TRAFFIC CONTROL PLAN PHASE 2 STEP 1

SHEET 10 OF 19

DGN:	STATE	PROJECT NO.	ROADWAY
CHK DGN:	TEXAS	NB 18-026	KLEIN RD
DWG:	COUNTY	CITY	SHEET NO.
CHK DWG:	GUADALUPE	NEW BRAUNFELS	60

Plotted on: 1/9/2020

Design Filename: H:\Projects\510\30\03\Design\Civil\TCP\PhaseII\5103003tcp210.dgn

Plotted on: 1/9/2020

ITEM	DESCRIPTION	UNIT	QTY
0508-6001	CONSTRUCTING DETOURS	SY	704
0512-6009	PORT CTB (FUR & INST)(LOW PROF)(TY 1)	LF	553
0512-6010	PORT CTB (FUR & INST)(LOW PROF)(TY 2)	LF	20
0512-6057	PORT CTB (REMOVE)(LOW PROF)(TY 1)	LF	553
0512-6058	PORT CTB (REMOVE)(LOW PROF)(TY 2)	LF	20
0662-6004	WK ZN PAV MRK NON-REMOV (W)4"(SLD)	LF	573
0662-6034	WK ZN PAV MRK NON-REMOV (Y)4"(SLD)	LF	546

QUAIL RIDGE MAY BE CLOSED ONE WAY DURING CONSTRUCTION NOT TO EXCEED TWO WEEK

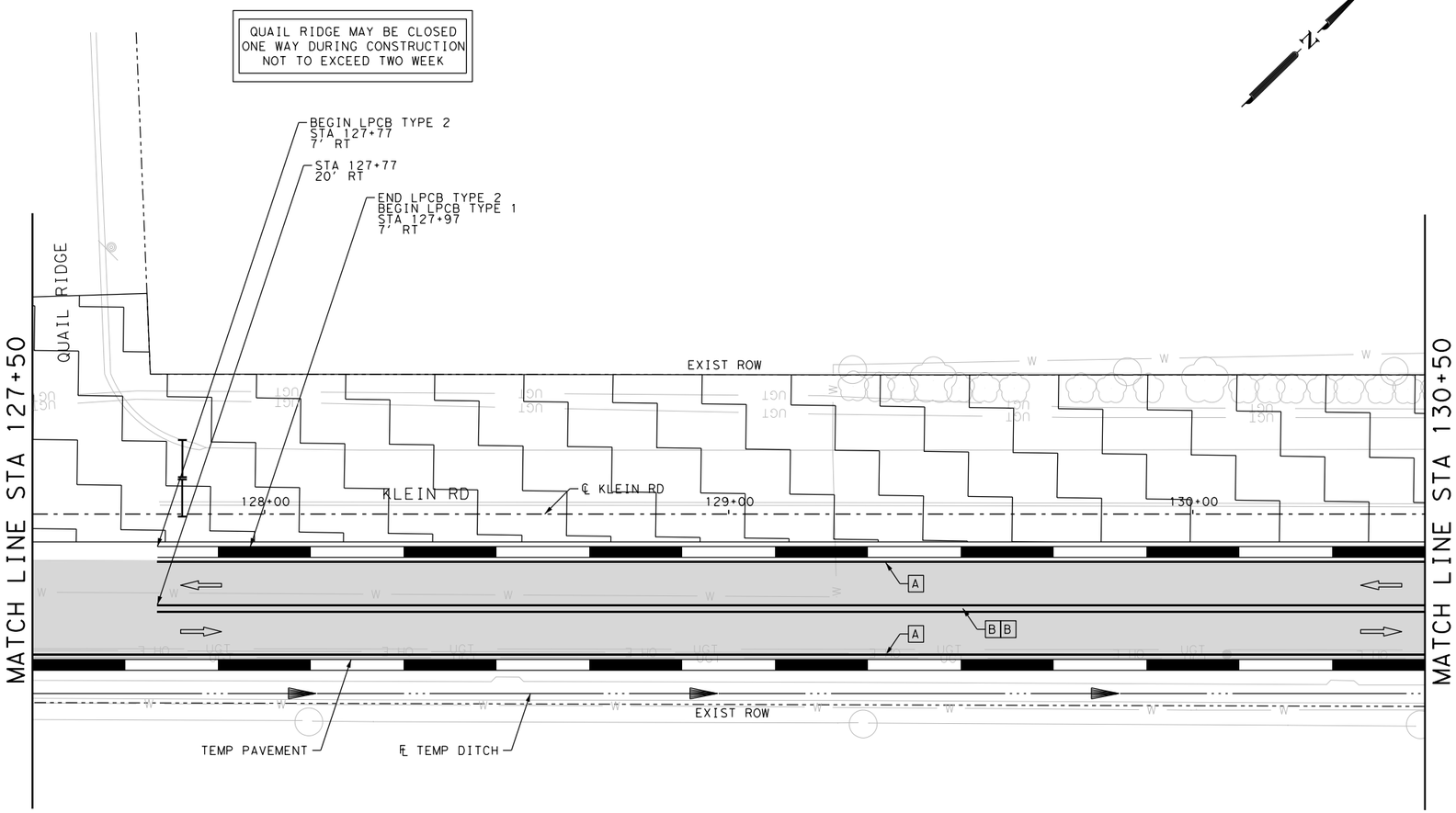

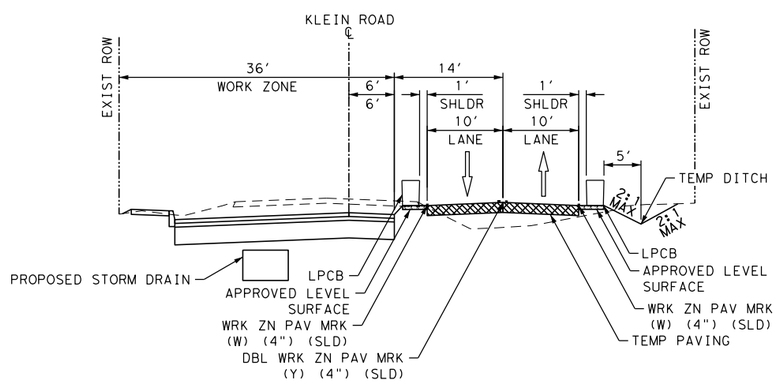

PHASE 2 STEP 1

N.T.S.
119+32 TO 133+65

LEGEND

- SIGN
- TYPE III BARRICADE
- TRAFFIC FLOW ARROWS
- TEMPORARY PAVEMENT
- CONSTRUCTION PHASE
- PLASTIC DRUM
- LOW PROFILE CONCRETE BARRIER TYPE 1 AND TYPE 2

A	NON-REMOV (W)4"(SLD)	G	ELIM (8")
B	NON-REMOV (Y)4"(SLD)	H	ELIM (24")
C	NON-REMOV (W)24"(SLD)	I	ELIM (MED NOSE)
D	ELIM (4")	J	REMOV (W)4"(SLD)
E	ELIM (ARROW)	K	REMOV (Y)4"(SLD)
F	ELIM (WORD)	L	REMOV (W)8"(SLD)

DESIGN

INTERIM REVIEW
DOCUMENT INCOMPLETE. NOT INTENDED FOR PERMIT, BIDDING OR CONSTRUCTION.
ENGINEER: JAKE BOEKAMP
P.E. SERIAL NO: 129661
DATE: 1/9/2020

APPROVAL

INTERIM REVIEW
DOCUMENT INCOMPLETE. NOT INTENDED FOR PERMIT, BIDDING OR CONSTRUCTION.
ENGINEER: JOHN A. TYLER
P.E. SERIAL NO: 105193
DATE: 1/9/2020

0 10 20 30 60

SCALE: PLAN 1" = 30'

REV. NO.	DATE	DESCRIPTION	BY

PAPE-DAWSON ENGINEERS
SAN ANTONIO | AUSTIN | HOUSTON | FORT WORTH | DALLAS
2000 NW LOOP 410 | SAN ANTONIO, TX 78213 | 210.375.9000
TBPE FIRM REGISTRATION #470 | TBPLS FIRM REGISTRATION #10028800

City of New Braunfels

KLEIN RD PHASE 2

TRAFFIC CONTROL PLAN PHASE 2 STEP 1

SHEET 11 OF 19

DGN:	STATE	PROJECT NO.	ROADWAY
CHK DGN:	TEXAS	NB 18-026	KLEIN RD
DWG:	COUNTY	CITY	SHEET NO.
CHK DWG:	GUADALUPE	NEW BRAUNFELS	61

Design Filename: H:\Projects\510\30\03\Design\Civil\TCP\PhaseII\5103003tcp211.dgn

ITEM	DESCRIPTION	UNIT	QTY
0508-6001	CONSTRUCTING DETOURS	SY	512
0512-6009	PORT CTB (FUR & INST)(LOW PROF)(TY 1)	LF	325
0512-6010	PORT CTB (FUR & INST)(LOW PROF)(TY 2)	LF	40
0512-6057	PORT CTB (REMOVE)(LOW PROF)(TY 1)	LF	325
0512-6058	PORT CTB (REMOVE)(LOW PROF)(TY 2)	LF	40
0662-6004	WK ZN PAV MRK NON-REMOV (W)4"(SLD)	LF	550
0662-6034	WK ZN PAV MRK NON-REMOV (Y)4"(SLD)	LF	514

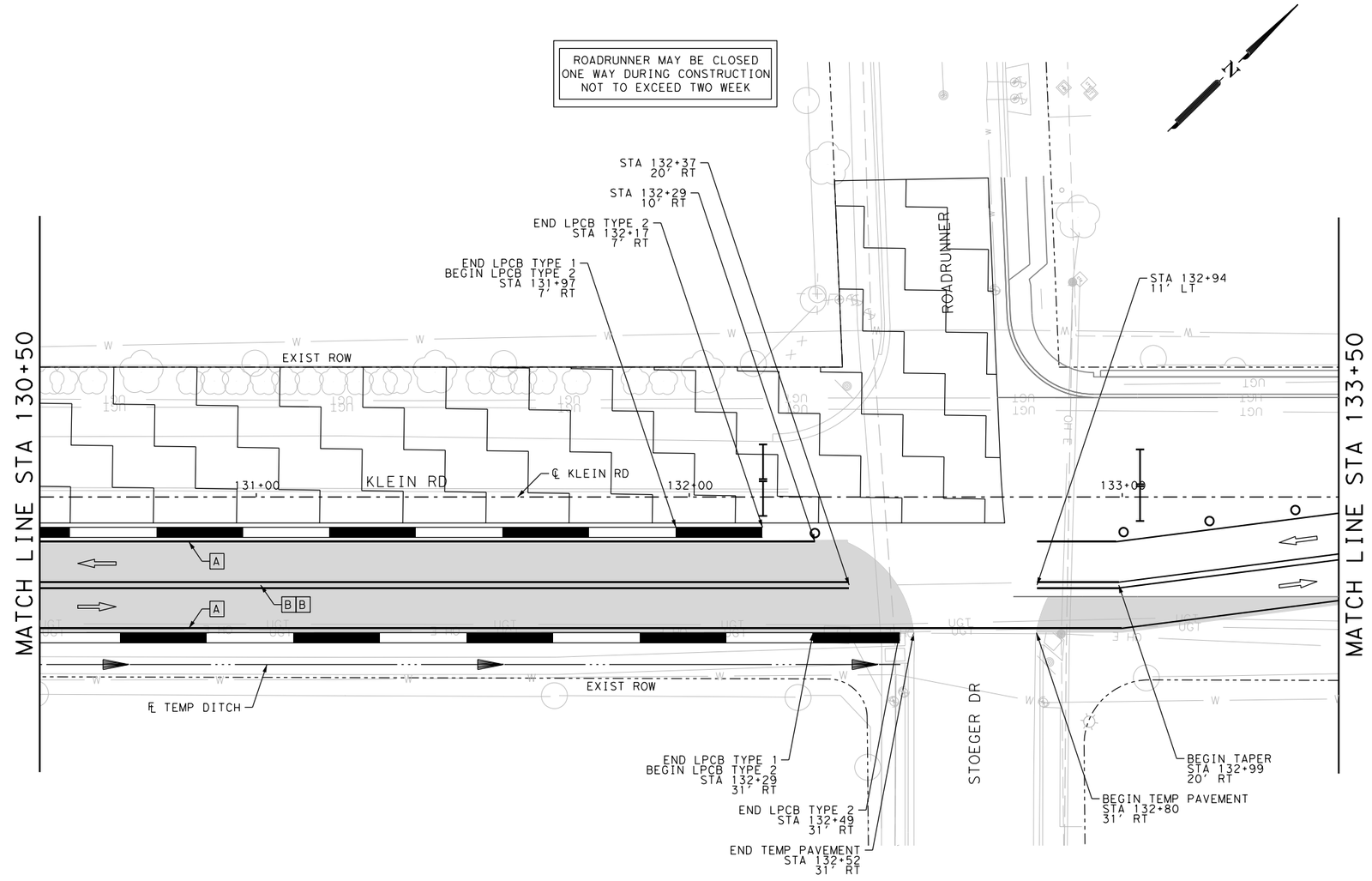

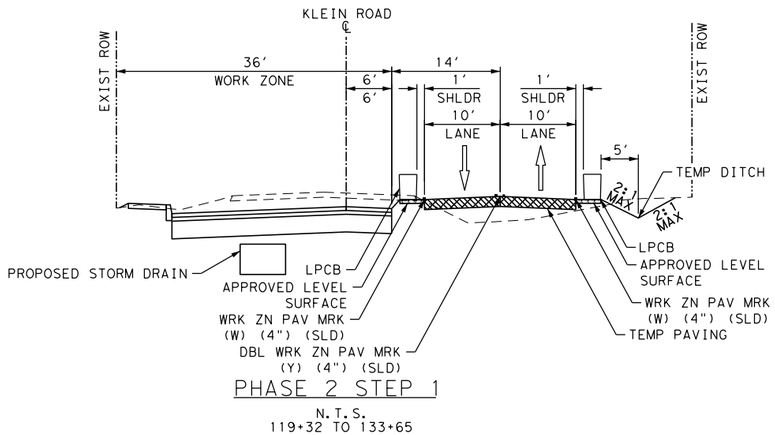

PHASE 2 STEP 1

N.T.S.

119+32 TO 133+65

LEGEND

- SIGN
- TYPE III BARRICADE
- TRAFFIC FLOW ARROWS
- TEMPORARY PAVEMENT
- CONSTRUCTION PHASE
- PLASTIC DRUM
- LOW PROFILE CONCRETE BARRIER TYPE 1 AND TYPE 2

A	NON-REMOV (W)4"(SLD)	G	ELIM (8")
B	NON-REMOV (Y)4"(SLD)	H	ELIM (24")
C	NON-REMOV (W)24"(SLD)	I	ELIM (MED NOSE)
D	ELIM (4")	J	REMOV (W)4"(SLD)
E	ELIM (ARROW)	K	REMOV (Y)4"(SLD)
F	ELIM (WORD)	L	REMOV (W)8"(SLD)

DESIGN

INTERIM REVIEW

DOCUMENT INCOMPLETE. NOT INTENDED FOR PERMIT, BIDDING OR CONSTRUCTION.
ENGINEER: JAKE BOEKAMP
P.E. SERIAL NO: 129661
DATE: 1/9/2020

APPROVAL

INTERIM REVIEW

DOCUMENT INCOMPLETE. NOT INTENDED FOR PERMIT, BIDDING OR CONSTRUCTION.
ENGINEER: JOHN A. TYLER
P.E. SERIAL NO: 105193
DATE: 1/9/2020

0 10 20 30 60

SCALE: PLAN 1" = 30'

REV. NO.	DATE	DESCRIPTION	BY

PAPE-DAWSON ENGINEERS
SAN ANTONIO | AUSTIN | HOUSTON | FORT WORTH | DALLAS
2000 NW LOOP 410 | SAN ANTONIO, TX 78213 | 210.375.9000
TBPE FIRM REGISTRATION #470 | TBPLS FIRM REGISTRATION #10028800

City of New Braunfels

KLEIN RD PHASE 2

TRAFFIC CONTROL PLAN PHASE 2 STEP 1

SHEET 12 OF 19

DGN:	STATE	PROJECT NO.	ROADWAY
CHK DGN:	TEXAS	NB 18-026	KLEIN RD
DWG:	COUNTY	CITY	SHEET NO.
CHK DWG:	GUADALUPE	NEW BRAUNFELS	62

Plotted on: 1/9/2020

Design Filename: H:\Projects\510\30\03\Design\Civil\TCP\PhaseII\5103003tcp212.dgn

Plotted on: 1/9/2020

ITEM	DESCRIPTION	UNIT	QTY
0508-6001	CONSTRUCTING DETOURS	SY	2
0662-6004	WK ZN PAV MRK NON-REMOV (W)4"(SLD)	LF	599
0662-6034	WK ZN PAV MRK NON-REMOV (Y)4"(SLD)	LF	599

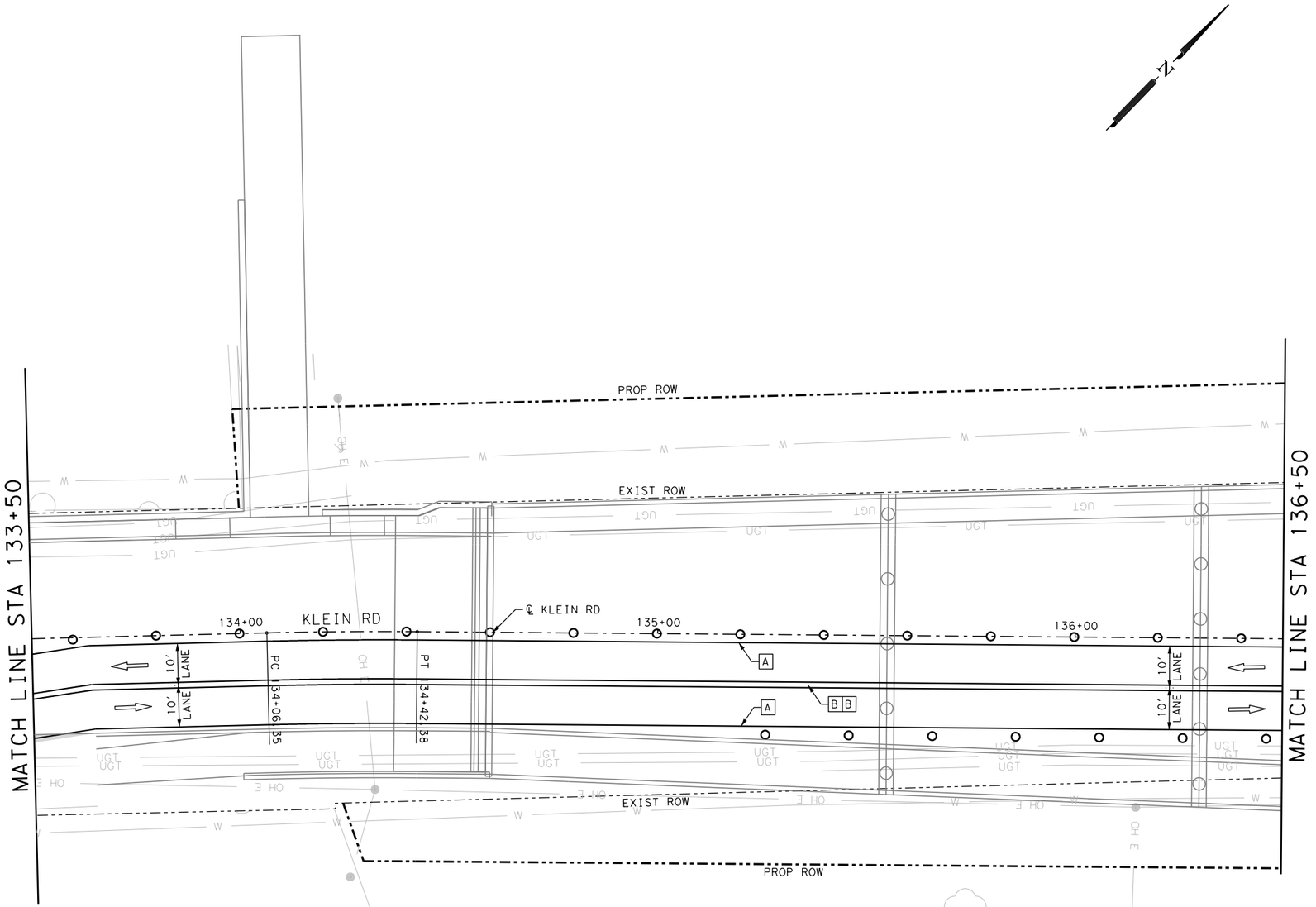

LEGEND

- SIGN
- TYPE III BARRICADE
- TRAFFIC FLOW ARROWS
- TEMPORARY PAVEMENT
- CONSTRUCTION PHASE
- PLASTIC DRUM
- LOW PROFILE CONCRETE BARRIER TYPE 1 AND TYPE 2

A	NON-REMOV (W)4"(SLD)	G	ELIM (8")
B	NON-REMOV (Y)4"(SLD)	H	ELIM (24")
C	NON-REMOV (W)24"(SLD)	I	ELIM (MED NOSE)
D	ELIM (4")	J	REMOV (W)4"(SLD)
E	ELIM (ARROW)	K	REMOV (Y)4"(SLD)
F	ELIM (WORD)	L	REMOV (W)8"(SLD)

DESIGN

INTERIM REVIEW
DOCUMENT INCOMPLETE. NOT INTENDED FOR PERMIT, BIDDING OR CONSTRUCTION.
ENGINEER: JAKE BOEKAMP
P.E. SERIAL NO: 129661
DATE: 1/9/2020

APPROVAL

INTERIM REVIEW
DOCUMENT INCOMPLETE. NOT INTENDED FOR PERMIT, BIDDING OR CONSTRUCTION.
ENGINEER: JOHN A. TYLER
P.E. SERIAL NO: 105193
DATE: 1/9/2020

0 10 20 30 60

SCALE: PLAN 1" = 30'

REV. NO.	DATE	DESCRIPTION	BY

PAPE-DAWSON ENGINEERS
SAN ANTONIO | AUSTIN | HOUSTON | FORT WORTH | DALLAS
2000 NW LOOP 410 | SAN ANTONIO, TX 78213 | 210.375.9000
TBPE FIRM REGISTRATION #470 | TBPLS FIRM REGISTRATION #10028800

City of New Braunfels

KLEIN RD PHASE 2

TRAFFIC CONTROL PLAN PHASE 2 STEP 1

SHEET 13 OF 19

DGN:	STATE	PROJECT NO.	ROADWAY
CHK DGN:	TEXAS	NB 18-026	KLEIN RD
DWG:	COUNTY	CITY	SHEET NO.
CHK DWG:	GUADALUPE	NEW BRAUNFELS	63

Design Filename: H:\Projects\510\30\03\Design\Civil\TCP\Phase1\5103003tcp213.dgn

ITEM	DESCRIPTION	UNIT	QTY
0662-6004	WK ZN PAV MRK NON-REMOV (W)4"(SLD)	LF	605
0662-6034	WK ZN PAV MRK NON-REMOV (Y)4"(SLD)	LF	608

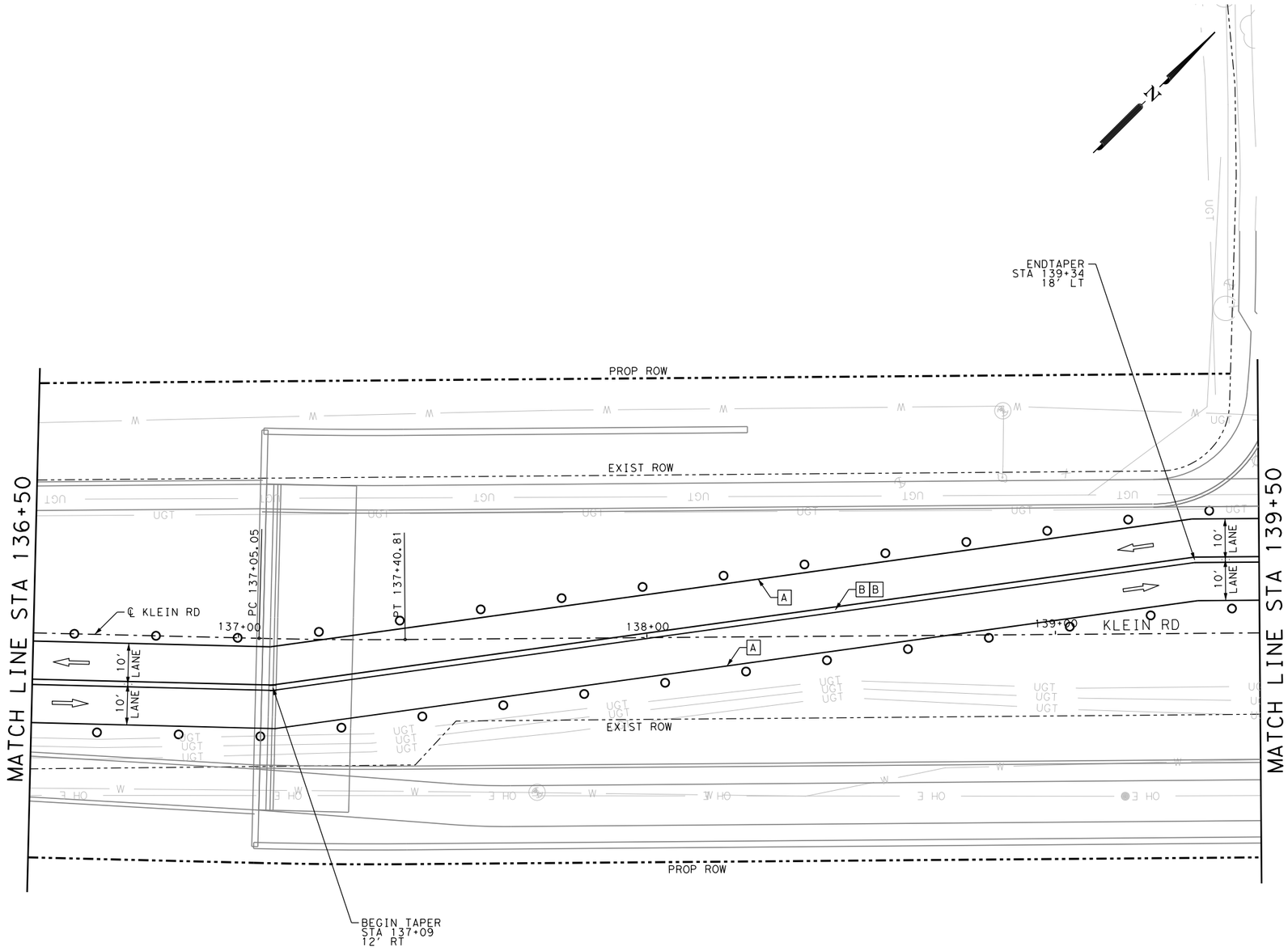

LEGEND

- SIGN
- TYPE III BARRICADE
- TRAFFIC FLOW ARROWS
- TEMPORARY PAVEMENT
- CONSTRUCTION PHASE
- PLASTIC DRUM
- LOW PROFILE CONCRETE BARRIER TYPE 1 AND TYPE 2

A	NON-REMOV (W)4"(SLD)	G	ELIM (8")
B	NON-REMOV (Y)4"(SLD)	H	ELIM (24")
C	NON-REMOV (W)24"(SLD)	I	ELIM (MED NOSE)
D	ELIM (4")	J	REMOV (W)4"(SLD)
E	ELIM (ARROW)	K	REMOV (Y)4"(SLD)
F	ELIM (WORD)	L	REMOV (W)8"(SLD)

DESIGN

INTERIM REVIEW
DOCUMENT INCOMPLETE. NOT INTENDED FOR PERMIT, BIDDING OR CONSTRUCTION.
ENGINEER: JAKE BOEKAMP
P.E. SERIAL NO: 129661
DATE: 1/9/2020

APPROVAL

INTERIM REVIEW
DOCUMENT INCOMPLETE. NOT INTENDED FOR PERMIT, BIDDING OR CONSTRUCTION.
ENGINEER: JOHN A. TYLER
P.E. SERIAL NO: 105193
DATE: 1/9/2020

0 10 20 30 60

SCALE: PLAN 1"= 30'

REV.NO.	DATE	DESCRIPTION	BY

PAPE-DAWSON ENGINEERS
SAN ANTONIO | AUSTIN | HOUSTON | FORT WORTH | DALLAS
2000 NW LOOP 410 | SAN ANTONIO, TX 78213 | 210.375.9000
TBPE FIRM REGISTRATION #470 | TBPLS FIRM REGISTRATION #10028800

City of New Braunfels

KLEIN RD PHASE 2

TRAFFIC CONTROL PLAN PHASE 2 STEP 1

SHEET 14 OF 19

DGN:	STATE	PROJECT NO.	ROADWAY
CHK DGN:	TEXAS	NB 18-026	KLEIN RD
DWG:	COUNTY	CITY	SHEET NO.
CHK DWG:	GUADALUPE	NEW BRAUNFELS	64

Plotted on: 1/9/2020

Design Filename: H:\Projects\510\30\03\Design\Civil\TCP\PhaseII\5103003tcp214.dgn

ITEM	DESCRIPTION	UNIT	QTY
0662-6004	WK ZN PAV MRK NON-REMOV (W)4"(SLD)	LF	518
0662-6034	WK ZN PAV MRK NON-REMOV (Y)4"(SLD)	LF	435

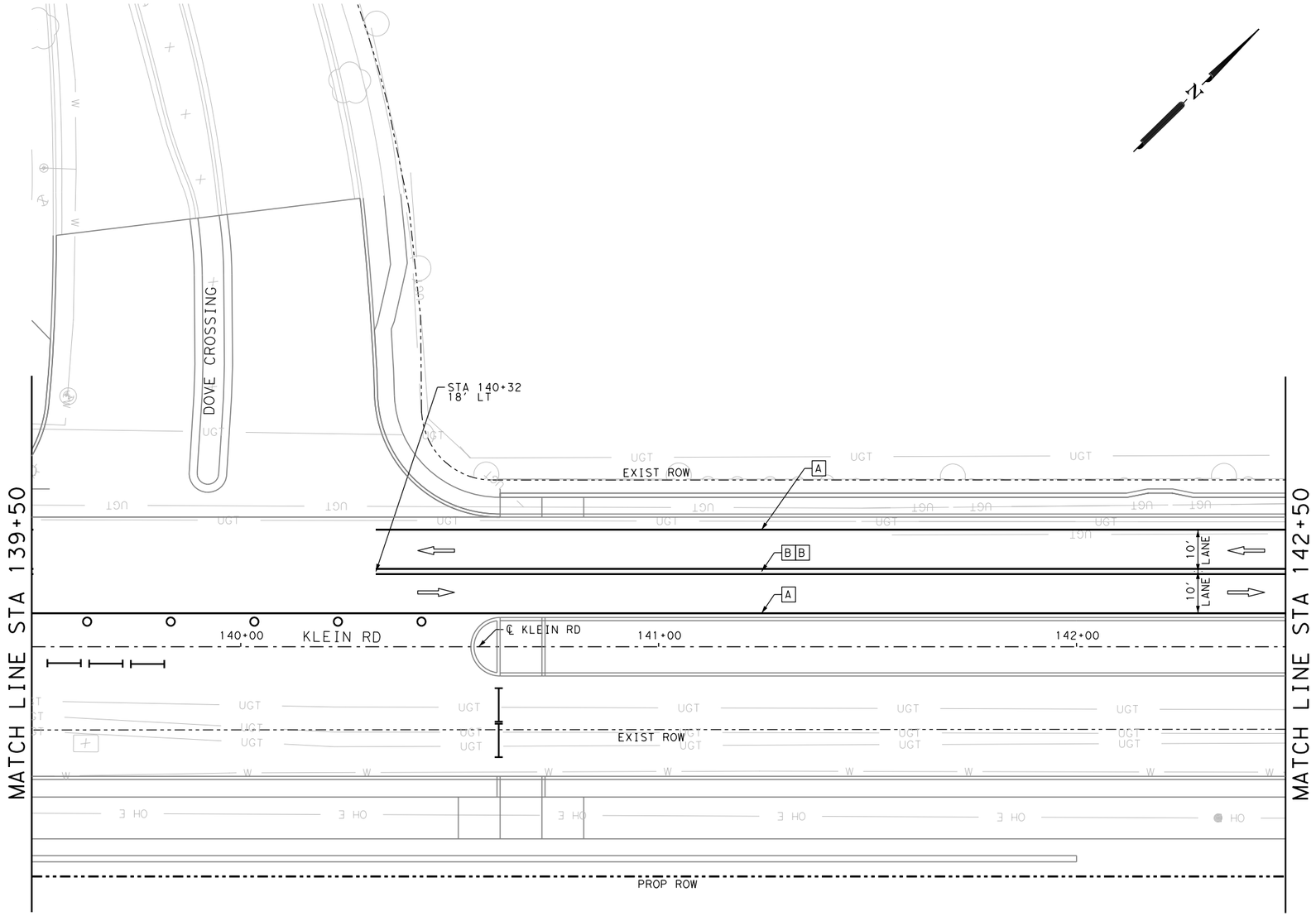

LEGEND

- SIGN
- TYPE III BARRICADE
- TRAFFIC FLOW ARROWS
- TEMPORARY PAVEMENT
- CONSTRUCTION PHASE
- PLASTIC DRUM
- LOW PROFILE CONCRETE BARRIER TYPE 1 AND TYPE 2

A	NON-REMOV (W)4"(SLD)	G	ELIM (8")
B	NON-REMOV (Y)4"(SLD)	H	ELIM (24")
C	NON-REMOV (W)24"(SLD)	I	ELIM (MED NOSE)
D	ELIM (4")	J	REMOV (W)4"(SLD)
E	ELIM (ARROW)	K	REMOV (Y)4"(SLD)
F	ELIM (WORD)	L	REMOV (W)8"(SLD)

DESIGN

INTERIM REVIEW

DOCUMENT INCOMPLETE. NOT INTENDED FOR PERMIT, BIDDING OR CONSTRUCTION.
ENGINEER: JAKE BOEKAMP
P.E. SERIAL NO: 129661
DATE: 1/9/2020

APPROVAL

INTERIM REVIEW

DOCUMENT INCOMPLETE. NOT INTENDED FOR PERMIT, BIDDING OR CONSTRUCTION.
ENGINEER: JOHN A. TYLER
P.E. SERIAL NO: 105193
DATE: 1/9/2020

0 10 20 30 60

SCALE: PLAN 1"= 30'

REV. NO.	DATE	DESCRIPTION	BY

PAPE-DAWSON ENGINEERS
SAN ANTONIO | AUSTIN | HOUSTON | FORT WORTH | DALLAS
2000 NW LOOP 410 | SAN ANTONIO, TX 78213 | 210.375.9000
TBPE FIRM REGISTRATION #470 | TBPLS FIRM REGISTRATION #10028800

City of New Braunfels

KLEIN RD PHASE 2

TRAFFIC CONTROL PLAN PHASE 2 STEP 1

SHEET 15 OF 19

DGN:	STATE	PROJECT NO.	ROADWAY
CHK DGN:	TEXAS	NB 18-026	KLEIN RD
DWG:	COUNTY	CITY	SHEET NO.
CHK DWG:	GUADALUPE	NEW BRAUNFELS	65

Plotted on: 1/9/2020

Design Filename: H:\Projects\510\30\03\Design\Civil\TCP\Phase1\510300 3tcp215.dgn

Plotted on: 1/9/2020

Design Filename: H:\Projects\510\30\03\Design\Civil\TCP\Phase1\5103003tcp216.dgn

ITEM	DESCRIPTION	UNIT	QTY
0508-6001	CONSTRUCTING DETOURS	SY	152
0512-6009	PORT CTB (FUR & INST)(LOW PROF)(TY 1)	LF	60
0512-6010	PORT CTB (FUR & INST)(LOW PROF)(TY 2)	LF	46
0512-6057	PORT CTB (REMOVE)(LOW PROF)(TY 1)	LF	60
0512-6058	PORT CTB (REMOVE)(LOW PROF)(TY 2)	LF	46
0662-6004	WK ZN PAV MRK NON-REMOV (W)4"(SLD)	LF	600
0662-6034	WK ZN PAV MRK NON-REMOV (Y)4"(SLD)	LF	300
0677-6001	ELIM EXT PAV MRK & MRKS (4")	LF	350
0677-6008	ELIM EXT PAV MRK & MRKS (ARROW)	EA	
0677-6012	ELIM EXT PAV MRK & MRKS (WORD)	EA	
0677-6020	ELIM EXT PAV MRK & MRKS (MED NOSE)	EA	

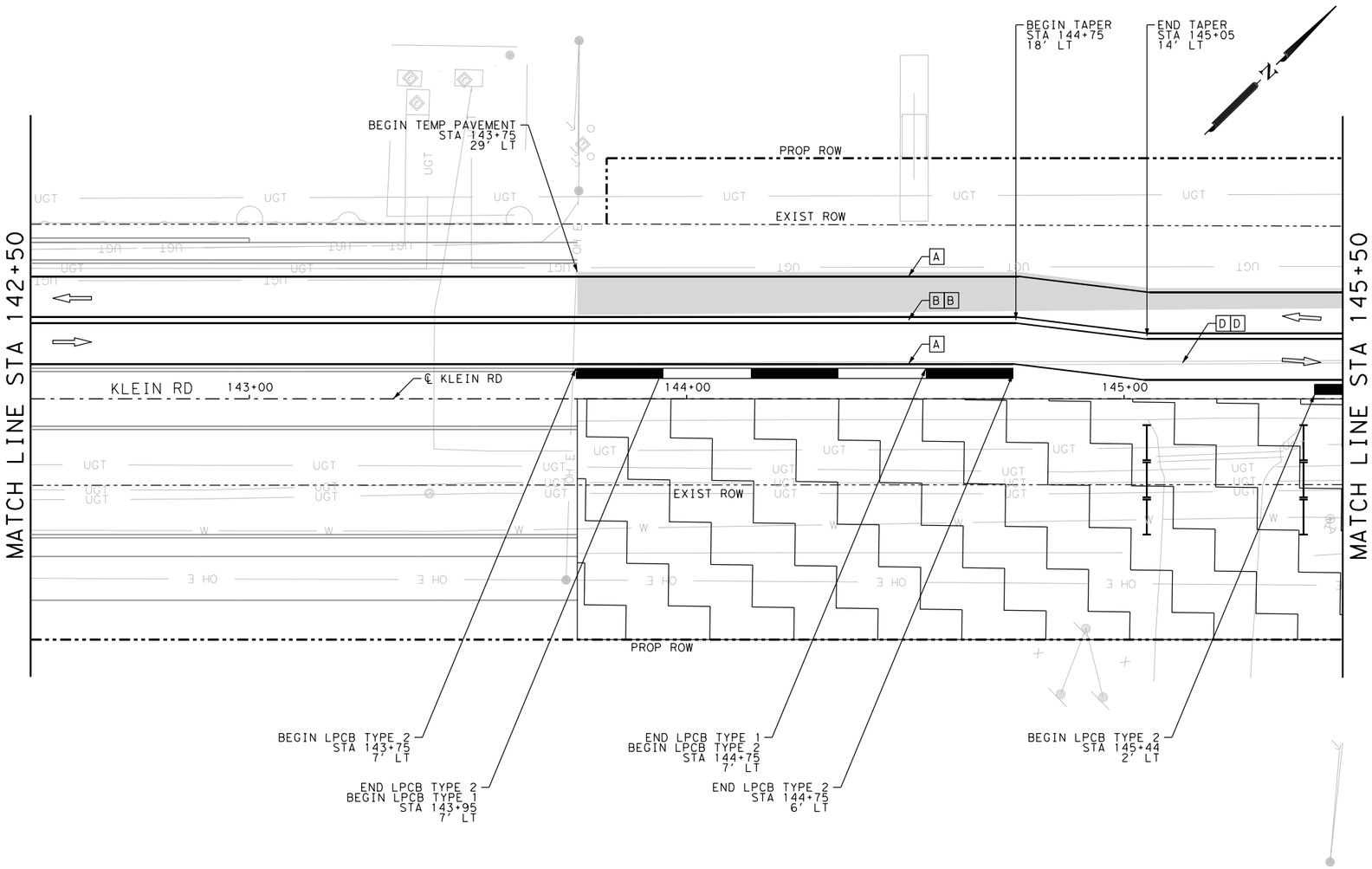

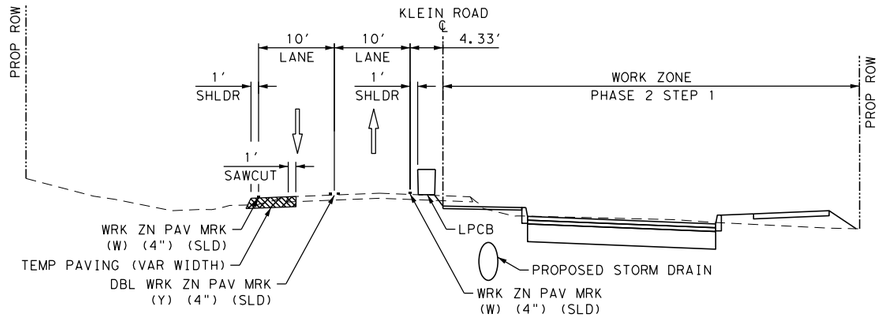

PHASE 2 STEP 1

N.T.S.
143+75 TO 146+00

LEGEND

- SIGN
- TYPE III BARRICADE
- TRAFFIC FLOW ARROWS
- TEMPORARY PAVEMENT
- CONSTRUCTION PHASE
- PLASTIC DRUM
- LOW PROFILE CONCRETE BARRIER TYPE 1 AND TYPE 2

A	NON-REMOV (W)4"(SLD)	G	ELIM (8")
B	NON-REMOV (Y)4"(SLD)	H	ELIM (24")
C	NON-REMOV (W)24"(SLD)	I	ELIM (MED NOSE)
D	ELIM (4")	J	REMOV (W)4"(SLD)
E	ELIM (ARROW)	K	REMOV (Y)4"(SLD)
F	ELIM (WORD)	L	REMOV (W)8"(SLD)

DESIGN

INTERIM REVIEW
DOCUMENT INCOMPLETE. NOT INTENDED FOR PERMIT, BIDDING OR CONSTRUCTION.
ENGINEER: JAKE BOEKAMP
P.E. SERIAL NO: 129661
DATE: 1/9/2020

APPROVAL

INTERIM REVIEW
DOCUMENT INCOMPLETE. NOT INTENDED FOR PERMIT, BIDDING OR CONSTRUCTION.
ENGINEER: JOHN A. TYLER
P.E. SERIAL NO: 105193
DATE: 1/9/2020

0 10 20 30 60

SCALE: PLAN 1"= 30'

REV. NO.	DATE	DESCRIPTION	BY

PAPE-DAWSON ENGINEERS
SAN ANTONIO | AUSTIN | HOUSTON | FORT WORTH | DALLAS
2000 NW LOOP 410 | SAN ANTONIO, TX 78213 | 210.375.9000
TBPE FIRM REGISTRATION #470 | TBPLS FIRM REGISTRATION #10028800

City of New Braunfels

KLEIN RD PHASE 2

TRAFFIC CONTROL PLAN PHASE 2 STEP 1

SHEET 16 OF 19

DGN:	STATE	PROJECT NO.	ROADWAY
CHK DGN:	TEXAS	NB 18-026	KLEIN RD
DWG:	COUNTY	CITY	SHEET NO.
CHK DWG:	GUADALUPE	NEW BRAUNFELS	66

Plotted on: 1/9/2020

Design Filename: H:\Projects\510\30\03\Design\Civil\TCP\Phase1\5103003tcp217.dgn

ITEM	DESCRIPTION	UNIT	QTY
0508-6001	CONSTRUCTING DETOURS	SY	128
0512-6009	PORT CTB (FUR & INST)(LOW PROF)(TY 1)	LF	286
0512-6010	PORT CTB (FUR & INST)(LOW PROF)(TY 2)	LF	14
0512-6057	PORT CTB (REMOVE)(LOW PROF)(TY 1)	LF	286
0512-6058	PORT CTB (REMOVE)(LOW PROF)(TY 2)	LF	14
0662-6004	WK ZN PAV MRK NON-REMOV (W)4"(SLD)	LF	600
0662-6034	WK ZN PAV MRK NON-REMOV (Y)4"(SLD)	LF	600
0677-6001	ELIM EXT PAV MRK & MRKS (4")	LF	680
0677-6008	ELIM EXT PAV MRK & MRKS (ARROW)	EA	
0677-6012	ELIM EXT PAV MRK & MRKS (WORD)	EA	
0677-6020	ELIM EXT PAV MRK & MRKS (MED NOSE)	EA	

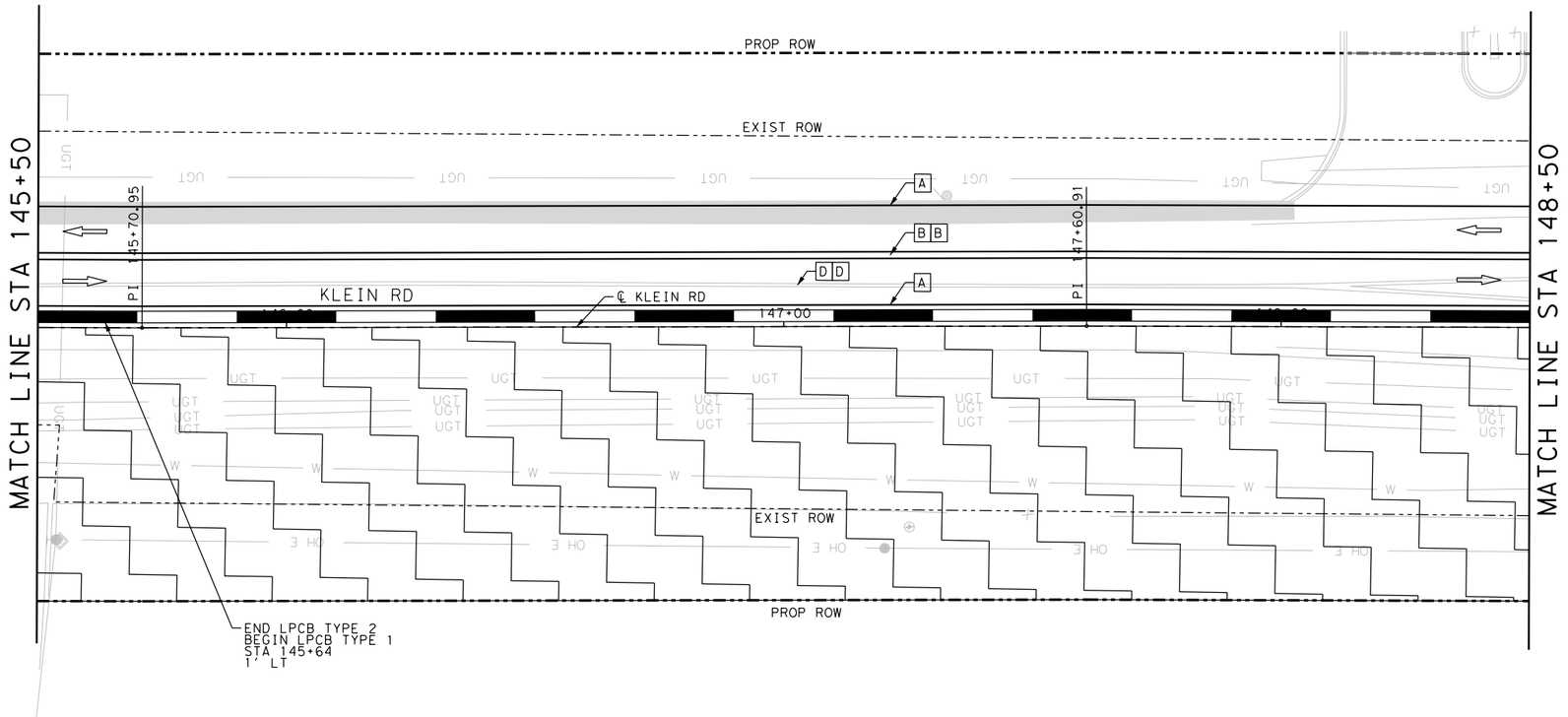

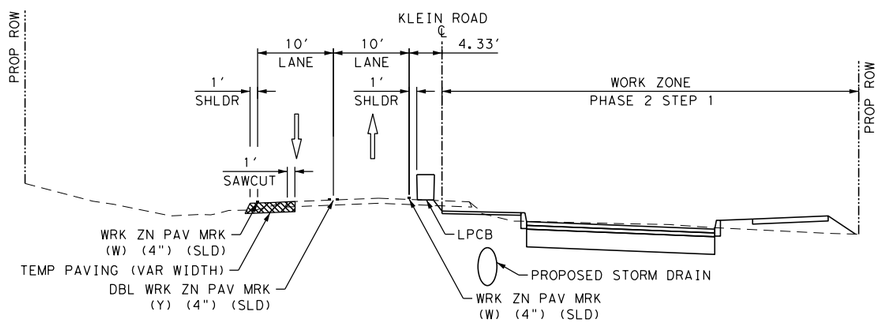

PHASE 2 STEP 1

N.T.S.

143+75 TO 146+00

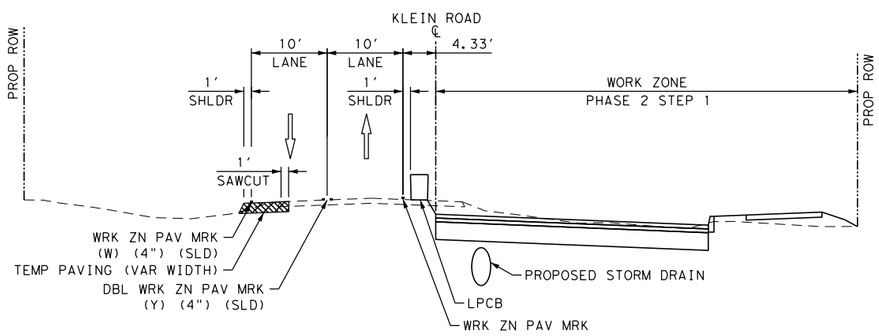

PHASE 2 STEP 1

N.T.S.

146+00 TO END

LEGEND

- SIGN
- TYPE III BARRICADE
- TRAFFIC FLOW ARROWS
- TEMPORARY PAVEMENT
- CONSTRUCTION PHASE
- PLASTIC DRUM
- LOW PROFILE CONCRETE BARRIER TYPE 1 AND TYPE 2

A	NON-REMOV (W)4"(SLD)	G	ELIM (8")
B	NON-REMOV (Y)4"(SLD)	H	ELIM (24")
C	NON-REMOV (W)24"(SLD)	I	ELIM (MED NOSE)
D	ELIM (4")	J	REMOV (W)4"(SLD)
E	ELIM (ARROW)	K	REMOV (Y)4"(SLD)
F	ELIM (WORD)	L	REMOV (W)8"(SLD)

DESIGN

INTERIM REVIEW

DOCUMENT INCOMPLETE. NOT INTENDED FOR PERMIT, BIDDING OR CONSTRUCTION.
ENGINEER: JAKE BOEKAMP
P.E. SERIAL NO: 129661
DATE: 1/9/2020

APPROVAL

INTERIM REVIEW

DOCUMENT INCOMPLETE. NOT INTENDED FOR PERMIT, BIDDING OR CONSTRUCTION.
ENGINEER: JOHN A. TYLER
P.E. SERIAL NO: 105193
DATE: 1/9/2020

0 10 20 30 60

SCALE: PLAN 1"= 30'

REV. NO.	DATE	DESCRIPTION	BY

PAPE-DAWSON ENGINEERS

SAN ANTONIO | AUSTIN | HOUSTON | FORT WORTH | DALLAS
2000 NW LOOP 410 | SAN ANTONIO, TX 78213 | 210.375.9000
TBPE FIRM REGISTRATION #470 | TBPLS FIRM REGISTRATION #10028800

City of New Braunfels

KLEIN RD PHASE 2

TRAFFIC CONTROL PLAN PHASE 2 STEP 1

SHEET 17 OF 19

DGN:	STATE	PROJECT NO.	ROADWAY
CHK DGN:	TEXAS	NB 18-026	KLEIN RD
DWG:	COUNTY	CITY	SHEET NO.
CHK DWG:	GUADALUPE	NEW BRAUNFELS	67

ITEM	DESCRIPTION	UNIT	QTY
0508-6001	CONSTRUCTING DETOURS	SY	16
0512-6009	PORT CTB (FUR & INST)(LOW PROF)(TY 1)	LF	94
0512-6010	PORT CTB (FUR & INST)(LOW PROF)(TY 2)	LF	60
0512-6057	PORT CTB (REMOVE)(LOW PROF)(TY 1)	LF	94
0512-6058	PORT CTB (REMOVE)(LOW PROF)(TY 2)	LF	60
0662-6004	WK ZN PAV MRK NON-REMOV (W)4"(SLD)	LF	600
0662-6034	WK ZN PAV MRK NON-REMOV (Y)4"(SLD)	LF	600
0677-6001	ELIM EXT PAV MRK & MRKS (4")	LF	1000
0677-6007	ELIM EXT PAV MRK & MRKS (24")	LF	120
0677-6008	ELIM EXT PAV MRK & MRKS (ARROW)	EA	
0677-6012	ELIM EXT PAV MRK & MRKS (WORD)	EA	
0677-6020	ELIM EXT PAV MRK & MRKS (MED NOSE)	EA	

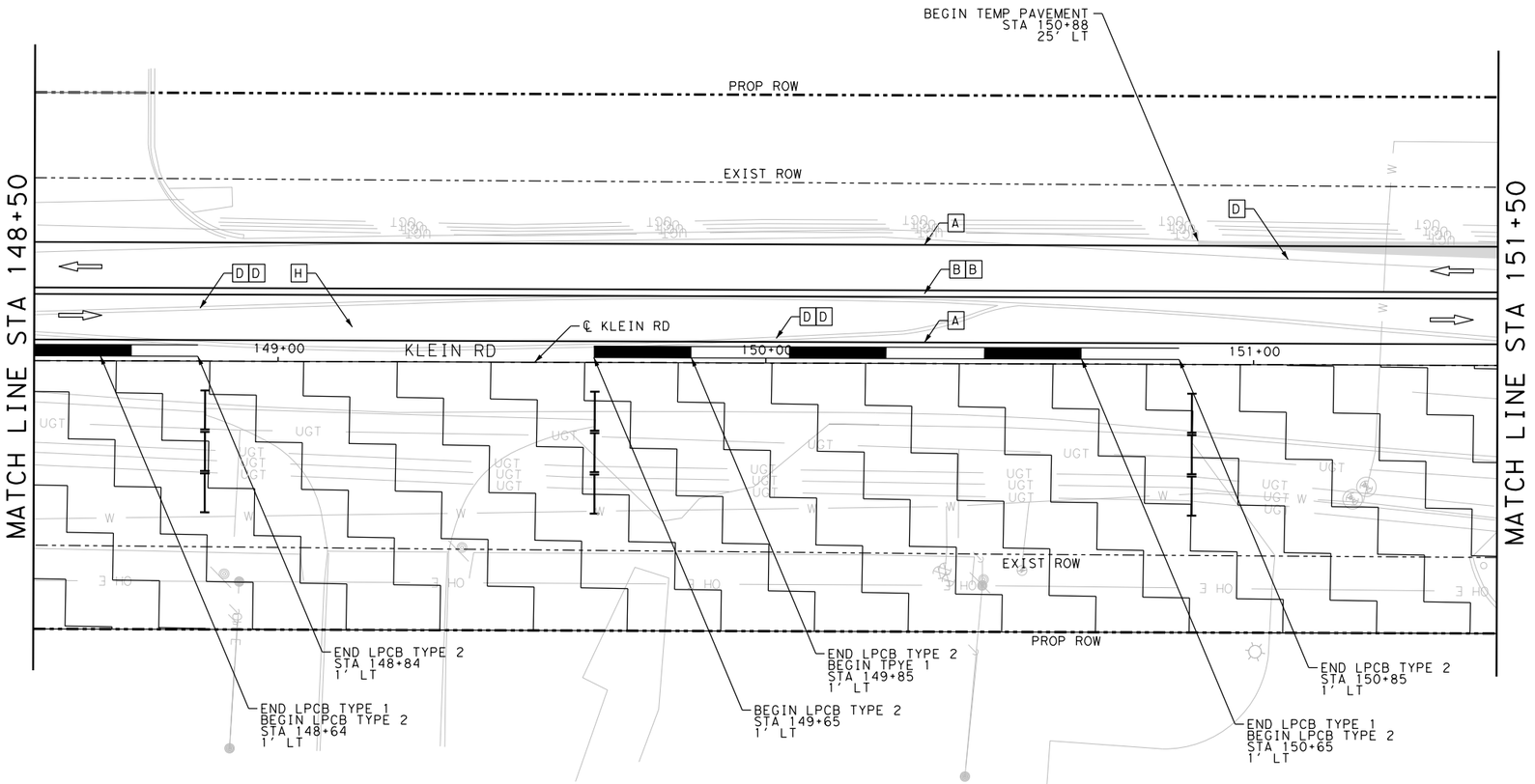

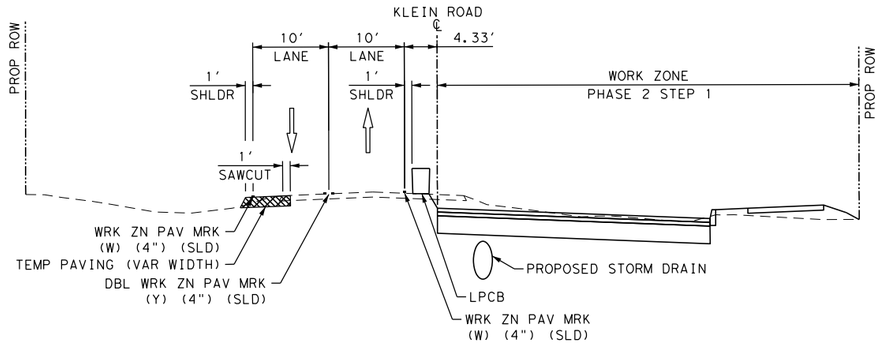

PHASE 2 STEP 1

N.T.S.
146+00 TO END

LEGEND

- SIGN
- TYPE III BARRICADE
- TRAFFIC FLOW ARROWS
- TEMPORARY PAVEMENT
- CONSTRUCTION PHASE
- PLASTIC DRUM
- LOW PROFILE CONCRETE BARRIER TYPE 1 AND TYPE 2

A	NON-REMOV (W)4"(SLD)	G	ELIM (8")
B	NON-REMOV (Y)4"(SLD)	H	ELIM (24")
C	NON-REMOV (W)24"(SLD)	I	ELIM (MED NOSE)
D	ELIM (4")	J	REMOV (W)4"(SLD)
E	ELIM (ARROW)	K	REMOV (Y)4"(SLD)
F	ELIM (WORD)	L	REMOV (W)8"(SLD)

DESIGN

INTERIM REVIEW

DOCUMENT INCOMPLETE. NOT INTENDED FOR PERMIT, BIDDING OR CONSTRUCTION.
ENGINEER: JAKE BOEKAMP
P.E. SERIAL NO: 129661
DATE: 1/9/2020

APPROVAL

INTERIM REVIEW

DOCUMENT INCOMPLETE. NOT INTENDED FOR PERMIT, BIDDING OR CONSTRUCTION.
ENGINEER: JOHN A. TYLER
P.E. SERIAL NO: 105193
DATE: 1/9/2020

0 10 20 30 60

SCALE: PLAN 1"= 30'

REV. NO.	DATE	DESCRIPTION	BY

PAPE-DAWSON ENGINEERS
SAN ANTONIO | AUSTIN | HOUSTON | FORT WORTH | DALLAS
2000 NW LOOP 410 | SAN ANTONIO, TX 78213 | 210.375.9000
TBPE FIRM REGISTRATION #470 | TBPLS FIRM REGISTRATION #10028800

City of New Braunfels

KLEIN RD PHASE 2

TRAFFIC CONTROL PLAN PHASE 2 STEP 1

SHEET 18 OF 19

DGN:	STATE	PROJECT NO.	ROADWAY
CHK DGN:	TEXAS	NB 18-026	KLEIN RD
DWG:	COUNTY	CITY	SHEET NO.
CHK DWG:	GUADALUPE	NEW BRAUNFELS	68

Plotted on: 1/9/2020

Design Filename: H:\Projects\510\30\03\Design\Civil\TCP\Phase1\5103003tcp218.dgn

Plotted on: 1/9/2020

Design Filename: H:\Projects\510\30\03\Design\Civil\TCP\Phase1\5103003tcp219.dgn

ITEM	DESCRIPTION	UNIT	QTY
0508-6001	CONSTRUCTING DETOURS	SY	53
0512-6009	PORT CTB (FUR & INST)(LOW PROF)(TY 1)	LF	60
0512-6010	PORT CTB (FUR & INST)(LOW PROF)(TY 2)	LF	40
0512-6057	PORT CTB (REMOVE)(LOW PROF)(TY 1)	LF	60
0512-6058	PORT CTB (REMOVE)(LOW PROF)(TY 2)	LF	40
0662-6004	WK ZN PAV MRK NON-REMOV (W)4"(SLD)	LF	253
0662-6016	WK ZN PAV MRK NON-REMOV (W)24"(SLD)	LF	10
0662-6034	WK ZN PAV MRK NON-REMOV (Y)4"(SLD)	LF	253
0677-6001	ELIM EXT PAV MRK & MRKS (4")	LF	170

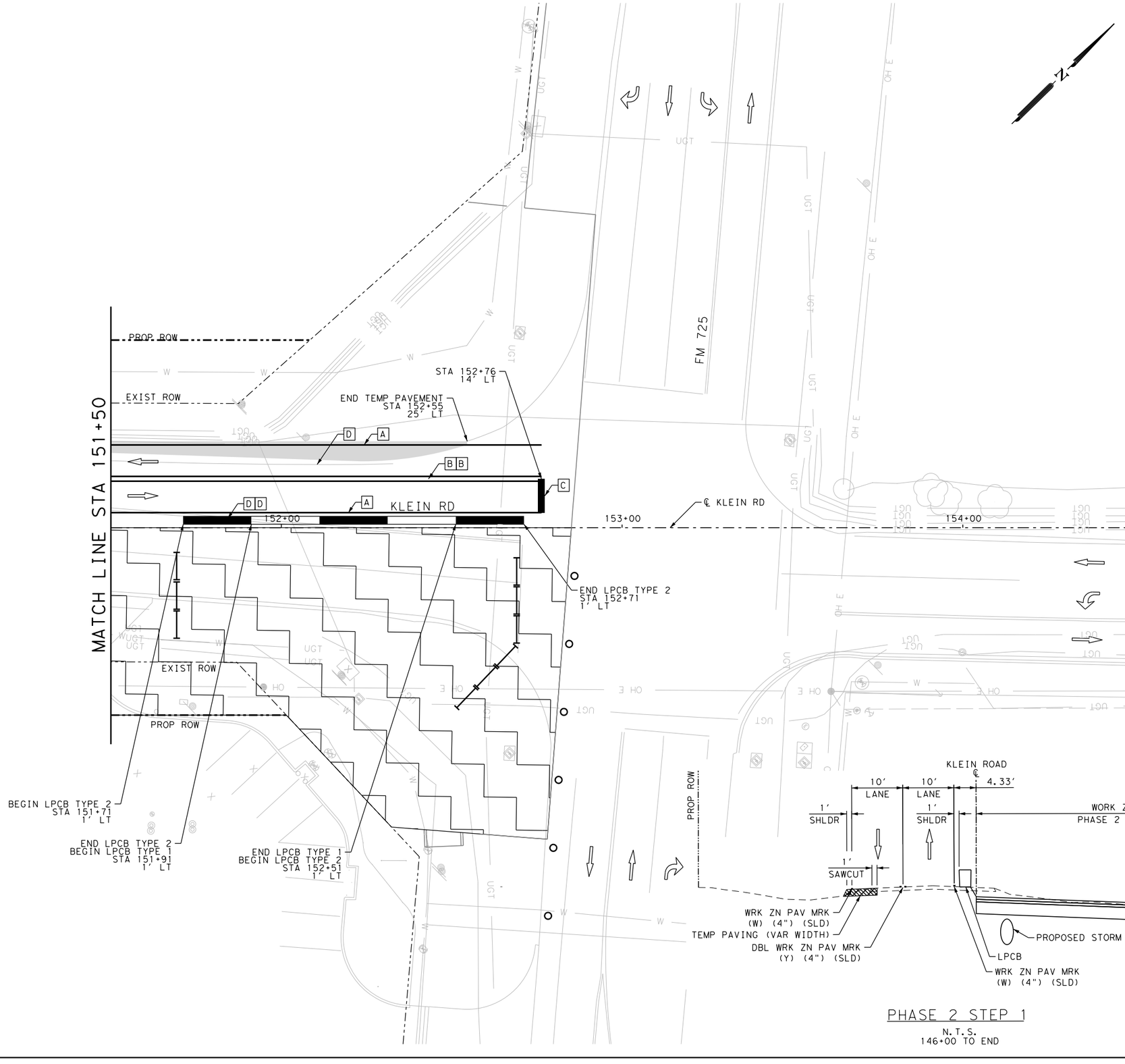

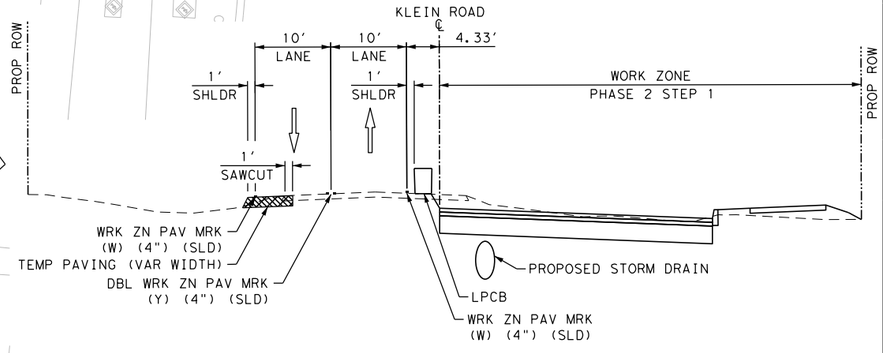

PHASE 2 STEP 1

N.T.S.

146+00 TO END

LEGEND

- SIGN
- TYPE III BARRICADE
- TRAFFIC FLOW ARROWS
- TEMPORARY PAVEMENT
- CONSTRUCTION PHASE
- PLASTIC DRUM
- LOW PROFILE CONCRETE BARRIER TYPE 1 AND TYPE 2

A	NON-REMOV (W)4"(SLD)	G	ELIM (8")
B	NON-REMOV (Y)4"(SLD)	H	ELIM (24")
C	NON-REMOV (W)24"(SLD)	I	ELIM (MED NOSE)
D	ELIM (4")	J	REMOV (W)4"(SLD)
E	ELIM (ARROW)	K	REMOV (Y)4"(SLD)
F	ELIM (WORD)	L	REMOV (W)8"(SLD)

DESIGN

INTERIM REVIEW

DOCUMENT INCOMPLETE. NOT INTENDED FOR PERMIT, BIDDING OR CONSTRUCTION.
ENGINEER: JAKE BOEKAMP
P.E. SERIAL NO: 129661
DATE: 1/9/2020

APPROVAL

INTERIM REVIEW

DOCUMENT INCOMPLETE. NOT INTENDED FOR PERMIT, BIDDING OR CONSTRUCTION.
ENGINEER: JOHN A. TYLER
P.E. SERIAL NO: 105193
DATE: 1/9/2020

0 10 20 30 60

SCALE: PLAN 1" = 30'

REV. NO.	DATE	DESCRIPTION	BY

PAPE-DAWSON ENGINEERS
SAN ANTONIO | AUSTIN | HOUSTON | FORT WORTH | DALLAS
2000 NW LOOP 410 | SAN ANTONIO, TX 78213 | 210.375.9000
TBPE FIRM REGISTRATION #470 | TBPLS FIRM REGISTRATION #10028800

City of New Braunfels

KLEIN RD PHASE 2

TRAFFIC CONTROL PLAN PHASE 2 STEP 1

SHEET 19 OF 19

DGN:	STATE	PROJECT NO.	ROADWAY
CHK DGN:	TEXAS	NB 18-026	KLEIN RD
DWG:	COUNTY	CITY	SHEET NO.
CHK DWG:	GUADALUPE	NEW BRAUNFELS	69

ITEM	DESCRIPTION	UNIT	QTY
0662-6063	WK ZN PAV MRK REMOV (W)4"(SLD)	LF	171
0662-6071	WK ZN PAV MRK REMOV (W)8"(SLD)	LF	173
0662-6095	WK ZN PAV MRK REMOV (Y)4"(SLD)	LF	331
0677-6001	ELIM EXT PAV MRK & MRKS (4")	LF	
0677-6003	ELIM EXT PAV MRK & MRKS (8")	LF	165

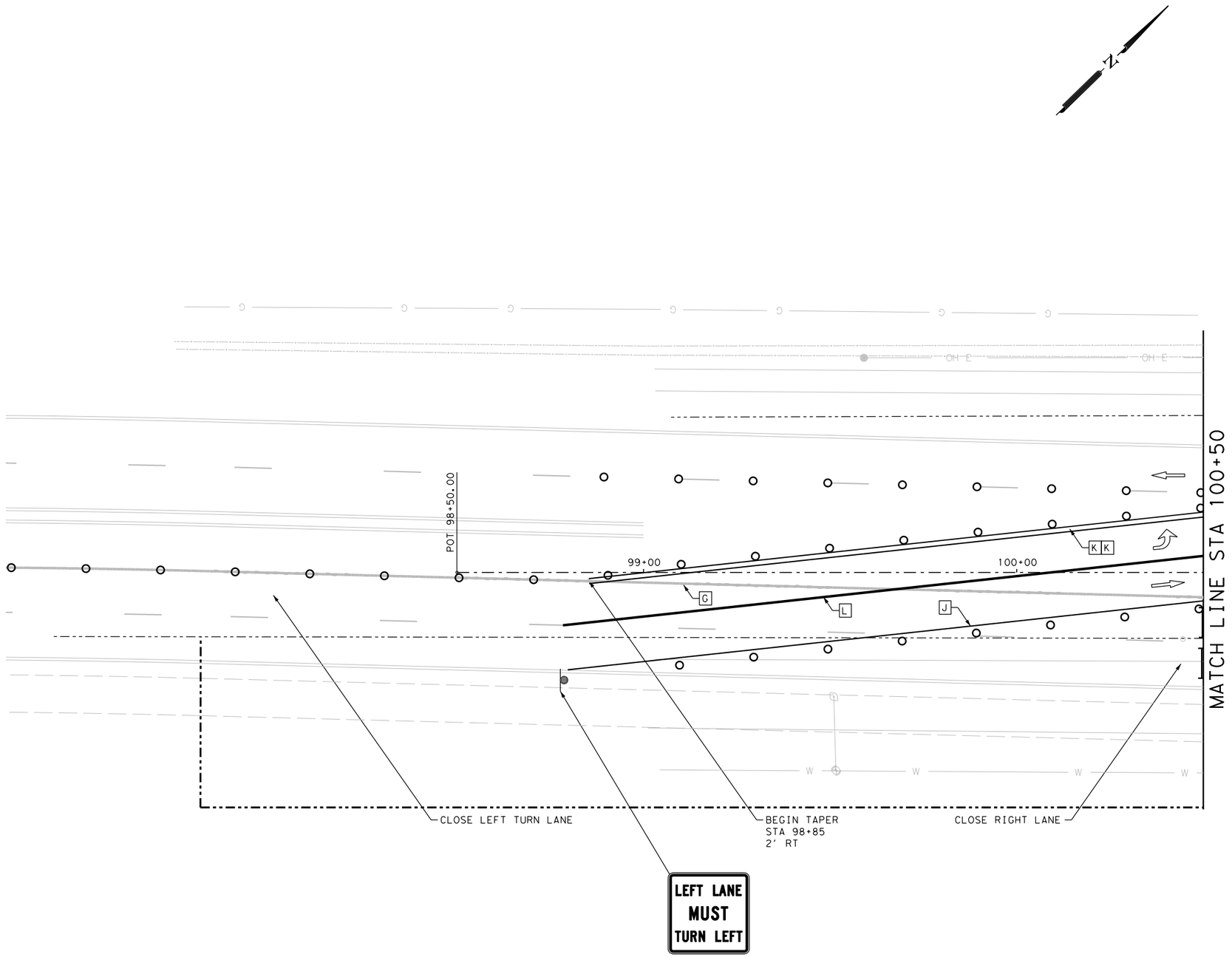

LEGEND

- SIGN
- TYPE III BARRICADE
- TRAFFIC FLOW ARROWS
- TEMPORARY PAVEMENT
- CONSTRUCTION PHASE
- PLASTIC DRUM
- LOW PROFILE CONCRETE BARRIER TYPE 1 AND TYPE 2

A	NON-REMOV (W)4"(SLD)	G	ELIM (8")
B	NON-REMOV (Y)4"(SLD)	H	ELIM (24")
C	NON-REMOV (W)24"(SLD)	I	ELIM (MED NOSE)
D	ELIM (4")	J	REMOV (W)4"(SLD)
E	ELIM (ARROW)	K	REMOV (Y)4"(SLD)
F	ELIM (WORD)	L	REMOV (W)8"(SLD)

DESIGN

INTERIM REVIEW

DOCUMENT INCOMPLETE. NOT INTENDED FOR PERMIT, BIDDING OR CONSTRUCTION.
ENGINEER: JAKE BOEKAMP
P.E. SERIAL NO: 129661
DATE: 1/9/2020

APPROVAL

INTERIM REVIEW

DOCUMENT INCOMPLETE. NOT INTENDED FOR PERMIT, BIDDING OR CONSTRUCTION.
ENGINEER: JOHN A. TYLER
P.E. SERIAL NO: 105193
DATE: 1/9/2020

0 10 20 30 60

SCALE: PLAN 1"= 30'

REV. NO.	DATE	DESCRIPTION	BY

PAPE-DAWSON ENGINEERS
SAN ANTONIO | AUSTIN | HOUSTON | FORT WORTH | DALLAS
2000 NW LOOP 410 | SAN ANTONIO, TX 78213 | 210.375.9000
TBPE FIRM REGISTRATION #470 | TBPLS FIRM REGISTRATION #10028800

City of New Braunfels

KLEIN RD PHASE 2

TRAFFIC CONTROL PLAN PHASE 2 STEP 2

SHEET 1 OF 19

DGN:	STATE	PROJECT NO.	ROADWAY
CHK DGN:	TEXAS	NB 18-026	KLEIN RD
DWG:	COUNTY	CITY	SHEET NO.
CHK DWG:	GUADALUPE	NEW BRAUNFELS	70

NOTES:

1. FOR ADDITIONAL DETAILS SEE TxDOT TCP STANDARD SHEETS.
2. EXISTING FEATURES ARE SHOWN SCREENED BACK.
3. EXISTING PAVEMENT MARKINGS CONFLICTING WITH WORK ZONE PAVEMENT MARKINGS SHALL BE REMOVED.
4. MAINTAIN 30' TURNING RADII AT INTERSECTION DURING CONSTRUCTION.
5. ACCESS TO ADJOINING PROPERTIES MUST BE MAINTAINED AT ALL TIMES.
6. SEE TxDOT BARRICADE AND CONSTUCTION CHANNELIZING DEVICES STANDARDS BC (9) 14 FOR BARREL SPACING.

Plotted on: 1/9/2020

Design Filename: H:\Projects\510\30\03\Design\Civil\TCP\Phase1\5103003tcp2a01.dgn

ITEM	DESCRIPTION	UNIT	QTY
0662-6063	WK ZN PAV MRK REMOV (W)4"(SLD)	LF	301
0662-6071	WK ZN PAV MRK REMOV (W)8"(SLD)	LF	208
0662-6095	WK ZN PAV MRK REMOV (Y)4"(SLD)	LF	627
0677-6001	ELIM EXT PAV MRK & MRKS (4")	LF	30
0677-6003	ELIM EXT PAV MRK & MRKS (8")	LF	85

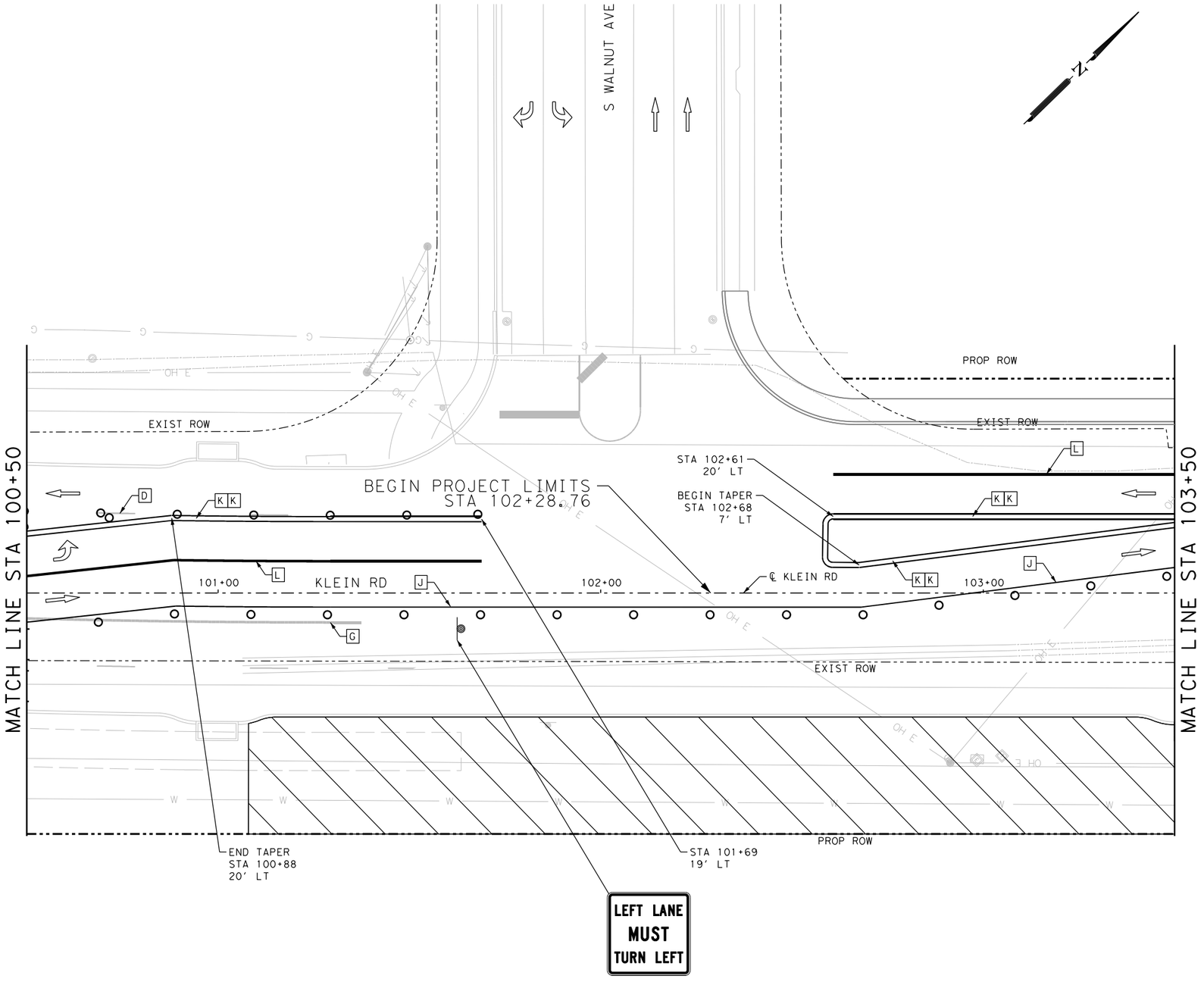

LEGEND

- SIGN
- TYPE III BARRICADE
- TRAFFIC FLOW ARROWS
- TEMPORARY PAVEMENT
- CONSTRUCTION PHASE
- PLASTIC DRUM
- LOW PROFILE CONCRETE BARRIER TYPE 1 AND TYPE 2

A	NON-REMOV (W)4"(SLD)	G	ELIM (8")
B	NON-REMOV (Y)4"(SLD)	H	ELIM (24")
C	NON-REMOV (W)24"(SLD)	I	ELIM (MED NOSE)
D	ELIM (4")	J	REMOV (W)4"(SLD)
E	ELIM (ARROW)	K	REMOV (Y)4"(SLD)
F	ELIM (WORD)	L	REMOV (W)8"(SLD)

DESIGN

INTERIM REVIEW
DOCUMENT INCOMPLETE. NOT INTENDED FOR PERMIT, BIDDING OR CONSTRUCTION.
ENGINEER: JAKE BOEKAMP
P.E. SERIAL NO: 129661
DATE: 1/9/2020

APPROVAL

INTERIM REVIEW
DOCUMENT INCOMPLETE. NOT INTENDED FOR PERMIT, BIDDING OR CONSTRUCTION.
ENGINEER: JOHN A. TYLER
P.E. SERIAL NO: 105193
DATE: 1/9/2020

0 10 20 30 60

SCALE: PLAN 1"= 30'

REV.NO.	DATE	DESCRIPTION	BY

PAPE-DAWSON ENGINEERS
SAN ANTONIO | AUSTIN | HOUSTON | FORT WORTH | DALLAS
2000 NW LOOP 410 | SAN ANTONIO, TX 78213 | 210.375.9000
TBPE FIRM REGISTRATION #470 | TBPLS FIRM REGISTRATION #10028800

City of New Braunfels

KLEIN RD PHASE 2

TRAFFIC CONTROL PLAN PHASE 2 STEP 2

SHEET 2 OF 19

DGN:	STATE	PROJECT NO.	ROADWAY
CHK DGN:	TEXAS	NB 18-026	KLEIN RD
DWG:	COUNTY	CITY	SHEET NO.
CHK DWG:	GUADALUPE	NEW BRAUNFELS	71

Plotted on: 1/9/2020

Design Filename: H:\Projects\510\30\03\Design\Civil\TCP\PhaseII\5103003tcp2A02.dgn

ITEM	DESCRIPTION	UNIT	QTY
0662-6004	WK ZN PAV MRK NON-REMOV (W)4"(SLD)	LF	439
0662-6034	WK ZN PAV MRK NON-REMOV (Y)4"(SLD)	LF	634
0662-6071	WK ZN PAV MRK REMOV (W)8"(SLD)	LF	112

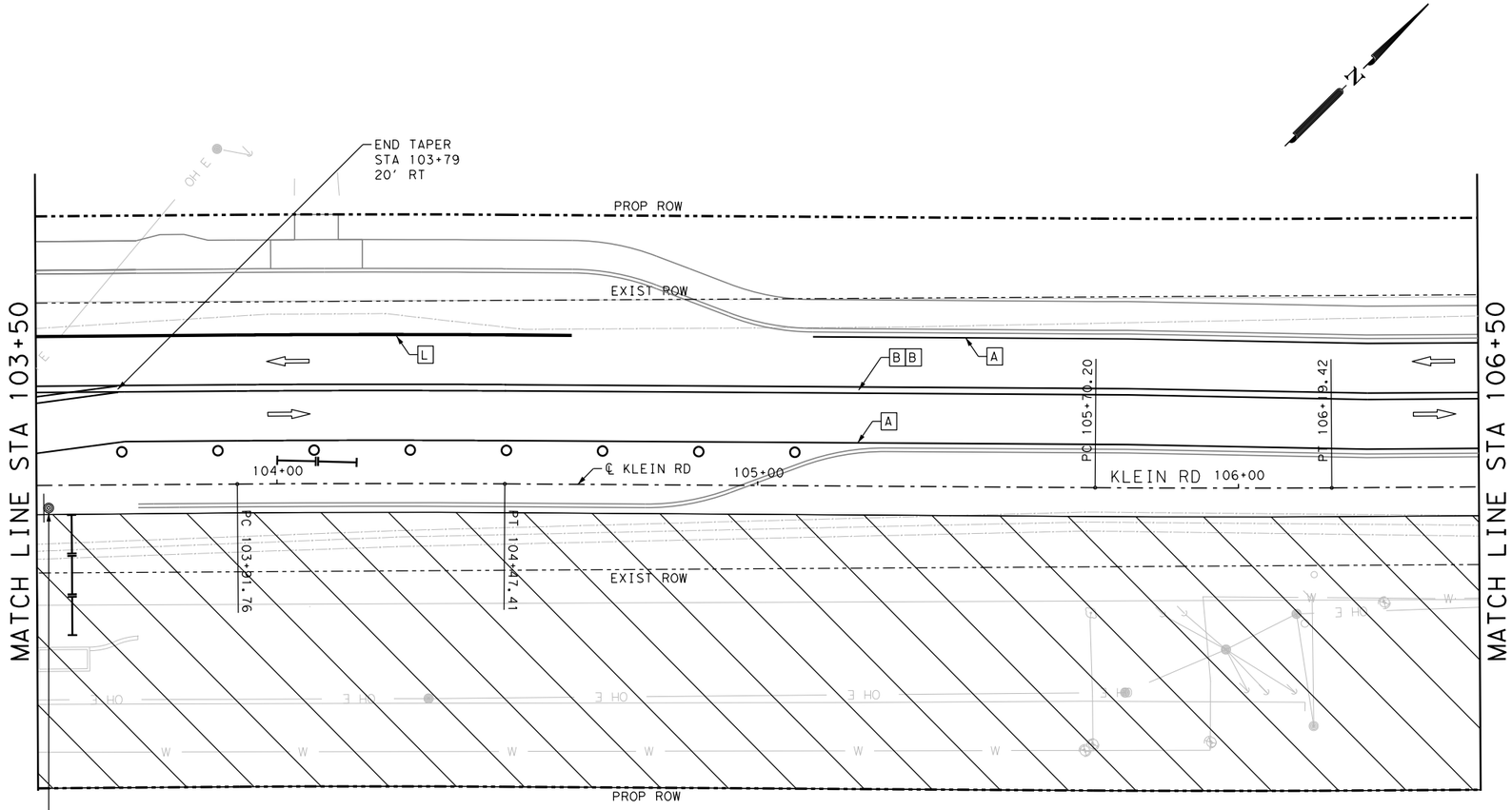

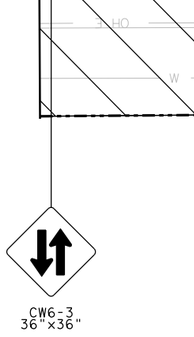

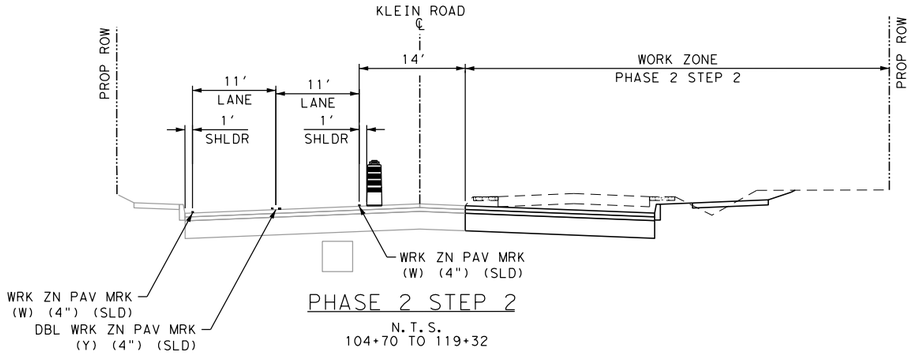

PHASE 2 STEP 2

N.T.S.
104+70 TO 119+32

LEGEND

- SIGN
- TYPE III BARRICADE
- TRAFFIC FLOW ARROWS
- TEMPORARY PAVEMENT
- CONSTRUCTION PHASE
- PLASTIC DRUM
- LOW PROFILE CONCRETE BARRIER TYPE 1 AND TYPE 2

A	NON-REMOV (W)4"(SLD)	G	ELIM (8")
B	NON-REMOV (Y)4"(SLD)	H	ELIM (24")
C	NON-REMOV (W)24"(SLD)	I	ELIM (MED NOSE)
D	ELIM (4")	J	REMOV (W)4"(SLD)
E	ELIM (ARROW)	K	REMOV (Y)4"(SLD)
F	ELIM (WORD)	L	REMOV (W)8"(SLD)

DESIGN

INTERIM REVIEW

DOCUMENT INCOMPLETE. NOT INTENDED FOR PERMIT, BIDDING OR CONSTRUCTION.
ENGINEER: JAKE BOEKAMP
P.E. SERIAL NO: 129661
DATE: 1/9/2020

APPROVAL

INTERIM REVIEW

DOCUMENT INCOMPLETE. NOT INTENDED FOR PERMIT, BIDDING OR CONSTRUCTION.
ENGINEER: JOHN A. TYLER
P.E. SERIAL NO: 105193
DATE: 1/9/2020

0 10 20 30 60

SCALE: PLAN 1"= 30'

REV. NO.	DATE	DESCRIPTION	BY

PAPE-DAWSON ENGINEERS
SAN ANTONIO | AUSTIN | HOUSTON | FORT WORTH | DALLAS
2000 NW LOOP 410 | SAN ANTONIO, TX 78213 | 210.375.9000
TBPE FIRM REGISTRATION #470 | TBPLS FIRM REGISTRATION #10028800

City of New Braunfels

KLEIN RD PHASE 2

TRAFFIC CONTROL PLAN PHASE 2 STEP 2

SHEET 3 OF 19

DGN:	STATE	PROJECT NO.	ROADWAY
CHK DGN:	TEXAS	NB 18-026	KLEIN RD
DWG:	COUNTY	CITY	SHEET NO.
CHK DWG:	GUADALUPE	NEW BRAUNFELS	72

Plotted on: 1/9/2020

Design Filename: H:\Projects\510\30\03\Design\Civil\TCP\PhaseII\5103003tcp2A03.dgn

Plotted on: 1/9/2020

Design Filename: H:\Projects\510\30\03\Design\Civil\TCP\PhaseII\5103003tcp2404.dgn

ITEM	DESCRIPTION	UNIT	QTY
0662-6004	WK ZN PAV MRK NON-REMOV (W)4"(SLD)	LF	600
0662-6034	WK ZN PAV MRK NON-REMOV (Y)4"(SLD)	LF	600

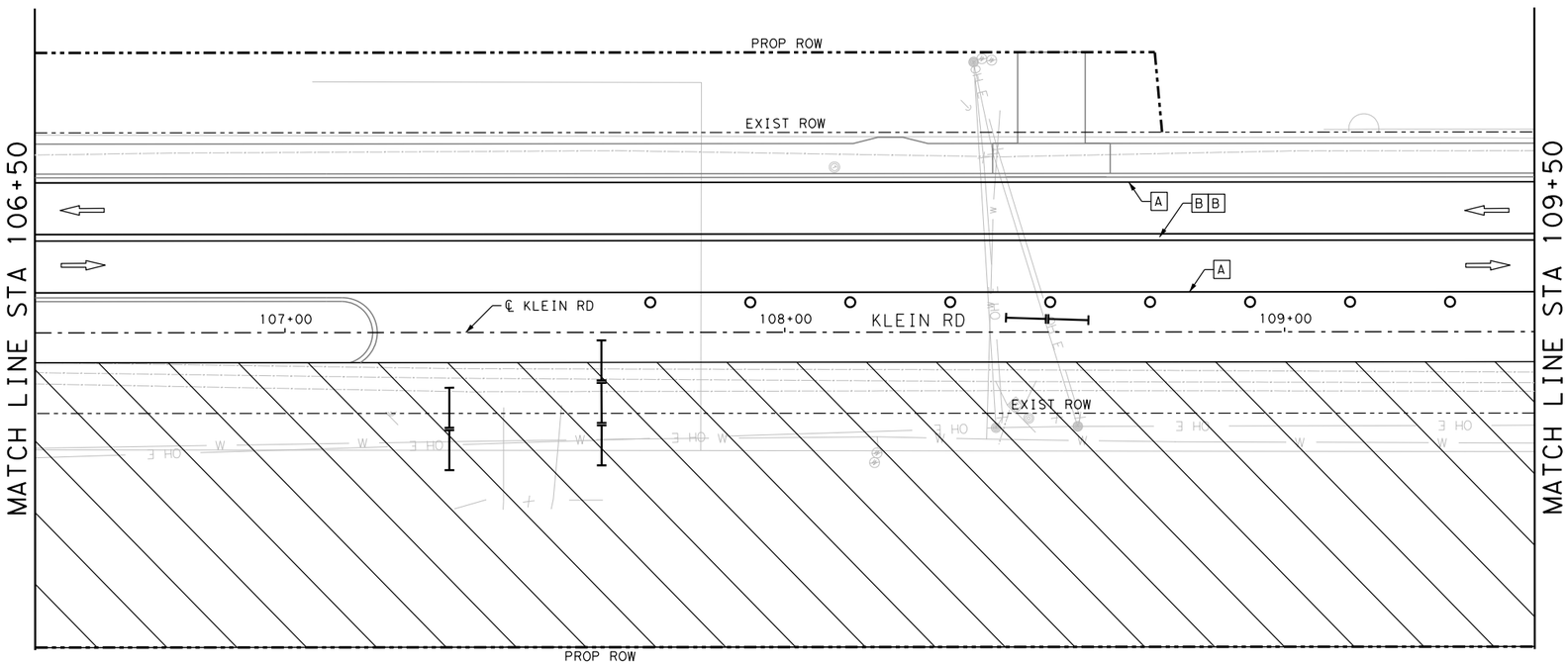

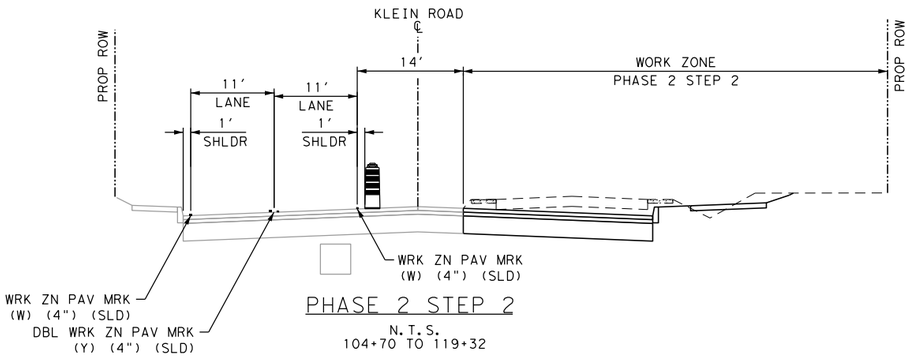

PHASE 2 STEP 2

N.T.S.
104+70 TO 119+32

LEGEND

- SIGN
- TYPE III BARRICADE
- TRAFFIC FLOW ARROWS
- TEMPORARY PAVEMENT
- CONSTRUCTION PHASE
- PLASTIC DRUM
- LOW PROFILE CONCRETE BARRIER TYPE 1 AND TYPE 2

A	NON-REMOV (W)4"(SLD)	G	ELIM (8")
B	NON-REMOV (Y)4"(SLD)	H	ELIM (24")
C	NON-REMOV (W)24"(SLD)	I	ELIM (MED NOSE)
D	ELIM (4")	J	REMOV (W)4"(SLD)
E	ELIM (ARROW)	K	REMOV (Y)4"(SLD)
F	ELIM (WORD)	L	REMOV (W)8"(SLD)

DESIGN

INTERIM REVIEW
DOCUMENT INCOMPLETE. NOT INTENDED FOR PERMIT, BIDDING OR CONSTRUCTION.
ENGINEER: JAKE BOEKAMP
P.E. SERIAL NO: 129661
DATE: 1/9/2020

APPROVAL

INTERIM REVIEW
DOCUMENT INCOMPLETE. NOT INTENDED FOR PERMIT, BIDDING OR CONSTRUCTION.
ENGINEER: JOHN A. TYLER
P.E. SERIAL NO: 105193
DATE: 1/9/2020

0 10 20 30 60

SCALE: PLAN 1"= 30′

REV. NO.	DATE	DESCRIPTION	BY

PAPE-DAWSON ENGINEERS
SAN ANTONIO | AUSTIN | HOUSTON | FORT WORTH | DALLAS
2000 NW LOOP 410 | SAN ANTONIO, TX 78213 | 210.375.9000
TBPE FIRM REGISTRATION #470 | TBPLS FIRM REGISTRATION #10028800

City of New Braunfels

KLEIN RD PHASE 2

TRAFFIC CONTROL PLAN PHASE 2 STEP 2

SHEET 4 OF 19

DGN:	STATE	PROJECT NO.	ROADWAY
CHK DGN:	TEXAS	NB 18-026	KLEIN RD
DWG:	COUNTY	CITY	SHEET NO.
CHK DWG:	GUADALUPE	NEW BRAUNFELS	73

Plotted on: 1/9/2020

Design Filename: H:\Projects\510\30\03\Design\Civil\TCP\PhaseII\5103003tcp2A05.dgn

ITEM	DESCRIPTION	UNIT	QTY
0662-6004	WK ZN PAV MRK NON-REMOV (W)4"(SLD)	LF	600
0662-6034	WK ZN PAV MRK NON-REMOV (Y)4"(SLD)	LF	600

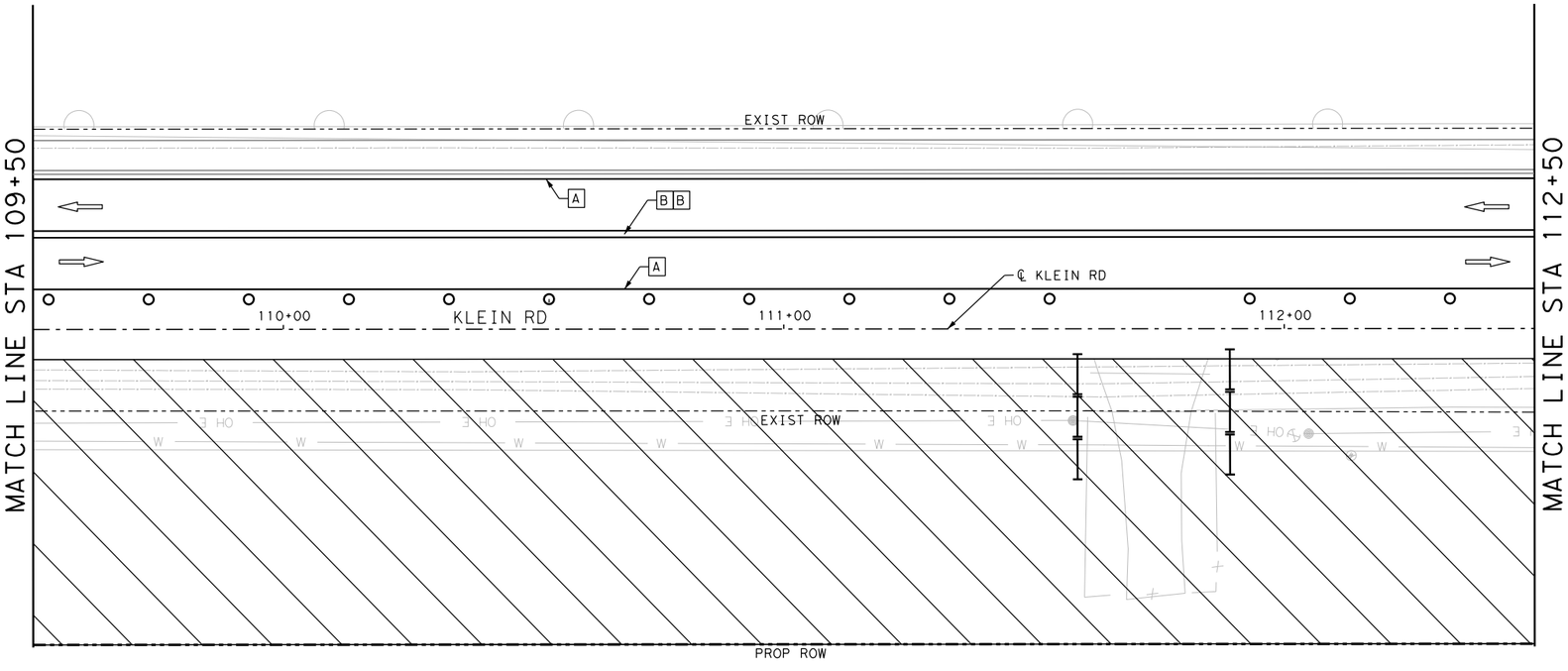

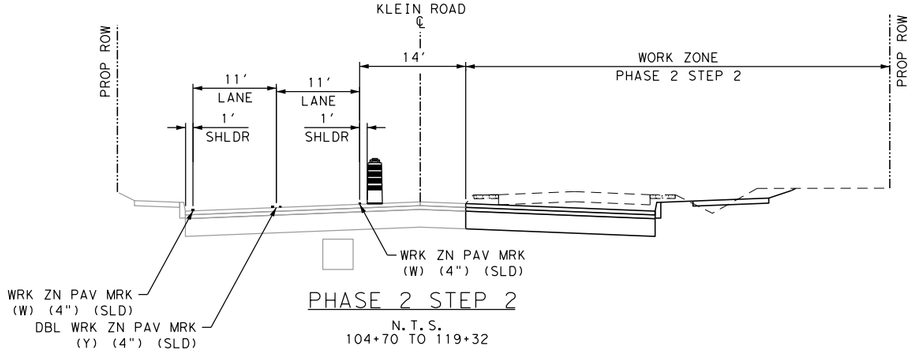

PHASE 2 STEP 2

N.T.S.
104+70 TO 119+32

LEGEND

- SIGN
- TYPE III BARRICADE
- TRAFFIC FLOW ARROWS
- TEMPORARY PAVEMENT
- CONSTRUCTION PHASE
- PLASTIC DRUM
- LOW PROFILE CONCRETE BARRIER TYPE 1 AND TYPE 2

A	NON-REMOV (W)4"(SLD)	G	ELIM (8")
B	NON-REMOV (Y)4"(SLD)	H	ELIM (24")
C	NON-REMOV (W)24"(SLD)	I	ELIM (MED NOSE)
D	ELIM (4")	J	REMOV (W)4"(SLD)
E	ELIM (ARROW)	K	REMOV (Y)4"(SLD)
F	ELIM (WORD)	L	REMOV (W)8"(SLD)

DESIGN

INTERIM REVIEW

DOCUMENT INCOMPLETE. NOT INTENDED FOR PERMIT, BIDDING OR CONSTRUCTION.
ENGINEER: JAKE BOEKAMP
P.E. SERIAL NO: 129661
DATE: 1/9/2020

APPROVAL

INTERIM REVIEW

DOCUMENT INCOMPLETE. NOT INTENDED FOR PERMIT, BIDDING OR CONSTRUCTION.
ENGINEER: JOHN A. TYLER
P.E. SERIAL NO: 105193
DATE: 1/9/2020

0 10 20 30 60

SCALE: PLAN 1" = 30'

REV. NO.	DATE	DESCRIPTION	BY

PAPE-DAWSON ENGINEERS
SAN ANTONIO | AUSTIN | HOUSTON | FORT WORTH | DALLAS
2000 NW LOOP 410 | SAN ANTONIO, TX 78213 | 210.375.9000
TBPE FIRM REGISTRATION #470 | TBPLS FIRM REGISTRATION #10028800

City of New Braunfels

KLEIN RD PHASE 2

TRAFFIC CONTROL PLAN PHASE 2 STEP 2

SHEET 5 OF 19

DGN:	STATE	PROJECT NO.	ROADWAY
CHK DGN:	TEXAS	NB 18-026	KLEIN RD
DWG:	COUNTY	CITY	SHEET NO.
CHK DWG:	GUADALUPE	NEW BRAUNFELS	74

Plotted on: 1/9/2020

Design Filename: H:\Projects\510\30\03\Design\Civil\TCP\PhaseII\5103003tcp2A06.dgn

ITEM	DESCRIPTION	UNIT	QTY
0662-6004	WK ZN PAV MRK NON-REMOV (W)4"(SLD)	LF	482
0662-6034	WK ZN PAV MRK NON-REMOV (Y)4"(SLD)	LF	364

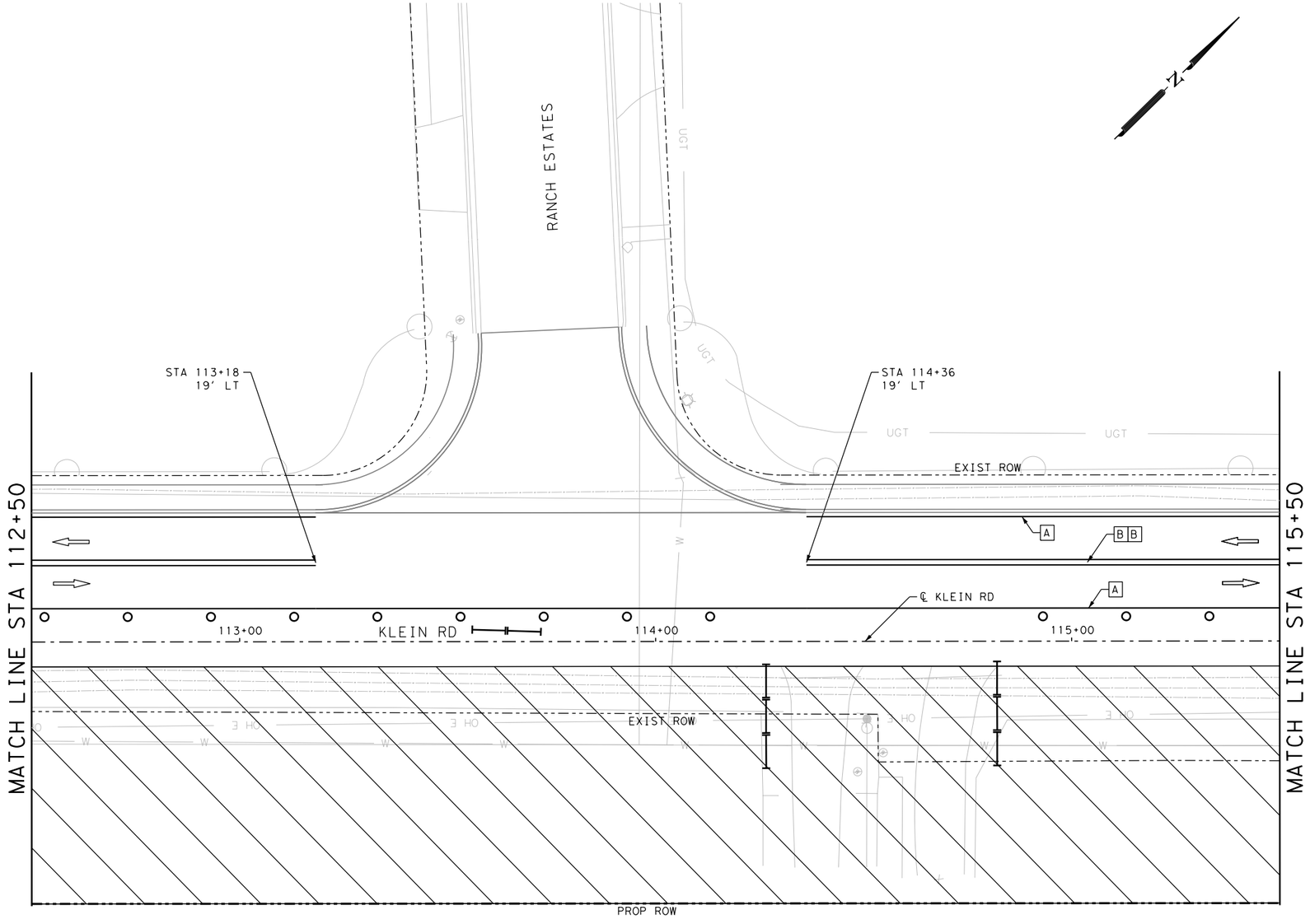

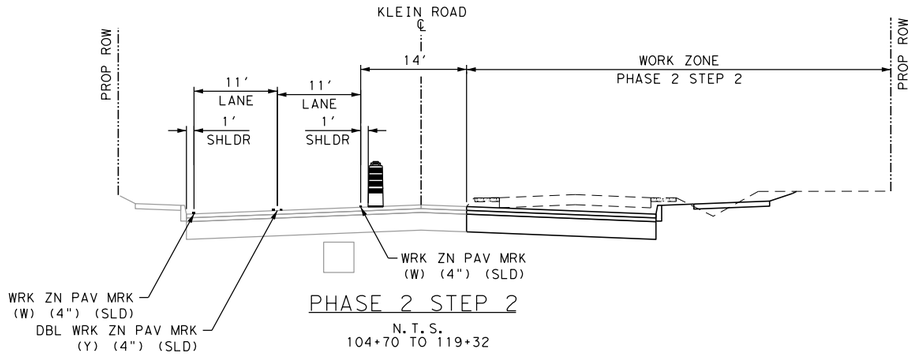

PHASE 2 STEP 2

N.T.S.

104+70 TO 119+32

LEGEND

- SIGN
- TYPE III BARRICADE
- TRAFFIC FLOW ARROWS
- TEMPORARY PAVEMENT
- CONSTRUCTION PHASE
- PLASTIC DRUM
- LOW PROFILE CONCRETE BARRIER TYPE 1 AND TYPE 2

A	NON-REMOV (W)4"(SLD)	G	ELIM (8")
B	NON-REMOV (Y)4"(SLD)	H	ELIM (24")
C	NON-REMOV (W)24"(SLD)	I	ELIM (MED NOSE)
D	ELIM (4")	J	REMOV (W)4"(SLD)
E	ELIM (ARROW)	K	REMOV (Y)4"(SLD)
F	ELIM (WORD)	L	REMOV (W)8"(SLD)

DESIGN

INTERIM REVIEW

DOCUMENT INCOMPLETE. NOT INTENDED FOR PERMIT, BIDDING OR CONSTRUCTION.
ENGINEER: JAKE BOEKAMP
P.E. SERIAL NO: 129661
DATE: 1/9/2020

APPROVAL

INTERIM REVIEW

DOCUMENT INCOMPLETE. NOT INTENDED FOR PERMIT, BIDDING OR CONSTRUCTION.
ENGINEER: JOHN A. TYLER
P.E. SERIAL NO: 105193
DATE: 1/9/2020

0 10 20 30 60

SCALE: PLAN 1" = 30'

REV. NO.	DATE	DESCRIPTION	BY

PAPE-DAWSON ENGINEERS

SAN ANTONIO | AUSTIN | HOUSTON | FORT WORTH | DALLAS
2000 NW LOOP 410 | SAN ANTONIO, TX 78213 | 210.375.9000
TBPE FIRM REGISTRATION #470 | TBPLS FIRM REGISTRATION #10028800

City of New Braunfels

KLEIN RD PHASE 2

TRAFFIC CONTROL PLAN PHASE 2 STEP 2

SHEET 6 OF 19

DGN:	STATE	PROJECT NO.	ROADWAY
CHK DGN:	TEXAS	NB 18-026	KLEIN RD
DWG:	COUNTY	CITY	SHEET NO.
CHK DWG:	GUADALUPE	NEW BRAUNFELS	75

ITEM	DESCRIPTION	UNIT	QTY
0662-6004	WK ZN PAV MRK NON-REMOV (W)4"(SLD)	LF	600
0662-6034	WK ZN PAV MRK NON-REMOV (Y)4"(SLD)	LF	600

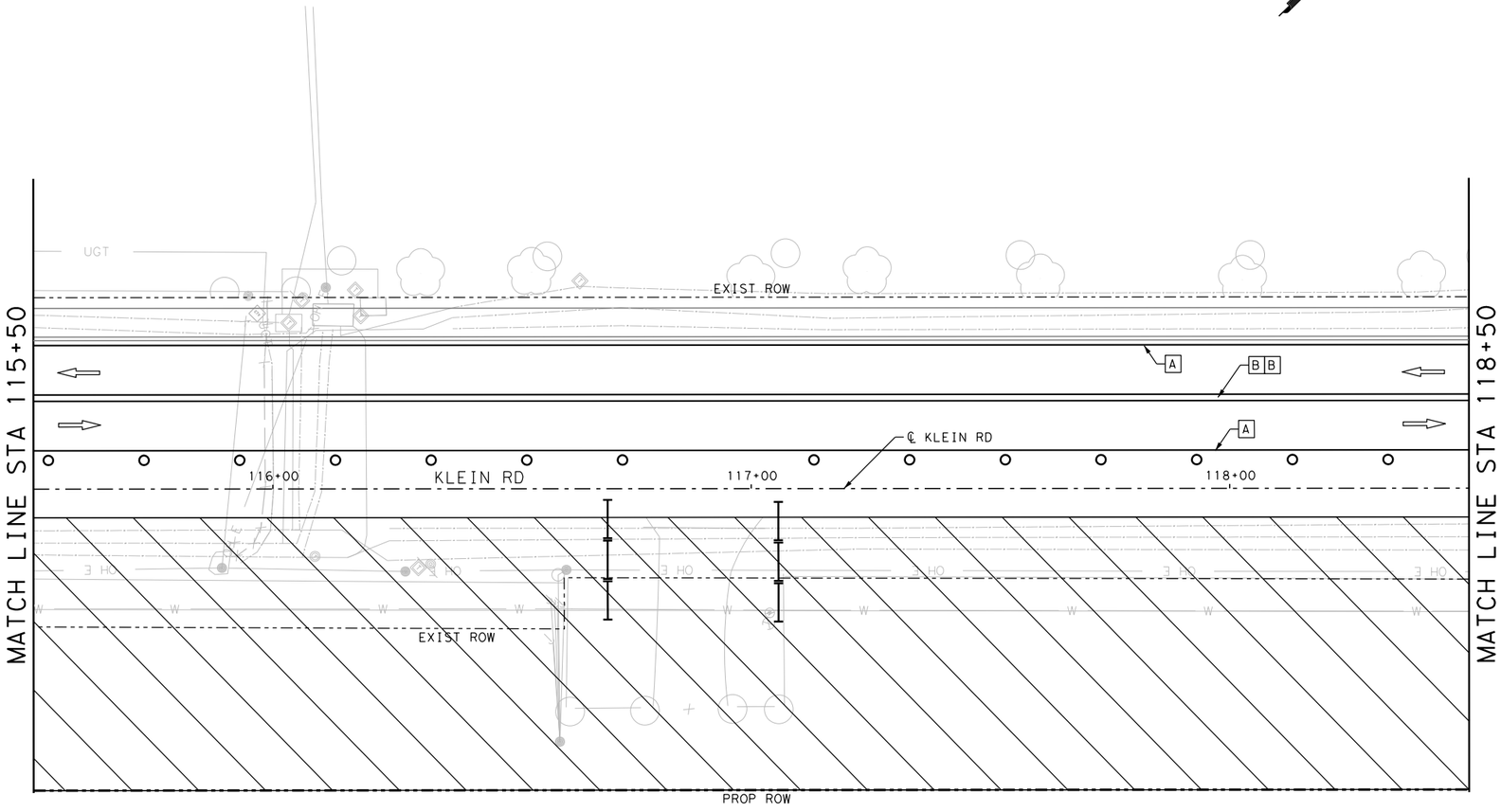

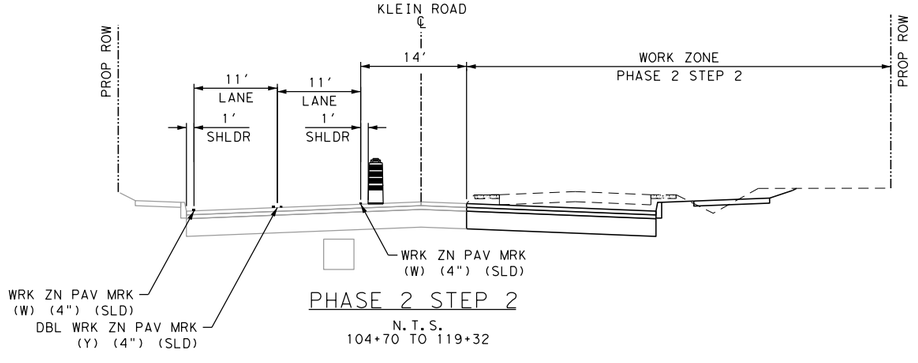

PHASE 2 STEP 2

N.T.S.

104+70 TO 119+32

LEGEND

- SIGN
- TYPE III BARRICADE
- TRAFFIC FLOW ARROWS
- TEMPORARY PAVEMENT
- CONSTRUCTION PHASE
- PLASTIC DRUM
- LOW PROFILE CONCRETE BARRIER TYPE 1 AND TYPE 2

A	NON-REMOV (W)4"(SLD)	G	ELIM (8")
B	NON-REMOV (Y)4"(SLD)	H	ELIM (24")
C	NON-REMOV (W)24"(SLD)	I	ELIM (MED NOSE)
D	ELIM (4")	J	REMOV (W)4"(SLD)
E	ELIM (ARROW)	K	REMOV (Y)4"(SLD)
F	ELIM (WORD)	L	REMOV (W)8"(SLD)

DESIGN

INTERIM REVIEW

DOCUMENT INCOMPLETE. NOT INTENDED FOR PERMIT, BIDDING OR CONSTRUCTION.

ENGINEER: JAKE BOEKAMP

P.E. SERIAL NO: 129661

DATE: 1/9/2020

APPROVAL

INTERIM REVIEW

DOCUMENT INCOMPLETE. NOT INTENDED FOR PERMIT, BIDDING OR CONSTRUCTION.

ENGINEER: JOHN A. TYLER

P.E. SERIAL NO: 105193

DATE: 1/9/2020

0 10 20 30 60

SCALE: PLAN 1" = 30'

REV. NO.	DATE	DESCRIPTION	BY

PAPE-DAWSON ENGINEERS

SAN ANTONIO | AUSTIN | HOUSTON | FORT WORTH | DALLAS

2000 NW LOOP 410 | SAN ANTONIO, TX 78213 | 210.375.9000

TBPE FIRM REGISTRATION #470 | TBPLS FIRM REGISTRATION #10028800

City of New Braunfels

KLEIN RD PHASE 2

TRAFFIC CONTROL PLAN PHASE 2 STEP 2

SHEET 7 OF 19

DGN:	STATE	PROJECT NO.	ROADWAY
CHK DGN:	TEXAS	NB 18-026	KLEIN RD
DWG:	COUNTY	CITY	SHEET NO.
CHK DWG:	GUADALUPE	NEW BRAUNFELS	76

Plotted on: 1/9/2020

Design Filename: H:\Projects\510\30\03\Design\Civil\TCP\Phase1\5103003tcp2A07.dgn

ITEM	DESCRIPTION	UNIT	QTY
0662-6004	WK ZN PAV MRK NON-REMOV (W)4"(SLD)	LF	508
0662-6034	WK ZN PAV MRK NON-REMOV (Y)4"(SLD)	LF	417

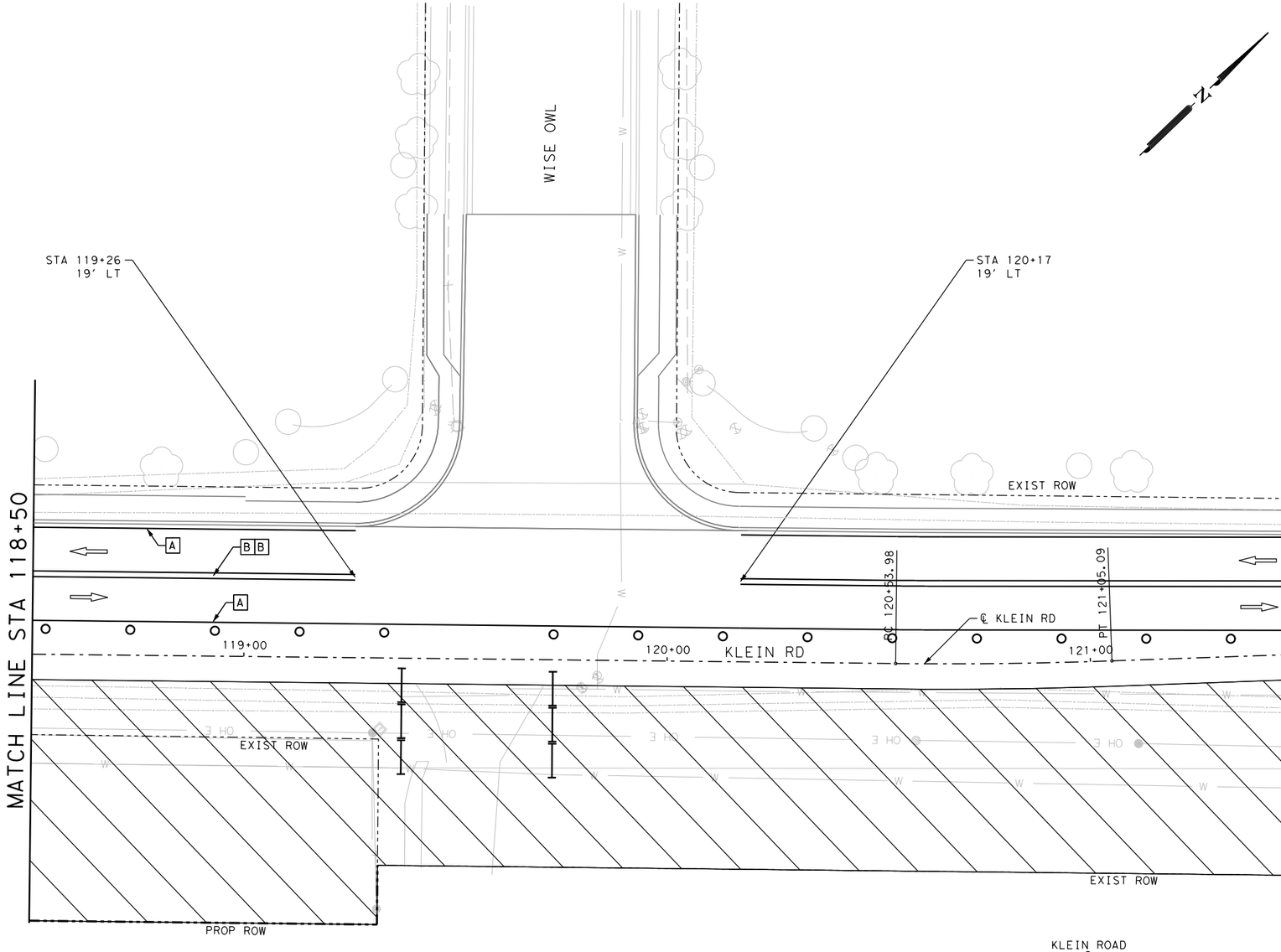

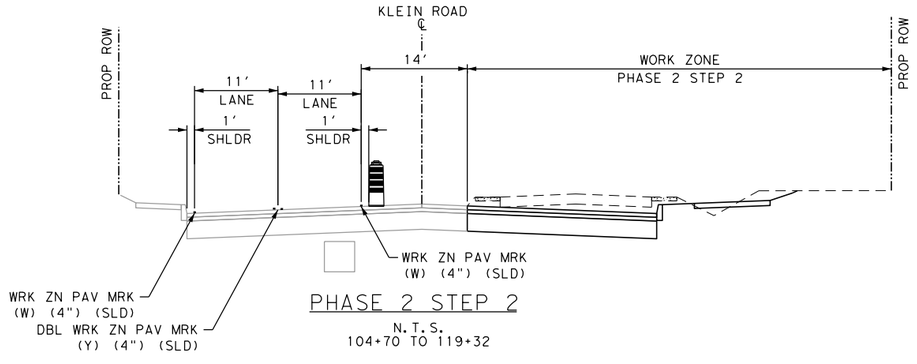

PHASE 2 STEP 2

N.T.S.

104+70 TO 119+32

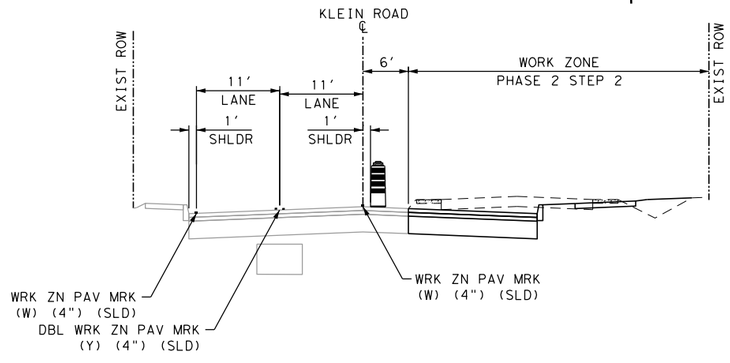

PHASE 2 STEP 2

N.T.S.

119+32 TO 133+65

LEGEND

- SIGN
- TYPE III BARRICADE
- TRAFFIC FLOW ARROWS
- TEMPORARY PAVEMENT
- CONSTRUCTION PHASE
- PLASTIC DRUM
- LOW PROFILE CONCRETE BARRIER TYPE 1 AND TYPE 2

A	NON-REMOV (W)4"(SLD)	G	ELIM (8")
B	NON-REMOV (Y)4"(SLD)	H	ELIM (24")
C	NON-REMOV (W)24"(SLD)	I	ELIM (MED NOSE)
D	ELIM (4")	J	REMOV (W)4"(SLD)
E	ELIM (ARROW)	K	REMOV (Y)4"(SLD)
F	ELIM (WORD)	L	REMOV (W)8"(SLD)

DESIGN

INTERIM REVIEW

DOCUMENT INCOMPLETE. NOT INTENDED FOR PERMIT, BIDDING OR CONSTRUCTION.
ENGINEER: JAKE BOEKAMP
P.E. SERIAL NO: 129661
DATE: 1/9/2020

APPROVAL

INTERIM REVIEW

DOCUMENT INCOMPLETE. NOT INTENDED FOR PERMIT, BIDDING OR CONSTRUCTION.
ENGINEER: JOHN A. TYLER
P.E. SERIAL NO: 105193
DATE: 1/9/2020

0 10 20 30 60

SCALE: PLAN 1"= 30'

REV. NO.	DATE	DESCRIPTION	BY

PAPE-DAWSON ENGINEERS
SAN ANTONIO | AUSTIN | HOUSTON | FORT WORTH | DALLAS
2000 NW LOOP 410 | SAN ANTONIO, TX 78213 | 210.375.9000
TBPE FIRM REGISTRATION #470 | TBPLS FIRM REGISTRATION #10028800

City of New Braunfels

KLEIN RD PHASE 2

TRAFFIC CONTROL PLAN PHASE 2 STEP 2

SHEET 8 OF 19

DGN:	STATE	PROJECT NO.	ROADWAY
CHK DGN:	TEXAS	NB 18-026	KLEIN RD
DWG:	COUNTY	CITY	SHEET NO.
CHK DWG:	GUADALUPE	NEW BRAUNFELS	77

Plotted on: 1/9/2020

Design Filename: H:\Projects\510\30\03\Design\Civil\TCP\PhaseII\5103003tcp2a08.dgn

Plotted on: 1/9/2020

Design Filename: H:\Projects\510\30\03\Design\Civil\TCP\PhaseII\5103003tcp2409.dgn

ITEM	DESCRIPTION	UNIT	QTY
0662-6004	WK ZN PAV MRK NON-REMOV (W)4"(SLD)	LF	519
0662-6034	WK ZN PAV MRK NON-REMOV (Y)4"(SLD)	LF	365

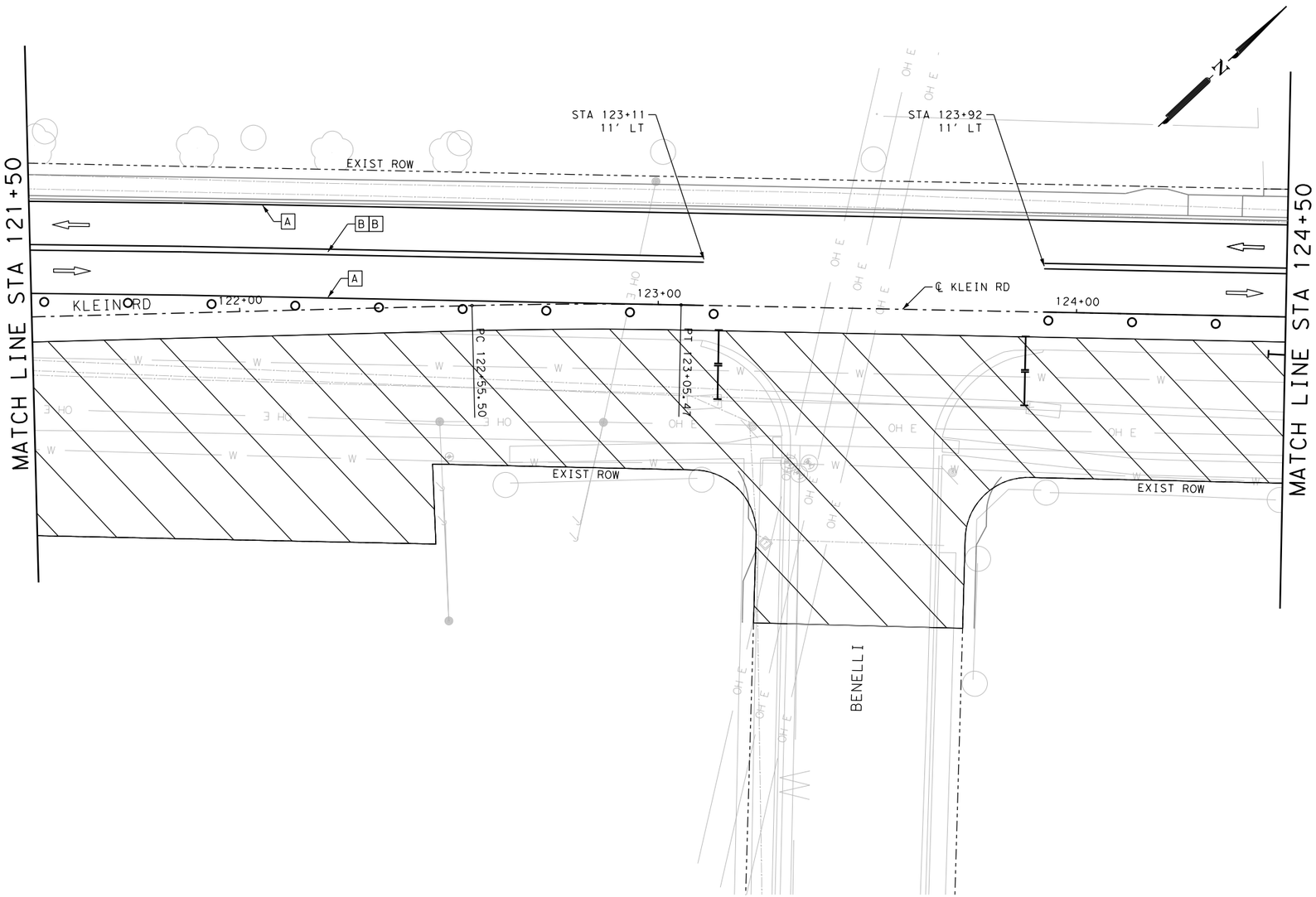

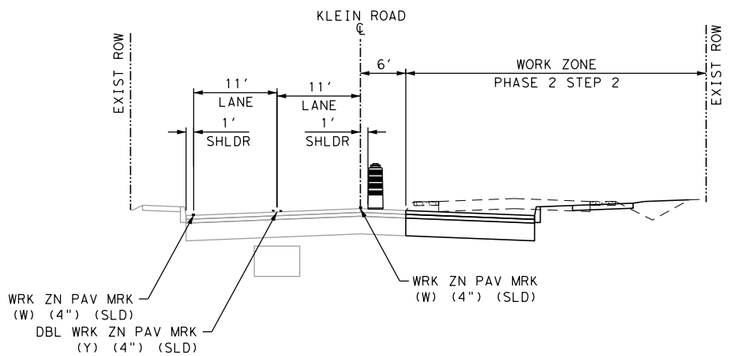

PHASE 2 STEP 2

N.T.S.
119+32 TO 133+65

LEGEND

- SIGN
- TYPE III BARRICADE
- TRAFFIC FLOW ARROWS
- TEMPORARY PAVEMENT
- CONSTRUCTION PHASE
- PLASTIC DRUM
- LOW PROFILE CONCRETE BARRIER TYPE 1 AND TYPE 2

A	NON-REMOV (W)4"(SLD)	G	ELIM (8")
B	NON-REMOV (Y)4"(SLD)	H	ELIM (24")
C	NON-REMOV (W)24"(SLD)	I	ELIM (MED NOSE)
D	ELIM (4")	J	REMOV (W)4"(SLD)
E	ELIM (ARROW)	K	REMOV (Y)4"(SLD)
F	ELIM (WORD)	L	REMOV (W)8"(SLD)

DESIGN

INTERIM REVIEW

DOCUMENT INCOMPLETE. NOT INTENDED FOR PERMIT, BIDDING OR CONSTRUCTION.
ENGINEER: JAKE BOEKAMP
P.E. SERIAL NO: 129661
DATE: 1/9/2020

APPROVAL

INTERIM REVIEW

DOCUMENT INCOMPLETE. NOT INTENDED FOR PERMIT, BIDDING OR CONSTRUCTION.
ENGINEER: JOHN A. TYLER
P.E. SERIAL NO: 105193
DATE: 1/9/2020

0 10 20 30 60

SCALE: PLAN 1" = 30'

REV. NO.	DATE	DESCRIPTION	BY

PAPE-DAWSON ENGINEERS
SAN ANTONIO | AUSTIN | HOUSTON | FORT WORTH | DALLAS
2000 NW LOOP 410 | SAN ANTONIO, TX 78213 | 210.375.9000
TBPE FIRM REGISTRATION #470 | TBPLS FIRM REGISTRATION #10028800

City of New Braunfels

KLEIN RD PHASE 2

TRAFFIC CONTROL PLAN PHASE 2 STEP 2

SHEET 9 OF 19

DGN:	STATE	PROJECT NO.	ROADWAY
CHK DGN:	TEXAS	NB 18-026	KLEIN RD
DWG:	COUNTY	CITY	SHEET NO.
CHK DWG:	GUADALUPE	NEW BRAUNFELS	78

ITEM	DESCRIPTION	UNIT	QTY
0662-6004	WK ZN PAV MRK NON-REMOV (W)4"(SLD)	LF	570
0662-6034	WK ZN PAV MRK NON-REMOV (Y)4"(SLD)	LF	540

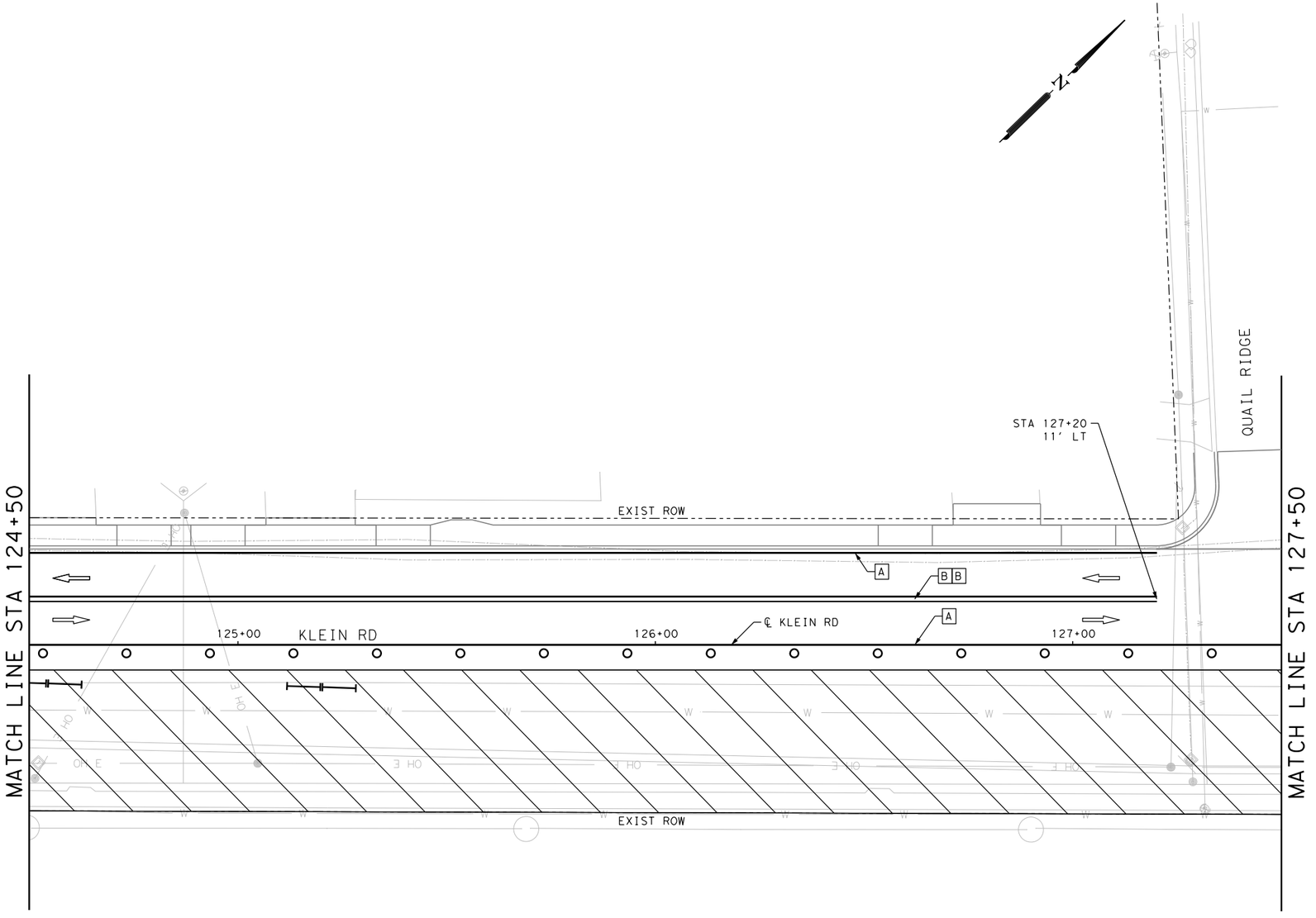

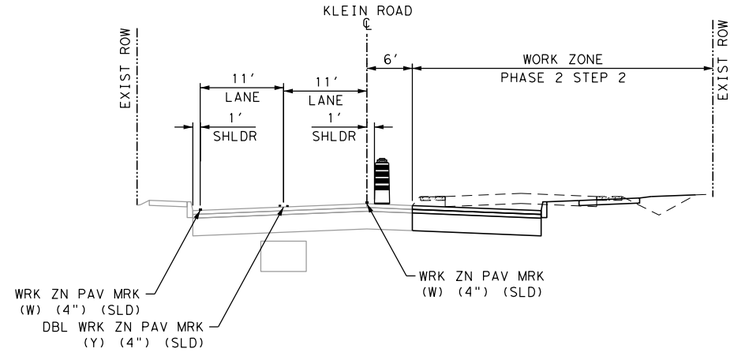

PHASE 2 STEP 2

N.T.S.

119+32 TO 133+65

LEGEND

- SIGN
- TYPE III BARRICADE
- TRAFFIC FLOW ARROWS
- TEMPORARY PAVEMENT
- CONSTRUCTION PHASE
- PLASTIC DRUM
- LOW PROFILE CONCRETE BARRIER TYPE 1 AND TYPE 2

A	NON-REMOV (W)4"(SLD)	G	ELIM (8")
B	NON-REMOV (Y)4"(SLD)	H	ELIM (24")
C	NON-REMOV (W)24"(SLD)	I	ELIM (MED NOSE)
D	ELIM (4")	J	REMOV (W)4"(SLD)
E	ELIM (ARROW)	K	REMOV (Y)4"(SLD)
F	ELIM (WORD)	L	REMOV (W)8"(SLD)

DESIGN

INTERIM REVIEW

DOCUMENT INCOMPLETE. NOT INTENDED FOR PERMIT, BIDDING OR CONSTRUCTION.
ENGINEER: JAKE BOEKAMP
P.E. SERIAL NO: 129661
DATE: 1/9/2020

APPROVAL

INTERIM REVIEW

DOCUMENT INCOMPLETE. NOT INTENDED FOR PERMIT, BIDDING OR CONSTRUCTION.
ENGINEER: JOHN A. TYLER
P.E. SERIAL NO: 105193
DATE: 1/9/2020

0 10 20 30 60

SCALE: PLAN 1"= 30'

REV. NO.	DATE	DESCRIPTION	BY

PAPE-DAWSON ENGINEERS
SAN ANTONIO | AUSTIN | HOUSTON | FORT WORTH | DALLAS
2000 NW LOOP 410 | SAN ANTONIO, TX 78213 | 210.375.9000
TBPE FIRM REGISTRATION #470 | TBPLS FIRM REGISTRATION #10028800

City of New Braunfels

KLEIN RD PHASE 2

TRAFFIC CONTROL PLAN PHASE 2 STEP 2

SHEET 10 OF 19

DGN:	STATE	PROJECT NO.	ROADWAY
CHK DGN:	TEXAS	NB 18-026	KLEIN RD
DWG:	COUNTY	CITY	SHEET NO.
CHK DWG:	GUADALUPE	NEW BRAUNFELS	79

Plotted on: 1/9/2020

Design Filename: H:\Projects\510\30\03\Design\Civil\TCP\PhaseII\5103003tcp2a10.dgn

ITEM	DESCRIPTION	UNIT	QTY
0662-6004	WK ZN PAV MRK NON-REMOV (W)4"(SLD)	LF	570
0662-6034	WK ZN PAV MRK NON-REMOV (Y)4"(SLD)	LF	540

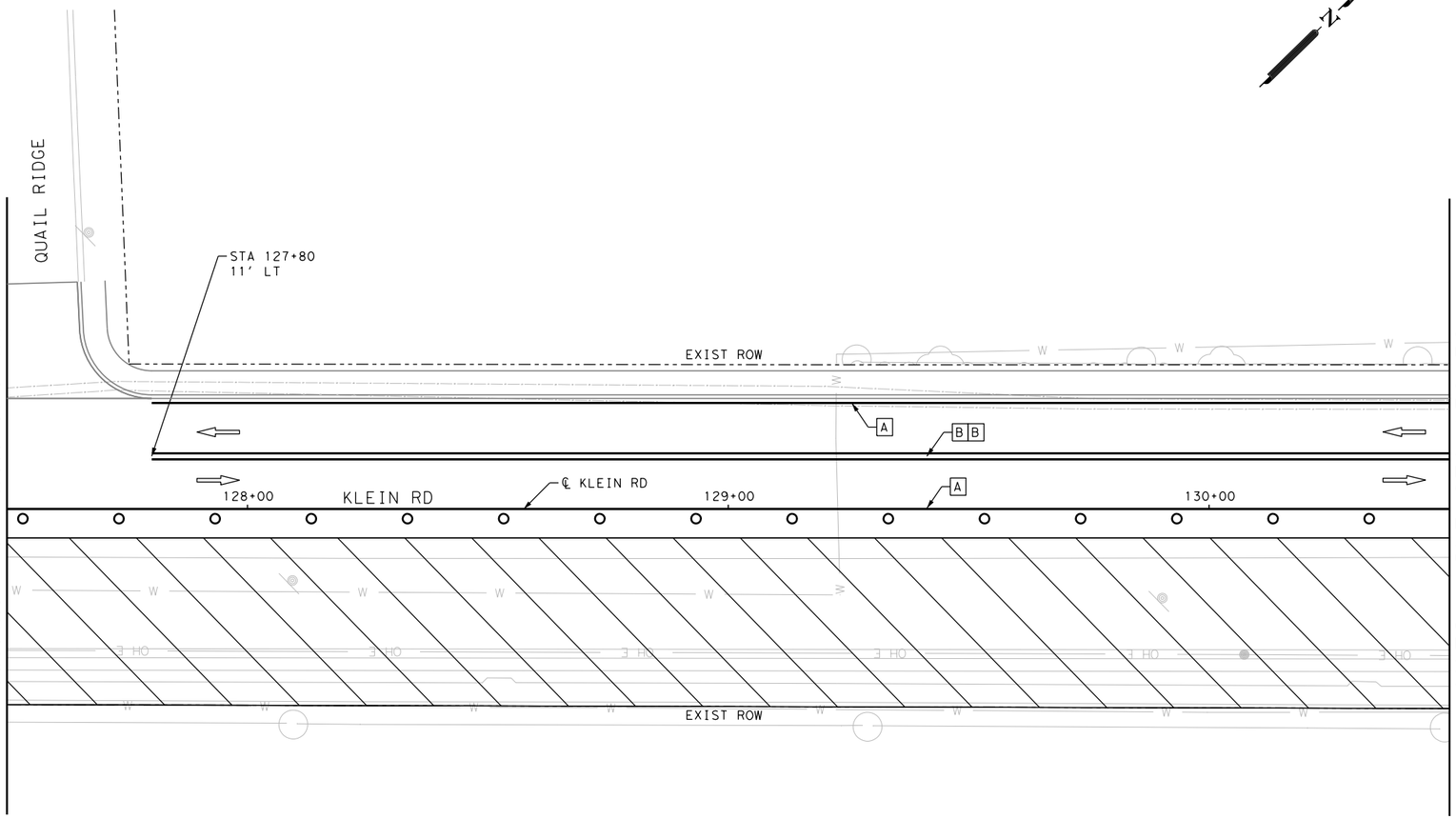

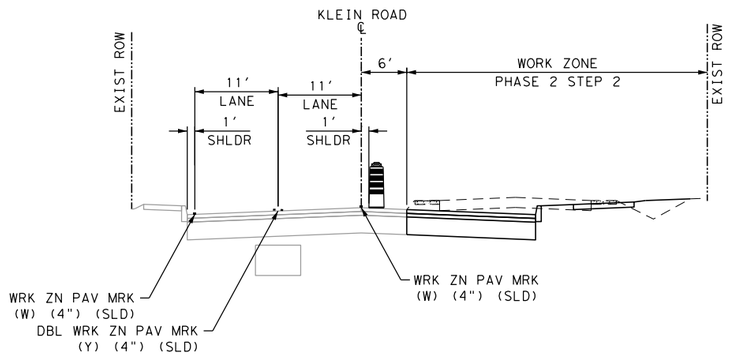

PHASE 2 STEP 2

N.T.S.

119+32 TO 133+65

LEGEND

- SIGN
- TYPE III BARRICADE
- TRAFFIC FLOW ARROWS
- TEMPORARY PAVEMENT
- CONSTRUCTION PHASE
- PLASTIC DRUM
- LOW PROFILE CONCRETE BARRIER TYPE 1 AND TYPE 2

A	NON-REMOV (W)4"(SLD)	G	ELIM (8")
B	NON-REMOV (Y)4"(SLD)	H	ELIM (24")
C	NON-REMOV (W)24"(SLD)	I	ELIM (MED NOSE)
D	ELIM (4")	J	REMOV (W)4"(SLD)
E	ELIM (ARROW)	K	REMOV (Y)4"(SLD)
F	ELIM (WORD)	L	REMOV (W)8"(SLD)

DESIGN

INTERIM REVIEW

DOCUMENT INCOMPLETE. NOT INTENDED FOR PERMIT, BIDDING OR CONSTRUCTION.
ENGINEER: JAKE BOEKAMP
P.E. SERIAL NO: 129661
DATE: 1/9/2020

APPROVAL

INTERIM REVIEW

DOCUMENT INCOMPLETE. NOT INTENDED FOR PERMIT, BIDDING OR CONSTRUCTION.
ENGINEER: JOHN A. TYLER
P.E. SERIAL NO: 105193
DATE: 1/9/2020

0 10 20 30 60

SCALE: PLAN 1"= 30'

REV. NO.	DATE	DESCRIPTION	BY

PAPE-DAWSON ENGINEERS
SAN ANTONIO | AUSTIN | HOUSTON | FORT WORTH | DALLAS
2000 NW LOOP 410 | SAN ANTONIO, TX 78213 | 210.375.9000
TBPE FIRM REGISTRATION #470 | TBPLS FIRM REGISTRATION #10028800

City of New Braunfels

KLEIN RD PHASE 2

TRAFFIC CONTROL PLAN PHASE 2 STEP 2

SHEET 11 OF 19

DGN:	STATE	PROJECT NO.	ROADWAY
CHK DGN:	TEXAS	NB 18-026	KLEIN RD
DWG:	COUNTY	CITY	SHEET NO.
CHK DWG:	GUADALUPE	NEW BRAUNFELS	80

Plotted on: 1/9/2020

Design Filename: H:\Projects\510\30\03\Design\Civil\TCP\PhaseII\5103003tcp2A11.dgn

Plotted on: 1/9/2020

Design Filename: H:\Projects\510\30\03\Design\Civil\TCP\Phase1\5103003tcp2a12.dgn

ITEM	DESCRIPTION	UNIT	QTY
0662-6004	WK ZN PAV MRK NON-REMOV (W)4"(SLD)	LF	442
0662-6034	WK ZN PAV MRK NON-REMOV (Y)4"(SLD)	LF	442

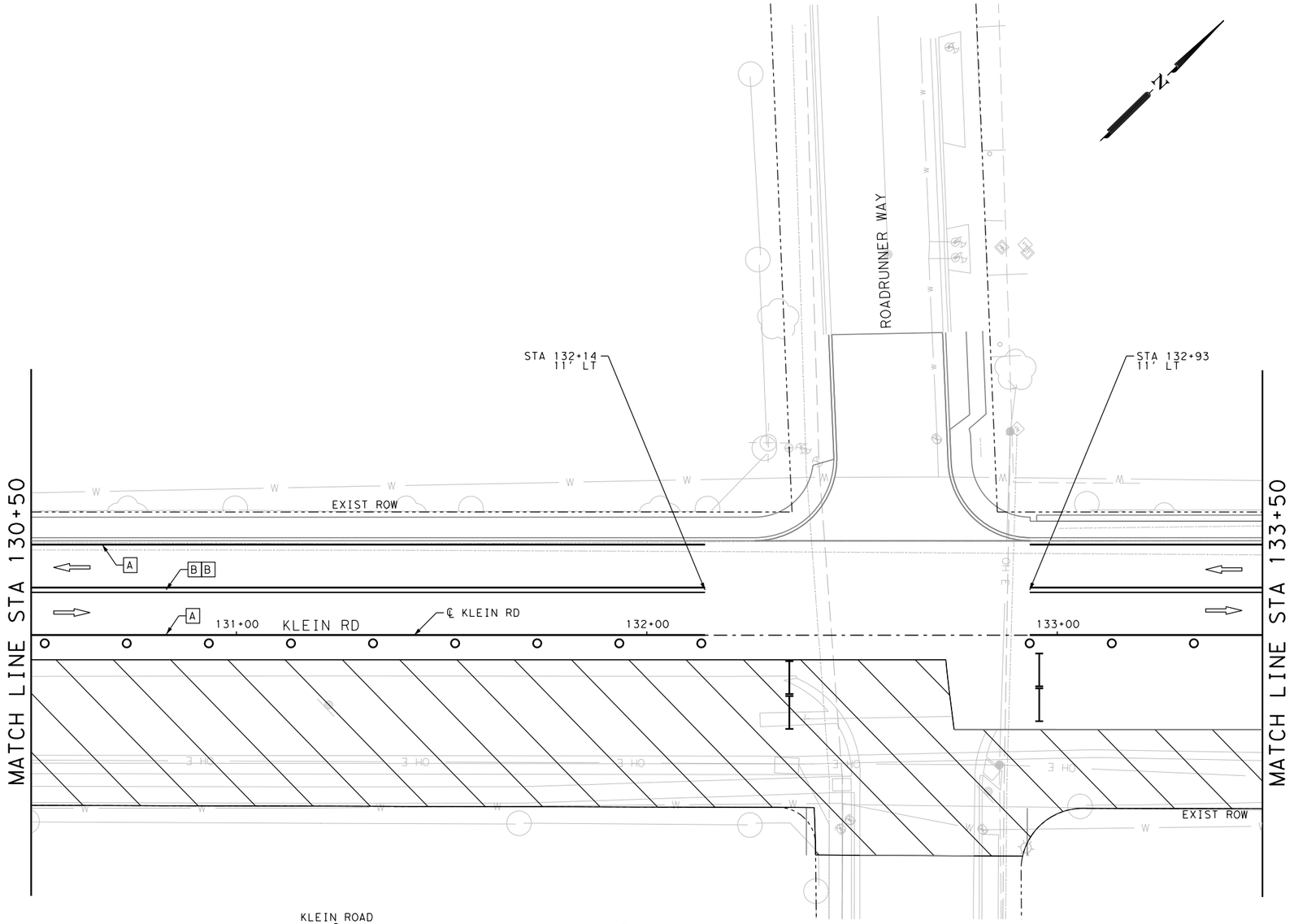

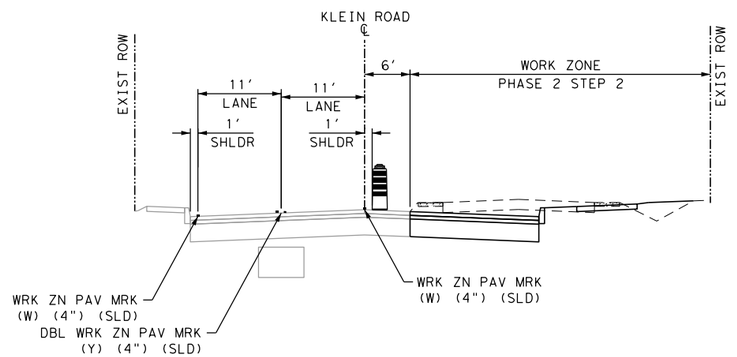

PHASE 2 STEP 2

N.T.S.
119+32 TO 133+65

LEGEND

- SIGN
- TYPE III BARRICADE
- TRAFFIC FLOW ARROWS
- TEMPORARY PAVEMENT
- CONSTRUCTION PHASE
- PLASTIC DRUM
- LOW PROFILE CONCRETE BARRIER TYPE 1 AND TYPE 2

A	NON-REMOV (W)4"(SLD)	G	ELIM (8")
B	NON-REMOV (Y)4"(SLD)	H	ELIM (24")
C	NON-REMOV (W)24"(SLD)	I	ELIM (MED NOSE)
D	ELIM (4")	J	REMOV (W)4"(SLD)
E	ELIM (ARROW)	K	REMOV (Y)4"(SLD)
F	ELIM (WORD)	L	REMOV (W)8"(SLD)

DESIGN

INTERIM REVIEW
DOCUMENT INCOMPLETE. NOT INTENDED FOR PERMIT, BIDDING OR CONSTRUCTION.
ENGINEER: JAKE BOEKAMP
P.E. SERIAL NO: 129661
DATE: 1/9/2020

APPROVAL

INTERIM REVIEW
DOCUMENT INCOMPLETE. NOT INTENDED FOR PERMIT, BIDDING OR CONSTRUCTION.
ENGINEER: JOHN A. TYLER
P.E. SERIAL NO: 105193
DATE: 1/9/2020

0 10 20 30 60

SCALE: PLAN 1"= 30'

REV. NO.	DATE	DESCRIPTION	BY

PAPE-DAWSON ENGINEERS
SAN ANTONIO | AUSTIN | HOUSTON | FORT WORTH | DALLAS
2000 NW LOOP 410 | SAN ANTONIO, TX 78213 | 210.375.9000
TBPE FIRM REGISTRATION #470 | TBPLS FIRM REGISTRATION #10028800

City of New Braunfels

KLEIN RD PHASE 2

TRAFFIC CONTROL PLAN PHASE 2 STEP 2

SHEET 12 OF 19

DGN:	STATE	PROJECT NO.	ROADWAY
CHK DGN:	TEXAS	NB 18-026	KLEIN RD
DWG:	COUNTY	CITY	SHEET NO.
CHK DWG:	GUADALUPE	NEW BRAUNFELS	81

Plotted on: 1/9/2020

Design Filename: H:\Projects\510\30\03\Design\Civil\TCP\Phase1\5103003tcp2a13.dgn

ITEM	DESCRIPTION	UNIT	QTY
0662-6004	WK ZN PAV MRK NON-REMOV (W)4"(SLD)	LF	600
0662-6034	WK ZN PAV MRK NON-REMOV (Y)4"(SLD)	LF	600

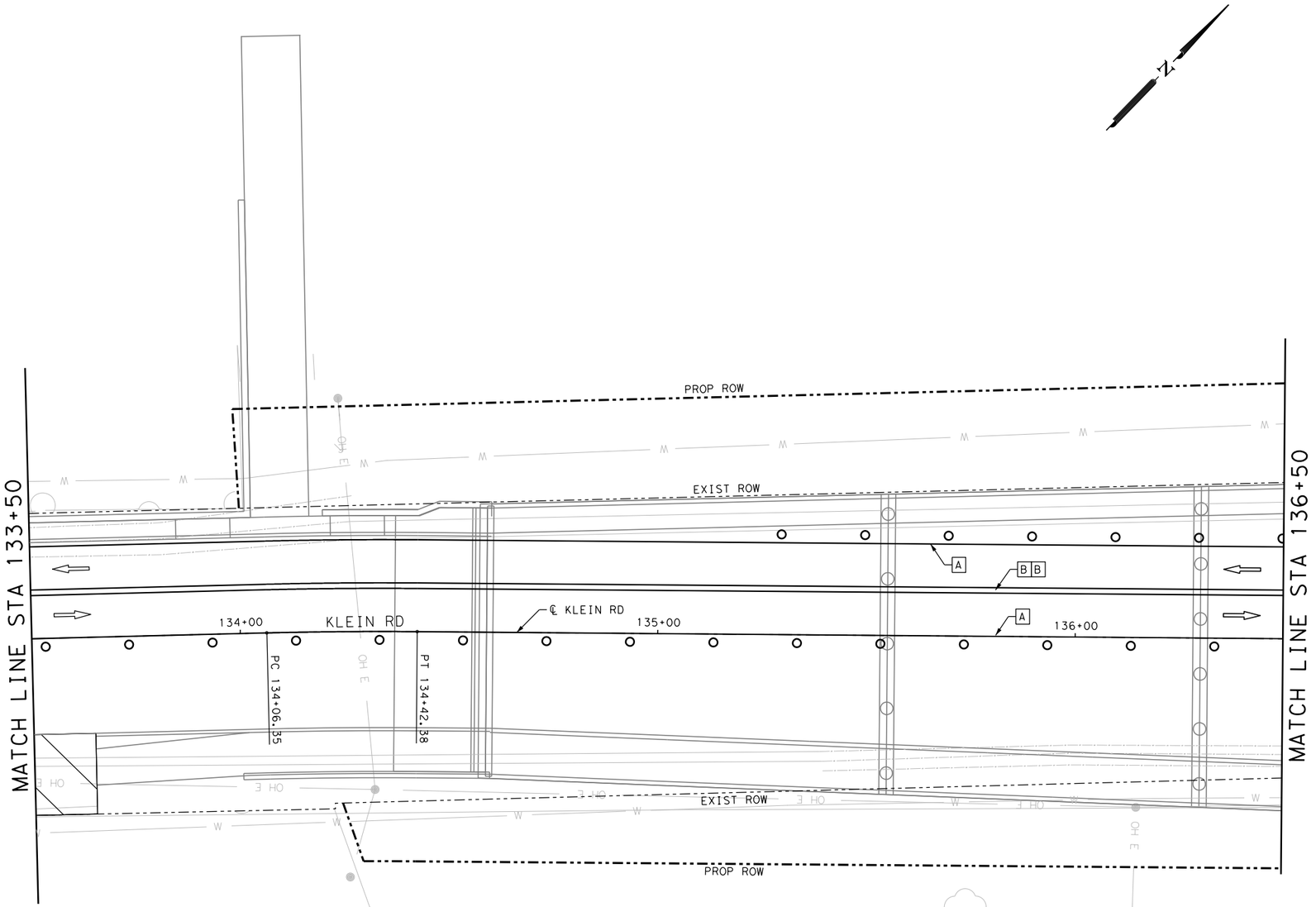

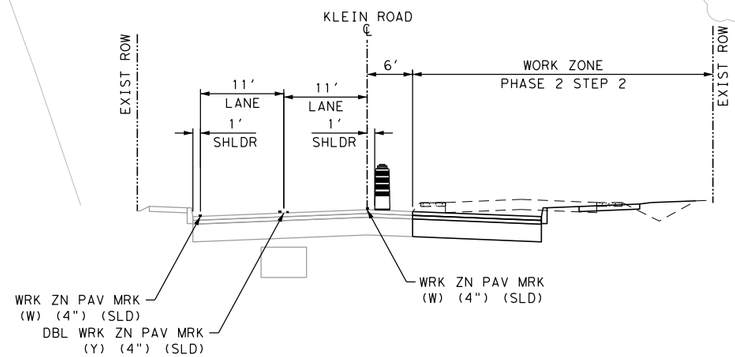

PHASE 2 STEP 2

N.T.S.

119+32 TO 133+65

LEGEND

- SIGN
- TYPE III BARRICADE
- TRAFFIC FLOW ARROWS
- TEMPORARY PAVEMENT
- CONSTRUCTION PHASE
- PLASTIC DRUM
- LOW PROFILE CONCRETE BARRIER TYPE 1 AND TYPE 2

A	NON-REMOV (W)4"(SLD)	G	ELIM (8")
B	NON-REMOV (Y)4"(SLD)	H	ELIM (24")
C	NON-REMOV (W)24"(SLD)	I	ELIM (MED NOSE)
D	ELIM (4")	J	REMOV (W)4"(SLD)
E	ELIM (ARROW)	K	REMOV (Y)4"(SLD)
F	ELIM (WORD)	L	REMOV (W)8"(SLD)

DESIGN

INTERIM REVIEW

DOCUMENT INCOMPLETE. NOT INTENDED FOR PERMIT, BIDDING OR CONSTRUCTION.
ENGINEER: JAKE BOEKAMP
P.E. SERIAL NO: 129661
DATE: 1/9/2020

APPROVAL

INTERIM REVIEW

DOCUMENT INCOMPLETE. NOT INTENDED FOR PERMIT, BIDDING OR CONSTRUCTION.
ENGINEER: JOHN A. TYLER
P.E. SERIAL NO: 105193
DATE: 1/9/2020

0 10 20 30 60

SCALE: PLAN 1" = 30'

REV. NO.	DATE	DESCRIPTION	BY

PAPE-DAWSON ENGINEERS

SAN ANTONIO | AUSTIN | HOUSTON | FORT WORTH | DALLAS
2000 NW LOOP 410 | SAN ANTONIO, TX 78213 | 210.375.9000
TBPE FIRM REGISTRATION #470 | TBPLS FIRM REGISTRATION #10028800

City of New Braunfels

KLEIN RD PHASE 2

TRAFFIC CONTROL PLAN PHASE 2 STEP 2

SHEET 13 OF 19

DGN:	STATE	PROJECT NO.	ROADWAY
CHK DGN:	TEXAS	NB 18-026	KLEIN RD
DWG:	COUNTY	CITY	SHEET NO.
CHK DWG:	GUADALUPE	NEW BRAUNFELS	82

ITEM	DESCRIPTION	UNIT	QTY
0662-6004	WK ZN PAV MRK NON-REMOV (W)4"(SLD)	LF	602
0662-6034	WK ZN PAV MRK NON-REMOV (Y)4"(SLD)	LF	600

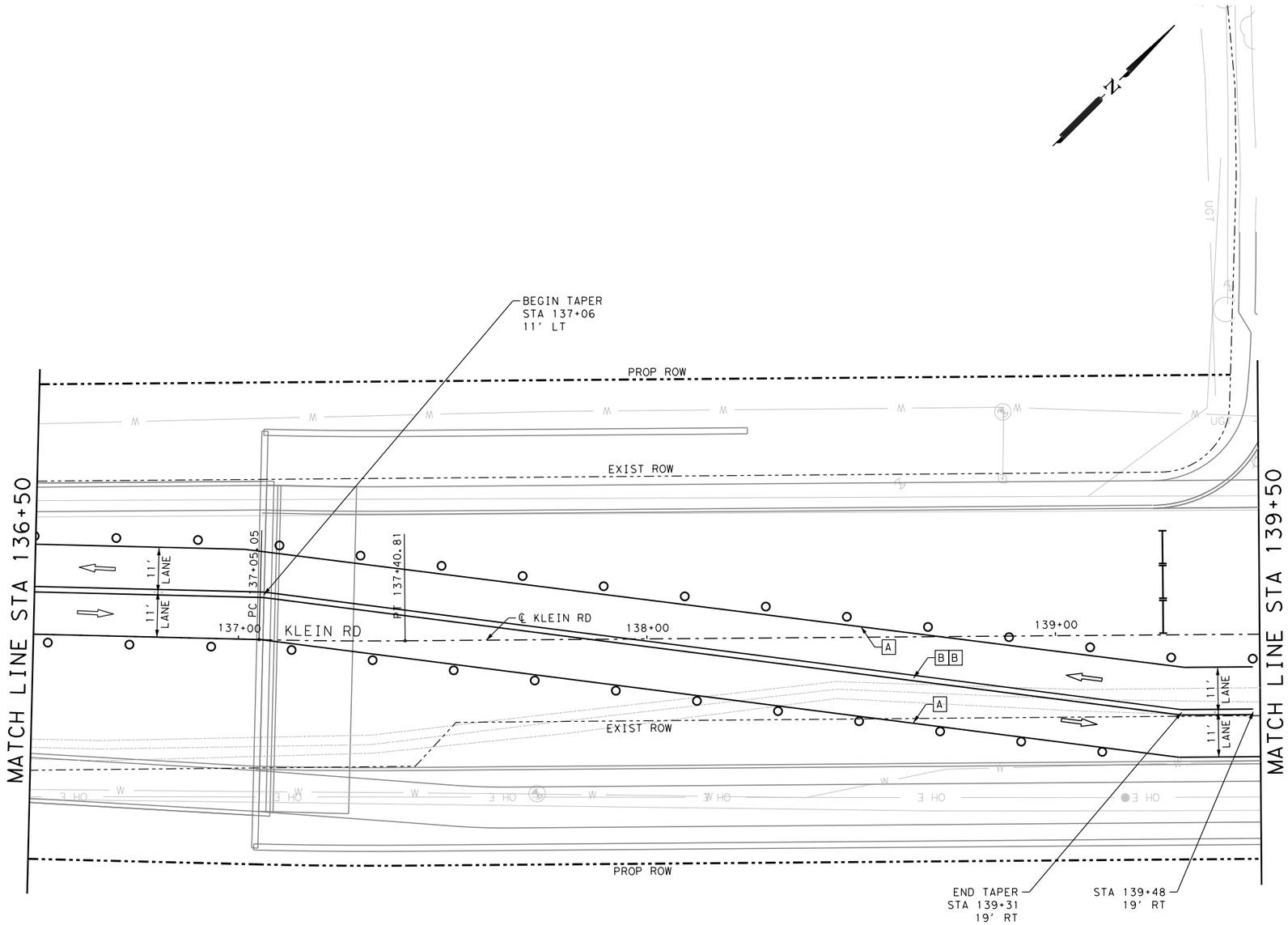

LEGEND

- SIGN
- TYPE III BARRICADE
- TRAFFIC FLOW ARROWS
- TEMPORARY PAVEMENT
- CONSTRUCTION PHASE
- PLASTIC DRUM
- LOW PROFILE CONCRETE BARRIER TYPE 1 AND TYPE 2

A	NON-REMOV (W)4"(SLD)	G	ELIM (8")
B	NON-REMOV (Y)4"(SLD)	H	ELIM (24")
C	NON-REMOV (W)24"(SLD)	I	ELIM (MED NOSE)
D	ELIM (4")	J	REMOV (W)4"(SLD)
E	ELIM (ARROW)	K	REMOV (Y)4"(SLD)
F	ELIM (WORD)	L	REMOV (W)8"(SLD)

DESIGN

INTERIM REVIEW

DOCUMENT INCOMPLETE. NOT INTENDED FOR PERMIT, BIDDING OR CONSTRUCTION.
ENGINEER: JAKE BOEKAMP
P.E. SERIAL NO: 129661
DATE: 1/9/2020

APPROVAL

INTERIM REVIEW

DOCUMENT INCOMPLETE. NOT INTENDED FOR PERMIT, BIDDING OR CONSTRUCTION.
ENGINEER: JOHN A. TYLER
P.E. SERIAL NO: 105193
DATE: 1/9/2020

0 10 20 30 60

SCALE: PLAN 1"= 30'

REV. NO.	DATE	DESCRIPTION	BY

PAPE-DAWSON ENGINEERS
SAN ANTONIO | AUSTIN | HOUSTON | FORT WORTH | DALLAS
2000 NW LOOP 410 | SAN ANTONIO, TX 78213 | 210.375.9000
TBPE FIRM REGISTRATION #470 | TBPLS FIRM REGISTRATION #10028800

City of New Braunfels

KLEIN RD PHASE 2

TRAFFIC CONTROL PLAN PHASE 2 STEP 2

SHEET 14 OF 19

DGN:	STATE	PROJECT NO.	ROADWAY
CHK DGN:	TEXAS	NB 18-026	KLEIN RD
DWG:	COUNTY	CITY	SHEET NO.
CHK DWG:	GUADALUPE	NEW BRAUNFELS	83

Plotted on: 1/9/2020

Design Filename: H:\Projects\510\30\03\Design\Civil\TCP\Phase1\5103003tcp2a14.dgn

Plotted on: 1/9/2020

Design Filename: H:\Projects\510\30\03\Design\Civil\TCP\PhaseII\5103003tcp2a15.dgn

ITEM	DESCRIPTION	UNIT	QTY
0662-6004	WK ZN PAV MRK NON-REMOV (W)4"(SLD)	LF	493
0662-6034	WK ZN PAV MRK NON-REMOV (Y)4"(SLD)	LF	387

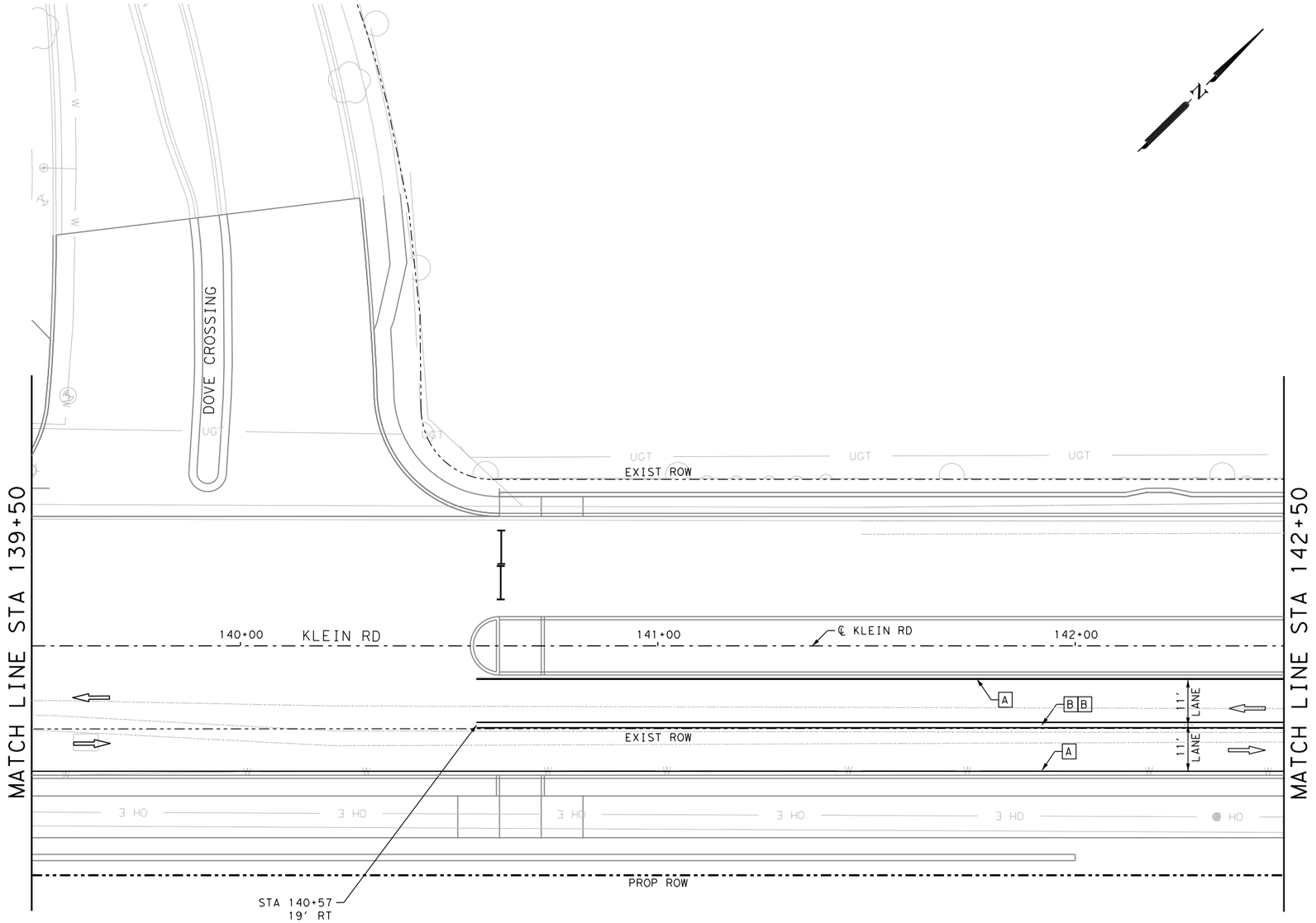

LEGEND

- SIGN
- TYPE III BARRICADE
- TRAFFIC FLOW ARROWS
- TEMPORARY PAVEMENT
- CONSTRUCTION PHASE
- PLASTIC DRUM
- LOW PROFILE CONCRETE BARRIER TYPE 1 AND TYPE 2

A	NON-REMOV (W)4"(SLD)	G	ELIM (8")
B	NON-REMOV (Y)4"(SLD)	H	ELIM (24")
C	NON-REMOV (W)24"(SLD)	I	ELIM (MED NOSE)
D	ELIM (4")	J	REMOV (W)4"(SLD)
E	ELIM (ARROW)	K	REMOV (Y)4"(SLD)
F	ELIM (WORD)	L	REMOV (W)8"(SLD)

DESIGN

INTERIM REVIEW
DOCUMENT INCOMPLETE. NOT INTENDED FOR PERMIT, BIDDING OR CONSTRUCTION.
ENGINEER: JAKE BOEKAMP
P.E. SERIAL NO: 129661
DATE: 1/9/2020

APPROVAL

INTERIM REVIEW
DOCUMENT INCOMPLETE. NOT INTENDED FOR PERMIT, BIDDING OR CONSTRUCTION.
ENGINEER: JOHN A. TYLER
P.E. SERIAL NO: 105193
DATE: 1/9/2020

0 10 20 30 60

SCALE: PLAN 1"= 30'

REV. NO.	DATE	DESCRIPTION	BY

PAPE-DAWSON ENGINEERS
SAN ANTONIO | AUSTIN | HOUSTON | FORT WORTH | DALLAS
2000 NW LOOP 410 | SAN ANTONIO, TX 78213 | 210.375.9000
TBPE FIRM REGISTRATION #470 | TBPLS FIRM REGISTRATION #10028800

City of New Braunfels

KLEIN RD PHASE 2

TRAFFIC CONTROL PLAN PHASE 2 STEP 2

SHEET 15 OF 19

DGN:	STATE	PROJECT NO.	ROADWAY
CHK DGN:	TEXAS	NB 18-026	KLEIN RD
DWG:	COUNTY	CITY	SHEET NO.
CHK DWG:	GUADALUPE	NEW BRAUNFELS	84

ITEM	DESCRIPTION	UNIT	QTY
0662-6004	WK ZN PAV MRK NON-REMOV (W)4"(SLD)	LF	600
0662-6034	WK ZN PAV MRK NON-REMOV (Y)4"(SLD)	LF	600

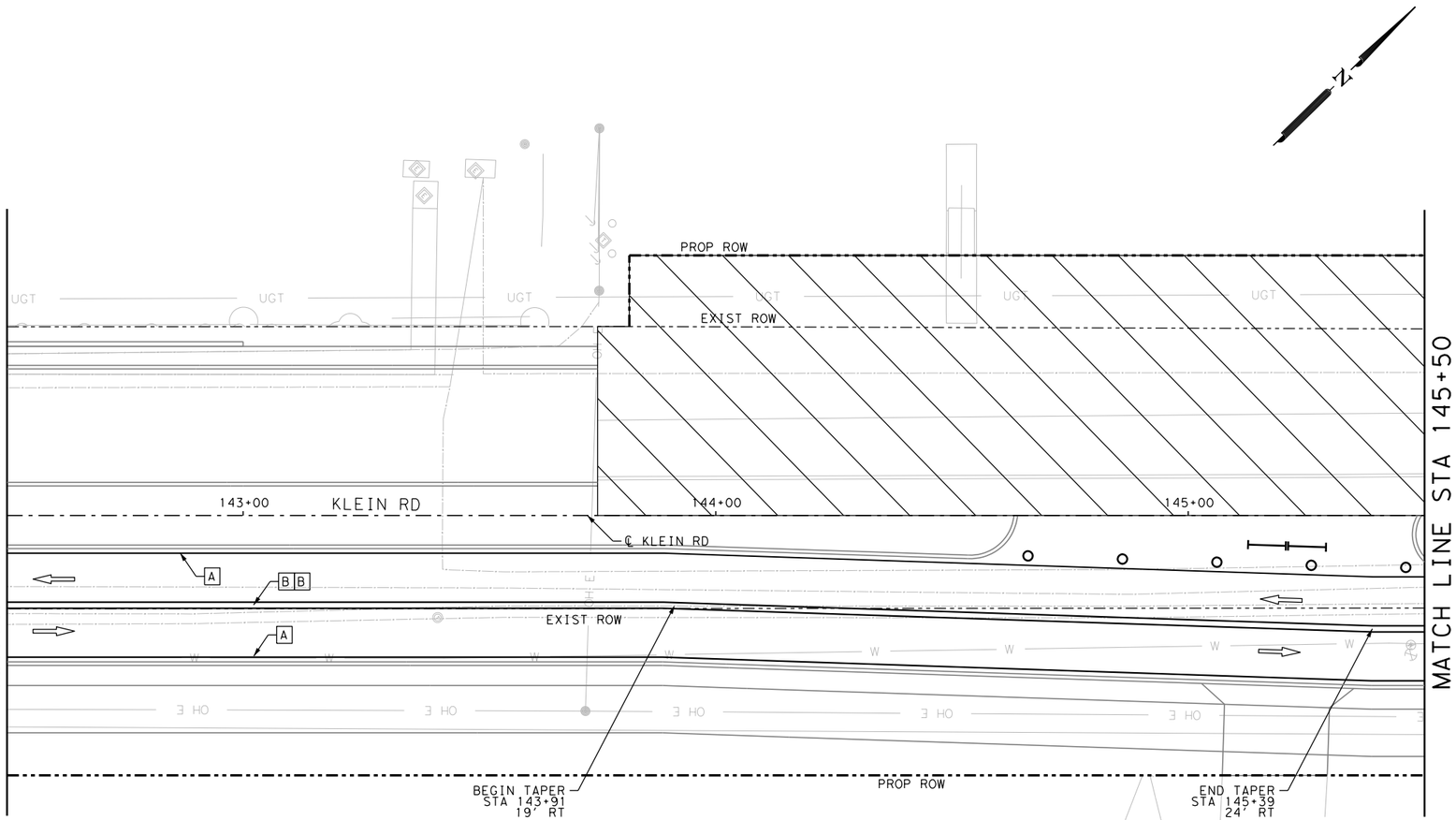

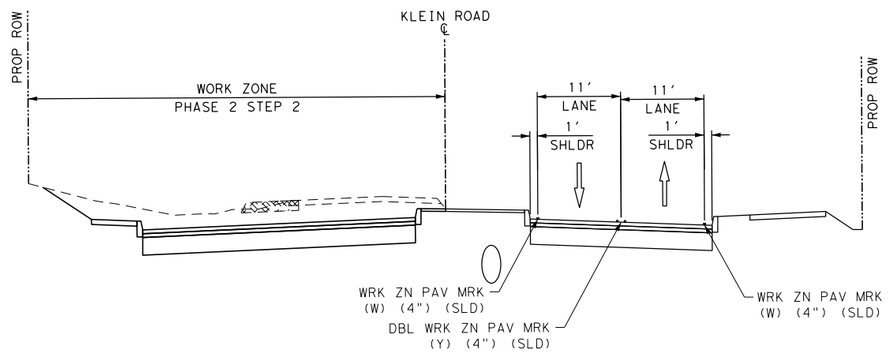

PHASE 2 STEP 2

N.T.S.
142+75 TO 147+23

LEGEND

- SIGN
- TYPE III BARRICADE
- TRAFFIC FLOW ARROWS
- TEMPORARY PAVEMENT
- CONSTRUCTION PHASE
- PLASTIC DRUM
- LOW PROFILE CONCRETE BARRIER TYPE 1 AND TYPE 2

A	NON-REMOV (W)4"(SLD)	G	ELIM (8")
B	NON-REMOV (Y)4"(SLD)	H	ELIM (24")
C	NON-REMOV (W)24"(SLD)	I	ELIM (MED NOSE)
D	ELIM (4")	J	REMOV (W)4"(SLD)
E	ELIM (ARROW)	K	REMOV (Y)4"(SLD)
F	ELIM (WORD)	L	REMOV (W)8"(SLD)

DESIGN

INTERIM REVIEW
DOCUMENT INCOMPLETE. NOT INTENDED FOR PERMIT, BIDDING OR CONSTRUCTION.
ENGINEER: JAKE BOEKAMP
P.E. SERIAL NO: 129661
DATE: 1/9/2020

APPROVAL

INTERIM REVIEW
DOCUMENT INCOMPLETE. NOT INTENDED FOR PERMIT, BIDDING OR CONSTRUCTION.
ENGINEER: JOHN A. TYLER
P.E. SERIAL NO: 105193
DATE: 1/9/2020

0 10 20 30 60

SCALE: PLAN 1"= 30'

REV. NO.	DATE	DESCRIPTION	BY

PAPE-DAWSON ENGINEERS
SAN ANTONIO | AUSTIN | HOUSTON | FORT WORTH | DALLAS
2000 NW LOOP 410 | SAN ANTONIO, TX 78213 | 210.375.9000
TBPE FIRM REGISTRATION #470 | TBPLS FIRM REGISTRATION #10028800

City of New Braunfels

KLEIN RD PHASE 2

TRAFFIC CONTROL PLAN PHASE 2 STEP 2

SHEET 16 OF 19

DGN:	STATE	PROJECT NO.	ROADWAY
CHK DGN:	TEXAS	NB 18-026	KLEIN RD
DWG:	COUNTY	CITY	SHEET NO.
CHK DWG:	GUADALUPE	NEW BRAUNFELS	85

Plotted on: 1/9/2020

Design Filename: H:\Projects\510\30\03\Design\Civil\TCP\PhaseII\5103003tcp2a16.dgn

ITEM	DESCRIPTION	UNIT	QTY
0662-6004	WK ZN PAV MRK NON-REMOV (W)4"(SLD)	LF	600
0662-6034	WK ZN PAV MRK NON-REMOV (Y)4"(SLD)	LF	600

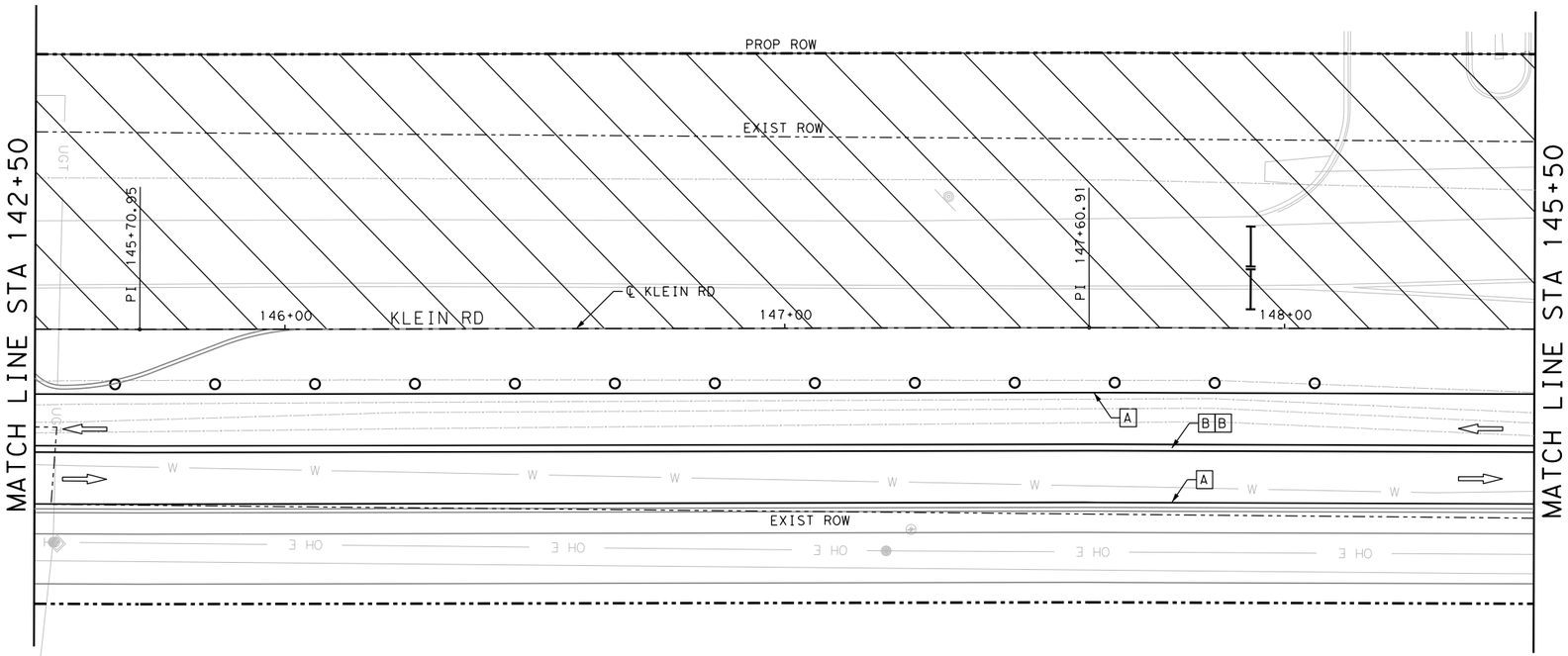

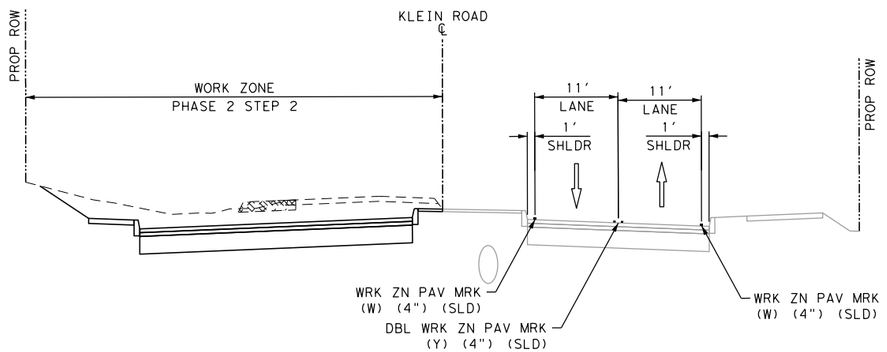

PHASE 2 STEP 2

N.T.S.

142+75 TO 147+23

LEGEND

- SIGN
- TYPE III BARRICADE
- TRAFFIC FLOW ARROWS
- TEMPORARY PAVEMENT
- CONSTRUCTION PHASE
- PLASTIC DRUM
- LOW PROFILE CONCRETE BARRIER TYPE 1 AND TYPE 2

A	NON-REMOV (W)4"(SLD)	G	ELIM (8")
B	NON-REMOV (Y)4"(SLD)	H	ELIM (24")
C	NON-REMOV (W)24"(SLD)	I	ELIM (MED NOSE)
D	ELIM (4")	J	REMOV (W)4"(SLD)
E	ELIM (ARROW)	K	REMOV (Y)4"(SLD)
F	ELIM (WORD)	L	REMOV (W)8"(SLD)

DESIGN

INTERIM REVIEW

DOCUMENT INCOMPLETE. NOT INTENDED FOR PERMIT, BIDDING OR CONSTRUCTION.
ENGINEER: JAKE BOEKAMP
P.E. SERIAL NO: 129661
DATE: 1/9/2020

APPROVAL

INTERIM REVIEW

DOCUMENT INCOMPLETE. NOT INTENDED FOR PERMIT, BIDDING OR CONSTRUCTION.
ENGINEER: JOHN A. TYLER
P.E. SERIAL NO: 105193
DATE: 1/9/2020

0 10 20 30 60

SCALE: PLAN 1"= 30'

REV. NO.	DATE	DESCRIPTION	BY

PAPE-DAWSON ENGINEERS
SAN ANTONIO | AUSTIN | HOUSTON | FORT WORTH | DALLAS
2000 NW LOOP 410 | SAN ANTONIO, TX 78213 | 210.375.9000
TBPE FIRM REGISTRATION #470 | TBPLS FIRM REGISTRATION #10028800

City of New Braunfels

KLEIN RD PHASE 2

TRAFFIC CONTROL PLAN PHASE 2 STEP 2

SHEET 17 OF 19

DGN:	STATE	PROJECT NO.	ROADWAY
CHK DGN:	TEXAS	NB 18-026	KLEIN RD
DWG:	COUNTY	CITY	SHEET NO.
CHK DWG:	GUADALUPE	NEW BRAUNFELS	86

Plotted on: 1/9/2020

Design Filename: H:\Projects\510\30\03\Design\Civil\TCP\Phase1\5103003tcp2A17.dgn

ITEM	DESCRIPTION	UNIT	QTY
0662-6004	WK ZN PAV MRK NON-REMOV (W)4"(SLD)	LF	600
0662-6034	WK ZN PAV MRK NON-REMOV (Y)4"(SLD)	LF	600

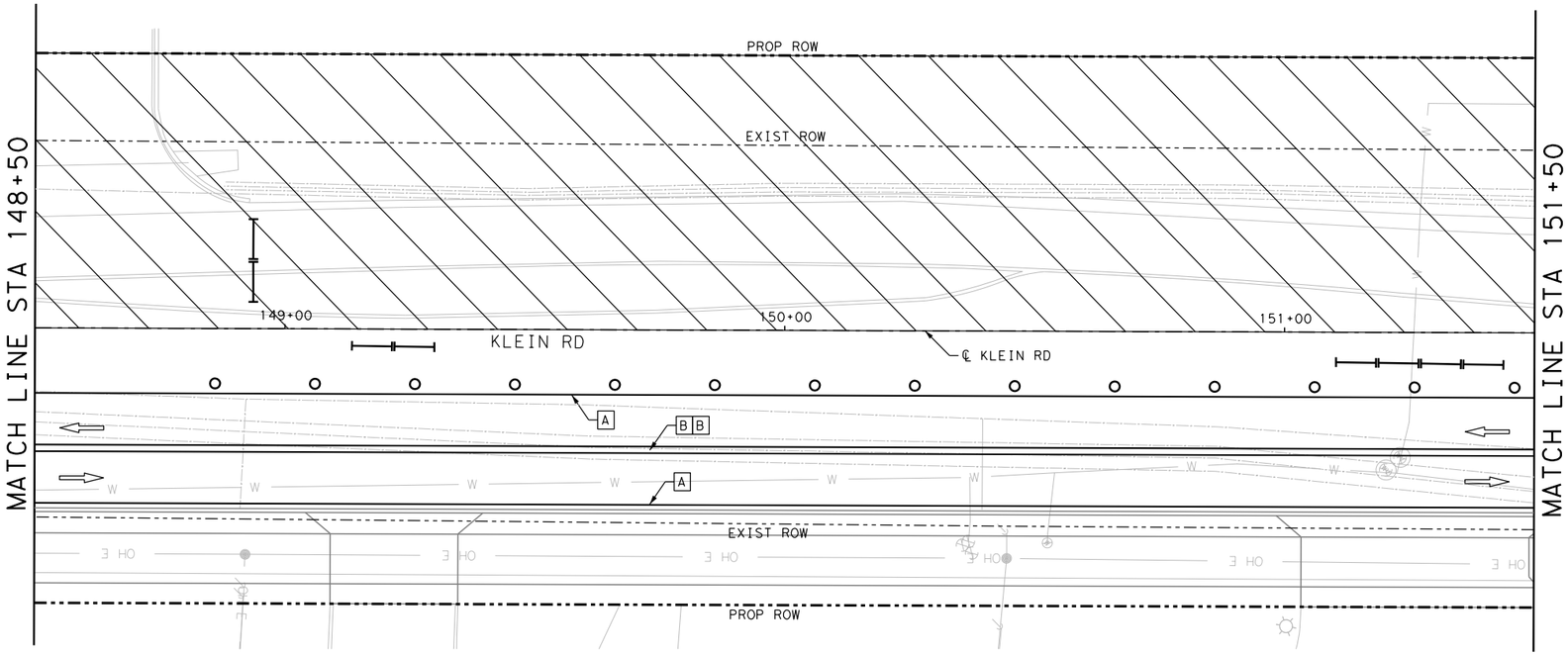

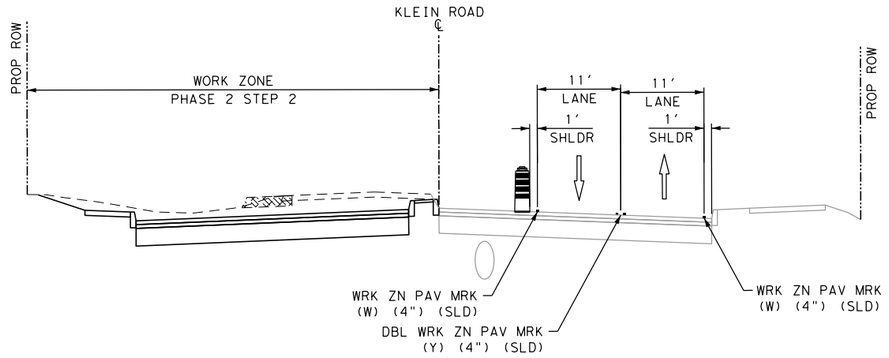

PHASE 2 STEP 2

N.T.S.

146+00 TO END

LEGEND

- SIGN
- TYPE III BARRICADE
- TRAFFIC FLOW ARROWS
- TEMPORARY PAVEMENT
- CONSTRUCTION PHASE
- PLASTIC DRUM
- LOW PROFILE CONCRETE BARRIER TYPE 1 AND TYPE 2

A	NON-REMOV (W)4"(SLD)	G	ELIM (8")
B	NON-REMOV (Y)4"(SLD)	H	ELIM (24")
C	NON-REMOV (W)24"(SLD)	I	ELIM (MED NOSE)
D	ELIM (4")	J	REMOV (W)4"(SLD)
E	ELIM (ARROW)	K	REMOV (Y)4"(SLD)
F	ELIM (WORD)	L	REMOV (W)8"(SLD)

DESIGN

INTERIM REVIEW

DOCUMENT INCOMPLETE. NOT INTENDED FOR PERMIT, BIDDING OR CONSTRUCTION.
ENGINEER: JAKE BOEKAMP
P.E. SERIAL NO: 129661
DATE: 1/9/2020

APPROVAL

INTERIM REVIEW

DOCUMENT INCOMPLETE. NOT INTENDED FOR PERMIT, BIDDING OR CONSTRUCTION.
ENGINEER: JOHN A. TYLER
P.E. SERIAL NO: 105193
DATE: 1/9/2020

0 10 20 30 60

SCALE: PLAN 1"= 30'

REV. NO.	DATE	DESCRIPTION	BY

PAPE-DAWSON ENGINEERS
SAN ANTONIO | AUSTIN | HOUSTON | FORT WORTH | DALLAS
2000 NW LOOP 410 | SAN ANTONIO, TX 78213 | 210.375.9000
TBPE FIRM REGISTRATION #470 | TBPLS FIRM REGISTRATION #10028800

City of New Braunfels

KLEIN RD PHASE 2

TRAFFIC CONTROL PLAN PHASE 2 STEP 2

SHEET 18 OF 19

DGN:	STATE	PROJECT NO.	ROADWAY
CHK DGN:	TEXAS	NB 18-026	KLEIN RD
DWG:	COUNTY	CITY	SHEET NO.
CHK DWG:	GUADALUPE	NEW BRAUNFELS	87

Plotted on: 1/9/2020

Design Filename: H:\Projects\510\30\03\Design\Civil\TCP\PhaseII\5103003tcp2A18.dgn

Plotted on: 1/9/2020

Design Filename: H:\Projects\510\30\03\Design\Civil\TCP\Phase II\5103003tcp2A19.dgn

ITEM	DESCRIPTION	UNIT	QTY
0662-6004	WK ZN PAV MRK NON-REMOV (W)4"(SLD)	LF	240
0662-6016	WK ZN PAV MRK NON-REMOV (W)24"(SLD)	LF	11
0662-6034	WK ZN PAV MRK NON-REMOV (Y)4"(SLD)	LF	240

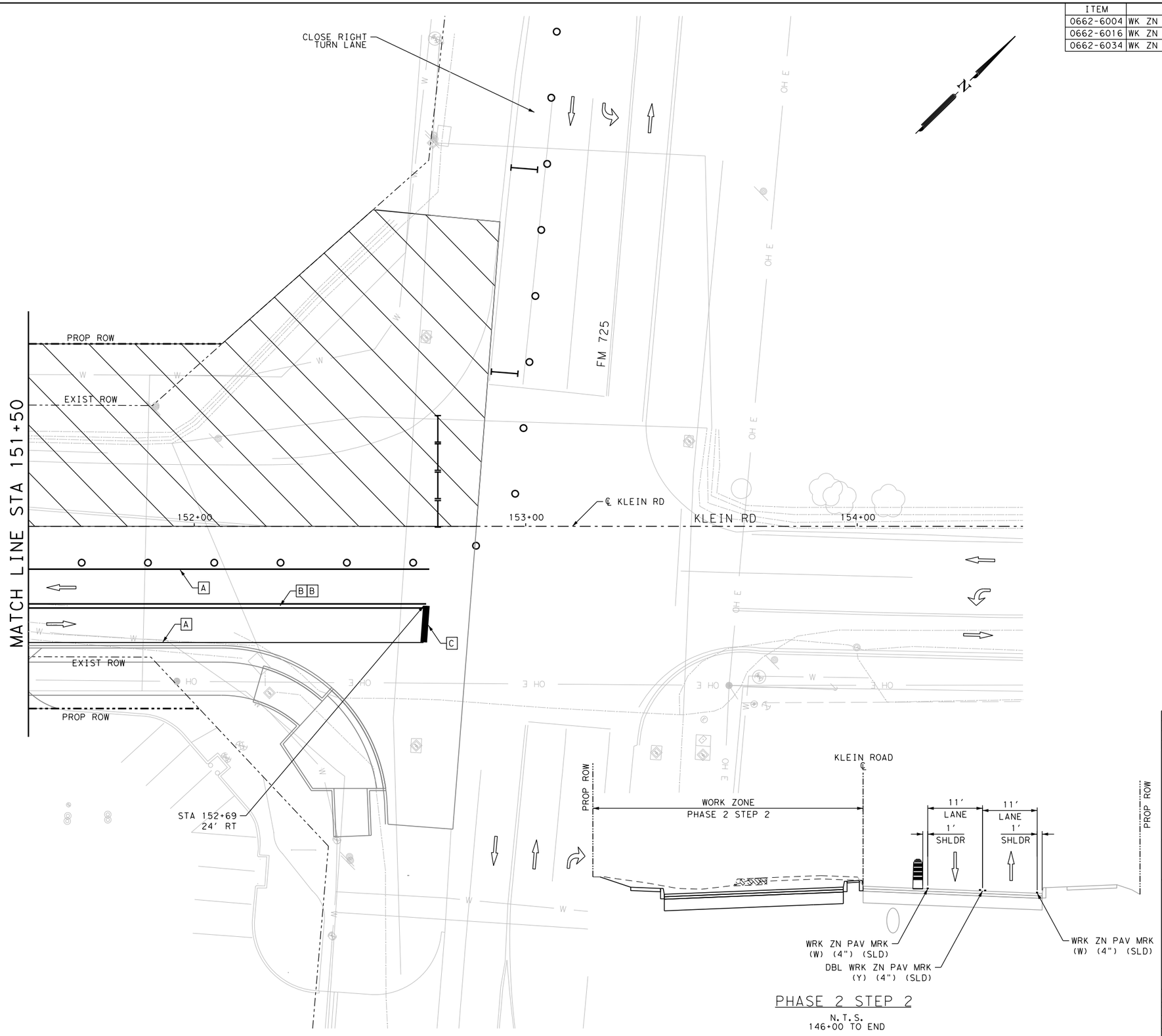

LEGEND

- SIGN
- TYPE III BARRICADE
- TRAFFIC FLOW ARROWS
- TEMPORARY PAVEMENT
- CONSTRUCTION PHASE
- PLASTIC DRUM
- LOW PROFILE CONCRETE BARRIER TYPE 1 AND TYPE 2

A	NON-REMOV (W)4"(SLD)	G	ELIM (8")
B	NON-REMOV (Y)4"(SLD)	H	ELIM (24")
C	NON-REMOV (W)24"(SLD)	I	ELIM (MED NOSE)
D	ELIM (4")	J	REMOV (W)4"(SLD)
E	ELIM (ARROW)	K	REMOV (Y)4"(SLD)
F	ELIM (WORD)	L	REMOV (W)8"(SLD)

DESIGN

INTERIM REVIEW

DOCUMENT INCOMPLETE. NOT INTENDED FOR PERMIT, BIDDING OR CONSTRUCTION.
ENGINEER: JAKE BOEKAMP
P.E. SERIAL NO: 129661
DATE: 1/9/2020

APPROVAL

INTERIM REVIEW

DOCUMENT INCOMPLETE. NOT INTENDED FOR PERMIT, BIDDING OR CONSTRUCTION.
ENGINEER: JOHN A. TYLER
P.E. SERIAL NO: 105193
DATE: 1/9/2020

0 10 20 30 60

SCALE: PLAN 1" = 30'

PHASE 2 STEP 2
N.T.S.
146+00 TO END

REV. NO.	DATE	DESCRIPTION	BY

PAPE-DAWSON ENGINEERS
SAN ANTONIO | AUSTIN | HOUSTON | FORT WORTH | DALLAS
2000 NW LOOP 410 | SAN ANTONIO, TX 78213 | 210.375.9000
TBPE FIRM REGISTRATION #470 | TBPLS FIRM REGISTRATION #10028800

City of New Braunfels

KLEIN RD PHASE 2

TRAFFIC CONTROL PLAN PHASE 2 STEP 2

SHEET 19 OF 19

DGN:	STATE	PROJECT NO.	ROADWAY
CHK DGN:	TEXAS	NB 18-026	KLEIN RD
DWG:	COUNTY	CITY	SHEET NO.
CHK DWG:	GUADALUPE	NEW BRAUNFELS	88

Plotted on: 1/9/2020

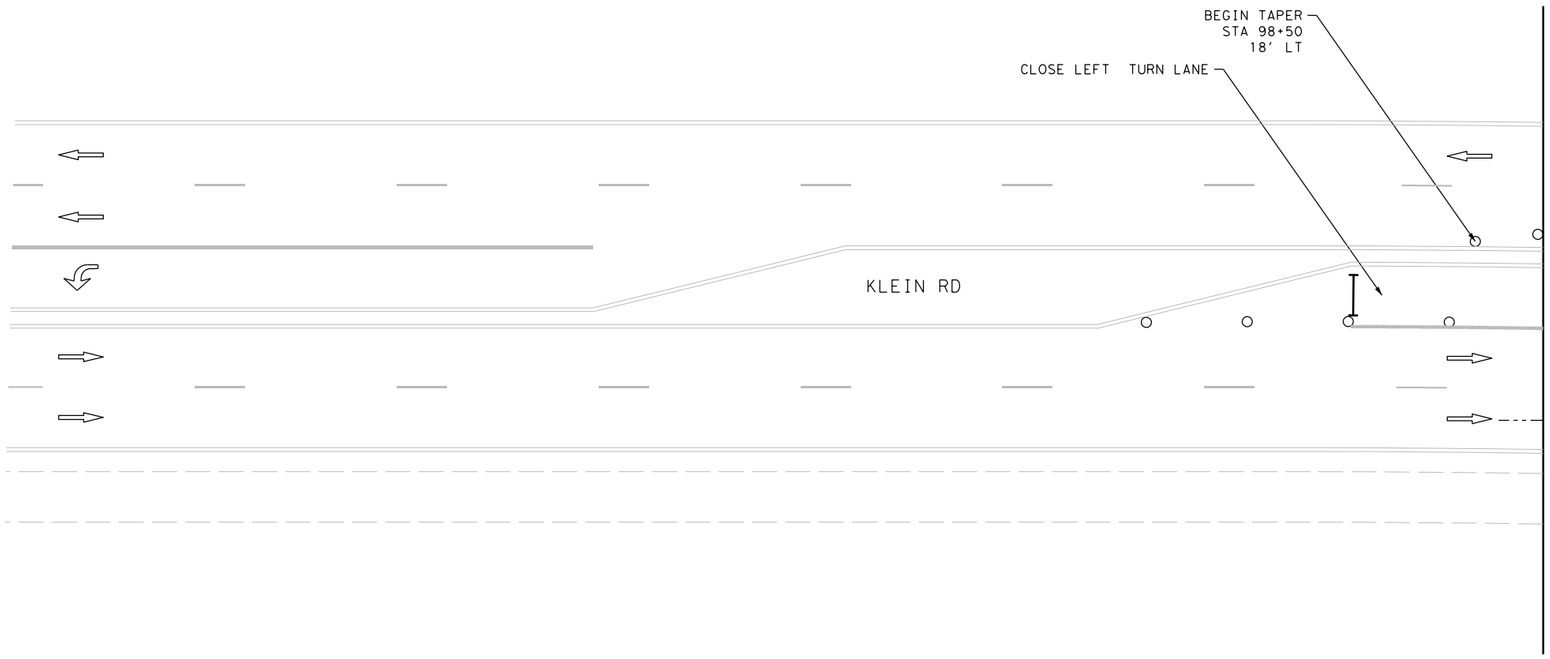

LEGEND

- SIGN
- TYPE III BARRICADE
- TRAFFIC FLOW ARROWS
- TEMPORARY PAVEMENT
- CONSTRUCTION PHASE
- PLASTIC DRUM
- LOW PROFILE CONCRETE BARRIER TYPE 1 AND TYPE 2

A	NON-REMOV (W)4"(SLD)	G	ELIM (8")
B	NON-REMOV (Y)4"(SLD)	H	ELIM (24")
C	NON-REMOV (W)24"(SLD)	I	ELIM (MED NOSE)
D	ELIM (4")	J	REMOV (W)4"(SLD)
E	ELIM (ARROW)	K	REMOV (Y)4"(SLD)
F	ELIM (WORD)	L	REMOV (W)8"(SLD)

DESIGN

INTERIM REVIEW

DOCUMENT INCOMPLETE. NOT INTENDED FOR PERMIT, BIDDING OR CONSTRUCTION.
ENGINEER: JAKE BOEKAMP
P.E. SERIAL NO: 129661
DATE: 1/9/2020

APPROVAL

INTERIM REVIEW

DOCUMENT INCOMPLETE. NOT INTENDED FOR PERMIT, BIDDING OR CONSTRUCTION.
ENGINEER: JOHN A. TYLER
P.E. SERIAL NO: 105193
DATE: 1/9/2020

0 10 20 30 60

SCALE: PLAN 1"= 30'

REV. NO.	DATE	DESCRIPTION	BY

PAPE-DAWSON ENGINEERS
SAN ANTONIO | AUSTIN | HOUSTON | FORT WORTH | DALLAS
2000 NW LOOP 410 | SAN ANTONIO, TX 78213 | 210.375.9000
TBPE FIRM REGISTRATION #470 | TBPLS FIRM REGISTRATION #10028800

City of New Braunfels

NOTES:

1. FOR ADDITIONAL DETAILS SEE TxDOT TCP STANDARD SHEETS.
2. EXISTING FEATURES ARE SHOWN SCREENED BACK.
3. EXISTING PAVEMENT MARKINGS CONFLICTING WITH WORK ZONE PAVEMENT MARKINGS SHALL BE REMOVED.
4. MAINTAIN 30' TURNING RADII AT INTERSECTION DURING CONSTRUCTION.
5. ACCESS TO ADJOINING PROPERTIES MUST BE MAINTAINED AT ALL TIMES.
6. SEE TxDOT BARRICADE AND CONSTUCTION CHANNELIZING DEVICES STANDARDS BC (9) 14 FOR BARREL SPACING.

KLEIN RD PHASE 2

TRAFFIC CONTROL PLAN PHASE 3

SHEET 1 OF 4

DGN:	STATE	PROJECT NO.	ROADWAY
CHK DGN:	TEXAS	NB 18-026	KLEIN RD
DWG:	COUNTY	CITY	SHEET NO.
CHK DWG:	GUADALUPE	NEW BRAUNFELS	89

Design Filename: H:\Projects\510\30\03\Design\Civil\TCP\PhaseIII\5103003tcp301.dgn

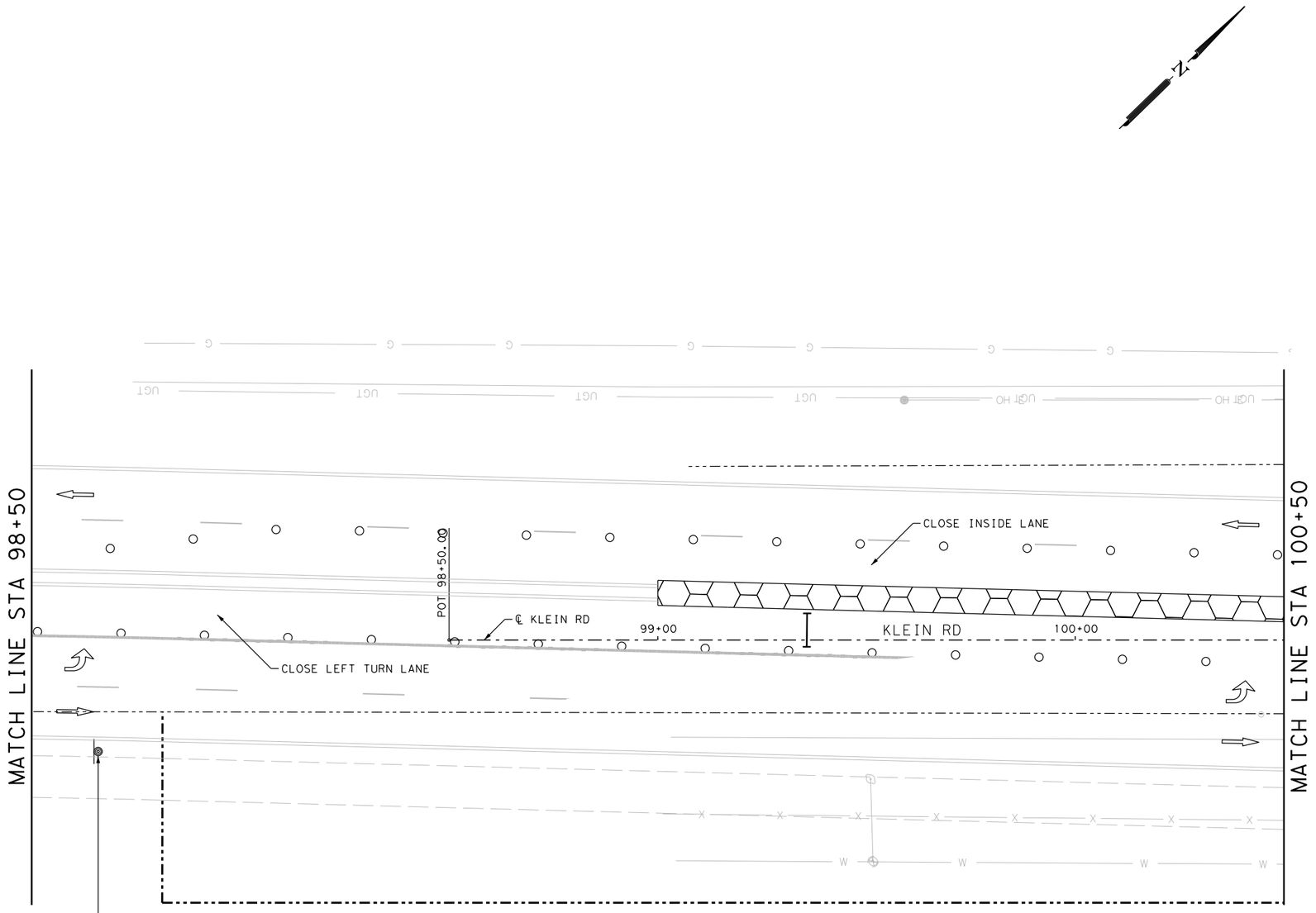

LEGEND

- SIGN
- TYPE III BARRICADE
- TRAFFIC FLOW ARROWS
- TEMPORARY PAVEMENT
- CONSTRUCTION PHASE
- PLASTIC DRUM
- LOW PROFILE CONCRETE BARRIER TYPE 1 AND TYPE 2

A	NON-REMOV (W)4"(SLD)	G	ELIM (8")
B	NON-REMOV (Y)4"(SLD)	H	ELIM (24")
C	NON-REMOV (W)24"(SLD)	I	ELIM (MED NOSE)
D	ELIM (4")	J	REMOV (W)4"(SLD)
E	ELIM (ARROW)	K	REMOV (Y)4"(SLD)
F	ELIM (WORD)	L	REMOV (W)8"(SLD)

DESIGN

INTERIM REVIEW

DOCUMENT INCOMPLETE. NOT INTENDED FOR PERMIT, BIDDING OR CONSTRUCTION.
ENGINEER: JAKE BOEKAMP
P.E. SERIAL NO: 129661
DATE: 1/9/2020

APPROVAL

INTERIM REVIEW

DOCUMENT INCOMPLETE. NOT INTENDED FOR PERMIT, BIDDING OR CONSTRUCTION.
ENGINEER: JOHN A. TYLER
P.E. SERIAL NO: 105193
DATE: 1/9/2020

0 10 20 30 60

SCALE: PLAN 1"= 30'

REV. NO.	DATE	DESCRIPTION	BY

PAPE-DAWSON ENGINEERS
SAN ANTONIO | AUSTIN | HOUSTON | FORT WORTH | DALLAS
2000 NW LOOP 410 | SAN ANTONIO, TX 78213 | 210.375.9000
TBPE FIRM REGISTRATION #470 | TBPLS FIRM REGISTRATION #10028800

City of New Braunfels

KLEIN RD PHASE 2

TRAFFIC CONTROL PLAN PHASE 3

SHEET 2 OF 4

DGN:	STATE	PROJECT NO.	ROADWAY
CHK DGN:	TEXAS	NB 18-026	KLEIN RD
DWG:	COUNTY	CITY	SHEET NO.
CHK DWG:	GUADALUPE	NEW BRAUNFELS	90

Plotted on: 1/9/2020
Design Filename: H:\Projects\510\30\03\Design\Civil\TCP\PhaseIII\5103003tcp302.dgn

Plotted on: 1/9/2020

Design Filename: H:\Projects\510\30\03\Design\Civil\TCP\PhaseIII\5103003tcp303.dgn

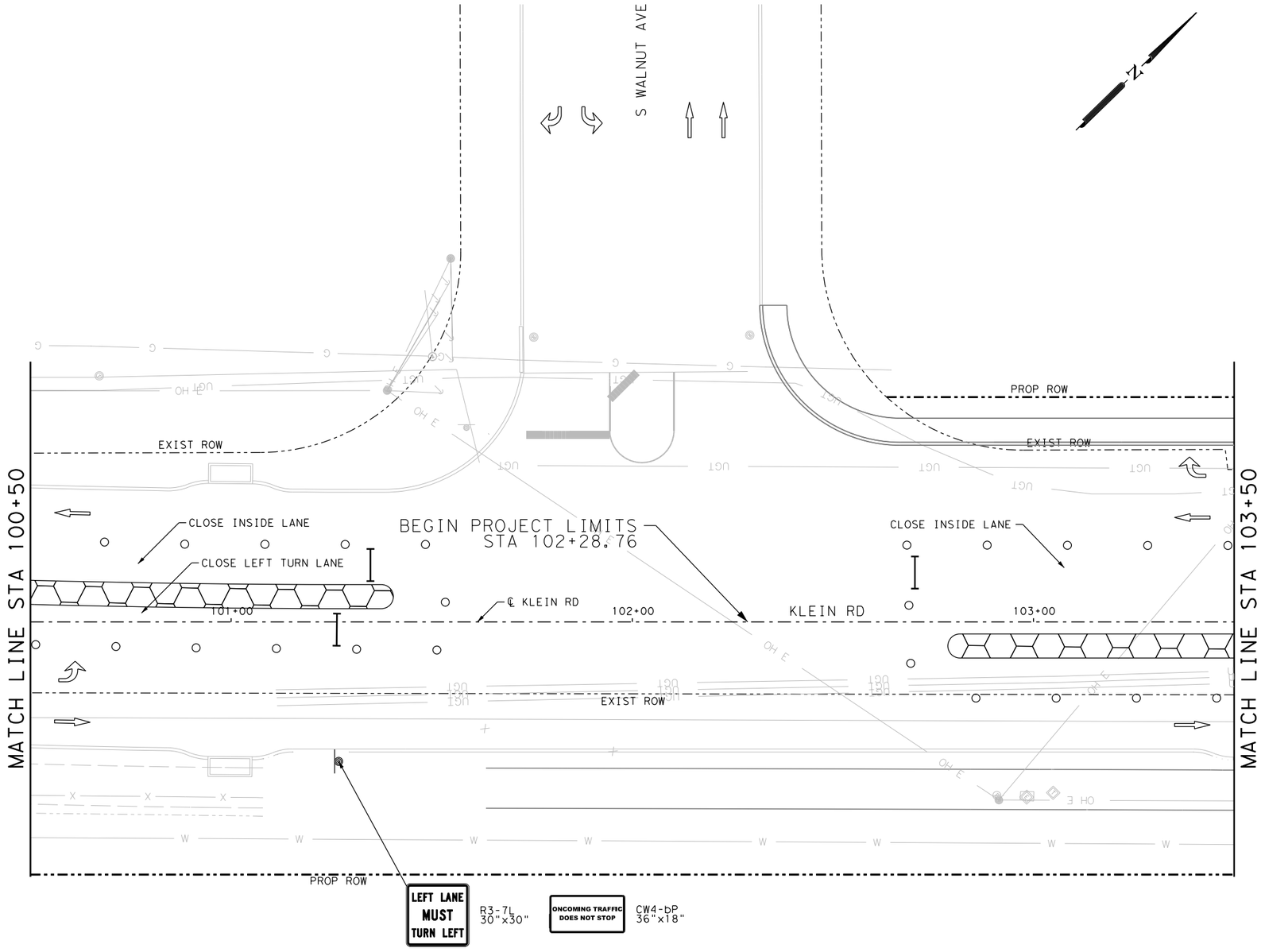

LEGEND

- SIGN
- TYPE III BARRICADE
- TRAFFIC FLOW ARROWS
- TEMPORARY PAVEMENT
- CONSTRUCTION PHASE
- PLASTIC DRUM
- LOW PROFILE CONCRETE BARRIER TYPE 1 AND TYPE 2

A	NON-REMOV (W)4"(SLD)	G	ELIM (8")
B	NON-REMOV (Y)4"(SLD)	H	ELIM (24")
C	NON-REMOV (W)24"(SLD)	I	ELIM (MED NOSE)
D	ELIM (4")	J	REMOV (W)4"(SLD)
E	ELIM (ARROW)	K	REMOV (Y)4"(SLD)
F	ELIM (WORD)	L	REMOV (W)8"(SLD)

DESIGN

INTERIM REVIEW

DOCUMENT INCOMPLETE. NOT INTENDED FOR PERMIT, BIDDING OR CONSTRUCTION.
ENGINEER: JAKE BOEKAMP
P.E. SERIAL NO: 129661
DATE: 1/9/2020

APPROVAL

INTERIM REVIEW

DOCUMENT INCOMPLETE. NOT INTENDED FOR PERMIT, BIDDING OR CONSTRUCTION.
ENGINEER: JOHN A. TYLER
P.E. SERIAL NO: 105193
DATE: 1/9/2020

0 10 20 30 60

SCALE: PLAN 1" = 30'

REV. NO.	DATE	DESCRIPTION	BY

PAPE-DAWSON ENGINEERS
SAN ANTONIO | AUSTIN | HOUSTON | FORT WORTH | DALLAS
2000 NW LOOP 410 | SAN ANTONIO, TX 78213 | 210.375.9000
TBPE FIRM REGISTRATION #470 | TBPLS FIRM REGISTRATION #10028800

City of New Braunfels

KLEIN RD PHASE 2

TRAFFIC CONTROL PLAN PHASE 3

SHEET 3 OF 4

DGN:	STATE	PROJECT NO.	ROADWAY
CHK DGN:	TEXAS	NB 18-026	KLEIN RD
DWG:	COUNTY	CITY	SHEET NO.
CHK DWG:	GUADALUPE	NEW BRAUNFELS	91

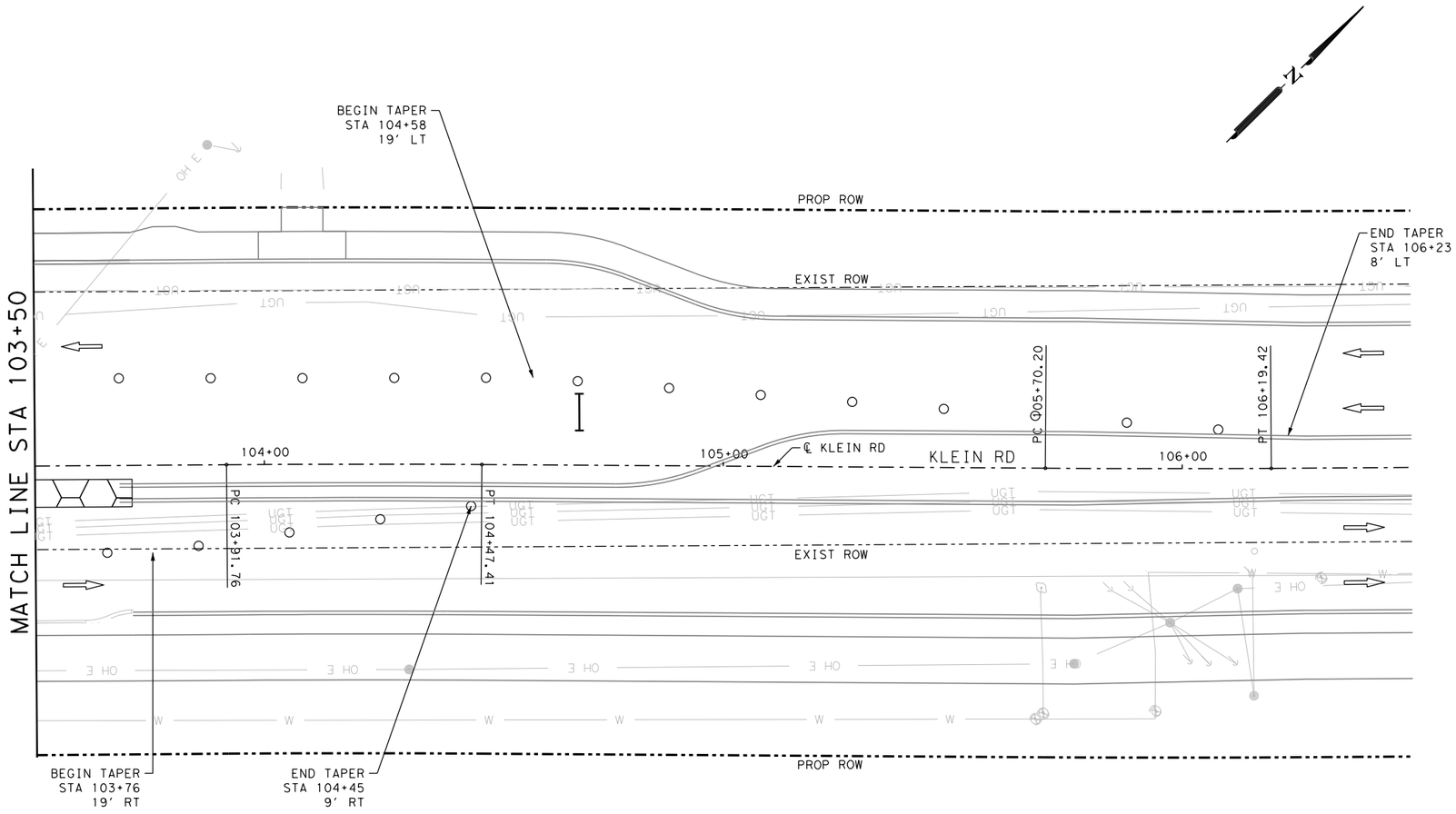

LEGEND

- SIGN
- TYPE III BARRICADE
- TRAFFIC FLOW ARROWS
- TEMPORARY PAVEMENT
- CONSTRUCTION PHASE
- PLASTIC DRUM
- LOW PROFILE CONCRETE BARRIER TYPE 1 AND TYPE 2

A	NON-REMOV (W)4"(SLD)	G	ELIM (8")
B	NON-REMOV (Y)4"(SLD)	H	ELIM (24")
C	NON-REMOV (W)24"(SLD)	I	ELIM (MED NOSE)
D	ELIM (4")	J	REMOV (W)4"(SLD)
E	ELIM (ARROW)	K	REMOV (Y)4"(SLD)
F	ELIM (WORD)	L	REMOV (W)8"(SLD)

DESIGN

INTERIM REVIEW

DOCUMENT INCOMPLETE. NOT INTENDED FOR PERMIT, BIDDING OR CONSTRUCTION.
ENGINEER: JAKE BOEKAMP
P.E. SERIAL NO: 129661
DATE: 1/9/2020

APPROVAL

INTERIM REVIEW

DOCUMENT INCOMPLETE. NOT INTENDED FOR PERMIT, BIDDING OR CONSTRUCTION.
ENGINEER: JOHN A. TYLER
P.E. SERIAL NO: 105193
DATE: 1/9/2020

0 10 20 30 60

SCALE: PLAN 1"= 30'

REV. NO.	DATE	DESCRIPTION	BY

PAPE-DAWSON ENGINEERS
SAN ANTONIO | AUSTIN | HOUSTON | FORT WORTH | DALLAS
2000 NW LOOP 410 | SAN ANTONIO, TX 78213 | 210.375.9000
TBPE FIRM REGISTRATION #470 | TBPLS FIRM REGISTRATION #10028800

City of New Braunfels

KLEIN RD PHASE 2

TRAFFIC CONTROL PLAN PHASE 3

SHEET 4 OF 4

DGN:	STATE	PROJECT NO.	ROADWAY
CHK DGN:	TEXAS	NB 18-026	KLEIN RD
DWG:	COUNTY	CITY	SHEET NO.
CHK DWG:	GUADALUPE	NEW BRAUNFELS	92

Plotted on: 1/9/2020

Design Filename: H:\Projects\510\30\03\Design\Civil\TCP\PhaseIII\5103003tcp304.dgn

DISCLAIMER:
The use of this standard is governed by the "Texas Engineering Practice Act". No warranty of any kind is made by TxDOT for any purpose whatsoever. TxDOT assumes no responsibility for the conversion of this standard to other formats or for incorrect results or damages resulting from its use.

BARRICADE AND CONSTRUCTION (BC) STANDARD SHEETS GENERAL NOTES:

1. The Barricade and Construction Standard Sheets (BC sheets) are intended to show typical examples for placement of temporary traffic control devices, construction pavement markings, and typical work zone signs. The information contained in these sheets meet or exceed the requirements shown in the "Texas Manual on Uniform Traffic Control Devices" (TMUTCD).

2. The development and design of the Traffic Control Plan (TCP)is the responsibility of the Engineer.

3. The Contractor may propose changes to the TCP that are signed and sealed by a licensed professional engineer for approval. The Engineer may develop, sign and seal Contractor proposed changes.

4. The Contractor is responsible for installing and maintaining the traffic control devices as shown in the plans. The Contractor may not move or change the approximate location of any device without the approval of the Engineer.

5. Geometric design of lane shifts and detours should, when possible, meet the applicable design criteria contained in manuals such as the American Association of State Highway and Transportation Officials (AASHTO), "A Policy on Geometric Design of Highways and Streets," the TxDOT "Roadway Design Manual" or engineering judgment.

6. When projects abut, the Engineer(s) may omit the END ROAD WORK, TRAFFIC FINES DOUBLE, and other advance warning signs if the signing would be redundant and the work areas appear continuous to the motorists. If the adjacent project is completed first, the Contractor shall erect the necessary warning signs as shown on these sheets, the TCP sheets or as directed by the Engineer. The BEGIN ROAD WORK NEXT X MILES sign shall be revised to show appropriate work zone distance.

7. The Engineer may require duplicate warning signs on the median side of divided highways where median width will permit and traffic volumes justify the signing.

8. All signs shall be constructed in accordance with the details found in the "Standard Highway Sign Designs for Texas," latest edition. Sign details not shown in this manual shall be shown in the plans or the Engineer shall provide a detail to the Contractor before the sign is manufactured.

9. The temporary traffic control devices shown in the illustrations of the BC sheets are examples. As necessary, the Engineer will determine the most appropriate traffic control devices to be used.

10. As shown on BC(2), the OBEY WARNING SIGNS STATE LAW sign, STAY ALERT TALK OR TEXT LATER (see Sign Detail G20-10T) and the WORK ZONE TRAFFIC FINES DOUBLE sign with plaque shall be erected in advance of the CSJ limits. However, the TRAFFIC FINES DOUBLE sign will not be required on projects consisting solely of mobile operation work, such as striping or milling edgeline rumble strips. The BEGIN ROAD WORK NEXT X MILES, CONTRACTOR and END ROAD WORK signs shall be erected at or near the CSJ limits.

11. Except for devices required by Note 10, traffic control devices should be in place only while work is actually in progress or a definite need exists.

12. The Engineer has the final decision on the location of all traffic control devices.

13. Inactive equipment and work vehicles, including workers' private vehicles must be parked away from travel lanes. They should be as close to the right-of-way line as possible, or located behind a barrier or guardrail, or as approved by the Engineer.

WORKER SAFETY APPAREL NOTES:

1. Workers on foot who are exposed to traffic or to construction equipment within the right-of-way shall wear high-visibility safety apparel meeting the requirements of ISEA "American National Standard for High-Visibility Apparel," or equivalent revisions, and labeled as ANSI 107-2004 standard performance for Class 2 or 3 risk exposure. Class 3 garments should be considered for high traffic volume work areas or night time work.

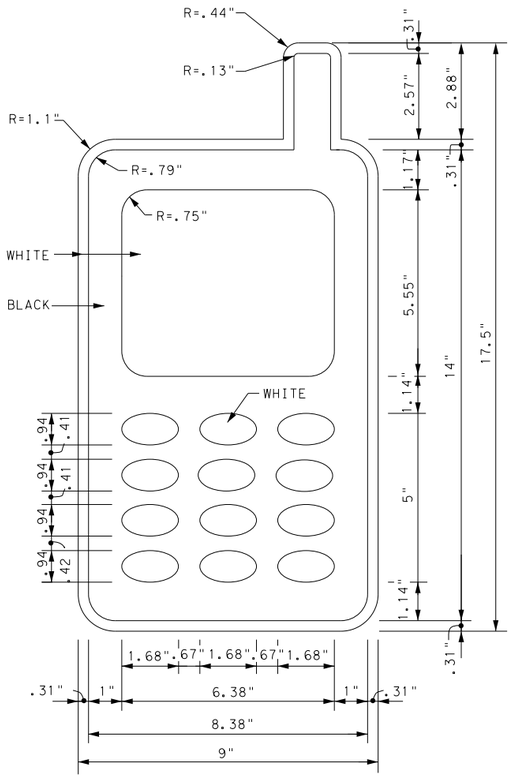

3.0" Radius, 1.25" Border, 0.75" Indent, Black on Yellow;
[STAY ALERT] Font: D
3.0" Radius, 1.25" Border, 0.75" Indent, Black on Orange;
[TALK OR TEXT LATER] Font: C specified length;

SIGN DETAIL (G20-10T)

Only pre-qualified products shall be used. The "Compliant Work Zone Traffic Control Devices List" (CWZTCD) describes pre-qualified products and their sources and may be found on-line at the web address given below or by contacting:

Texas Department of Transportation
Traffic Operations Division - TE
Phone (512) 416-3118

THE DOCUMENTS BELOW CAN BE FOUND ON-LINE AT http://www.txdot.gov
COMPLIANT WORK ZONE TRAFFIC CONTROL DEVICES LIST (CWZTCD)
DEPARTMENTAL MATERIAL SPECIFICATIONS (DMS)
MATERIAL PRODUCER LIST (MPL)
ROADWAY DESIGN MANUAL - SEE "MANUALS (ONLINE MANUALS)"
STANDARD HIGHWAY SIGN DESIGNS FOR TEXAS (SHSD)
TEXAS MANUAL ON UNIFORM TRAFFIC CONTROL DEVICES (TMUTCD)
TRAFFIC ENGINEERING STANDARD SHEETS

Texas Department of Transportation | Traffic Operations Division Standard

BARRICADE AND CONSTRUCTION GENERAL NOTES AND REQUIREMENTS

BC(1)-14

FILE: bc-14.dgn	DN: TxDOT	CK: TxDOT	DW: TxDOT	CK: TxDOT
© TxDOT November 2002	CONT	SECT	JOB	HIGHWAY
REVISIONS				KLEIN RD
4-03 5-10 8-14	DIST	COUNTY		SHEET NO.
9-07 7-13	SAT	GUADALUPE		93

DATE: 1/9/2020 3:42:06 PM
FILE: H:\projects\510\30\03\Design\Civil\Standards\TCP\bc-14.dgn

DISCLAIMER:
The use of this standard is governed by the "Texas Engineering Practice Act". No warranty of any kind is made by TxDOT for any purpose whatsoever. TxDOT assumes no responsibility for the conversion of this standard to other formats or for incorrect results or damages resulting from its use.

DATE: 1/9/2020 3:42:16 PM
FILE: H:\projects\SIO\30\03\Design\Civil\Standards\TCP\bc-14.dgn

TYPICAL LOCATION OF CROSSROAD SIGNS

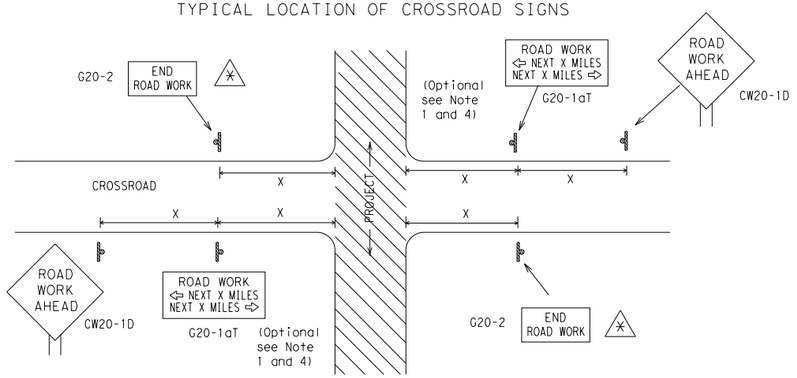

✳ May be mounted on back of "ROAD WORK AHEAD"(CW20-1D) sign with approval of Engineer. (See note 2 below)

1. The typical minimum signing on a crossroad approach should be a "ROAD WORK AHEAD" (CW20-1D)sign and a (G20-2) "END ROAD WORK" sign, unless noted otherwise in plans.
2. The Engineer may use the reduced size 36" x 36" ROAD WORK AHEAD (CW20-1D) sign mounted back to back with the reduced size 36" x 18" "END ROAD WORK"(G20-2) sign on low volume crossroads (see Note 4 under "Typical Construction Warning Sign Size and Spacing"). See the "Standard Highway Sign Designs for Texas" manual for sign details. The Engineer may omit the advance warning signs on low volume crossroads. The Engineer will determine whether a road is low volume. This information shall be shown in the plans.
3. Based on existing field conditions, the Engineer/Inspector may require additional signs such as FLAGGER AHEAD, LOOSE GRAVEL, or other appropriate signs. When additional signs are required, these signs will be considered part of the minimum requirements. The Engineer/Inspector will determine the proper location and spacing of any sign not shown on the BC sheets, Traffic Control Plan sheets or the Work Zone Standard Sheets.
4. The "ROAD WORK NEXT X MILES"(G20-1aT)sign shall be required at high volume crossroads to advise motorists of the length of construction in either direction from the intersection. The Engineer will determine whether a roadway is considered high volume.
5. Additional traffic control devices may be shown elsewhere in the plans for higher volume crossroads.
6. When work occurs in the intersection area, appropriate traffic control devices, as shown elsewhere in the plans or as determined by the Engineer/Inspector, shall be in place.

T-INTERSECTION

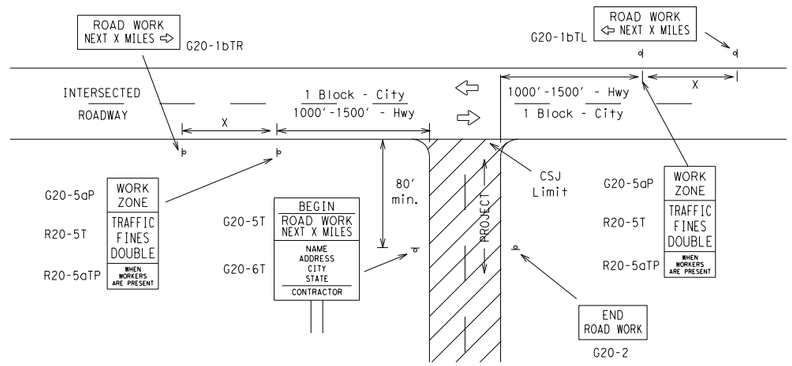

CSJ LIMITS AT T-INTERSECTION

1. The Engineer will determine the types and location of any additional traffic control devices, such as a flagger and accompanying signs, or other signs, that should be used when work is being performed at or near an intersection.
2. If construction closes the road at a T-intersection the Contractor shall place the "CONTRACTOR NAME"(G20-6T) sign behind the Type 3 Barricades for the road closure (see BC(10) also). The "ROAD WORK NEXT X MILES" left arrow(G20-1bTL) and "ROAD WORK NEXT X MILES" right arrow (G20-1bTR)" signs shall be replaced by the detour signing called for in the plans.

TYPICAL CONSTRUCTION WARNING SIGN SIZE AND SPACING[1,5,6]

SIZE			SPACING	
Sign Number or Series	Conventional Road	Expressway/ Freeway	Posted Speed	Sign Spacing "X" △
			MPH	Feet (Apprx.)
CW20[4] CW21 CW22 CW23 CW25	48" x 48"	48" x 48"	30	120
			35	160
			40	240
			45	320
CW1, CW2, CW7, CW8, CW9, CW11, CW14	36" x 36"	48" x 48"	50	400
			55	500[2]
			60	600[2]
CW3, CW4, CW5, CW6, CW8-3, CW10, CW12	48" x 48"	48" x 48"	65	700[2]
			70	800[2]
			75	900[2]
			80	1000[2]
			✳	✳ [3]

✳ For typical sign spacings on divided highways, expressways and freeways, see Part 6 of the "Texas Manual on Uniform Traffic Control Devices" (TMUTCD) typical application diagrams or TCP Standard Sheets.

△ Minimum distance from work area to first Advance Warning sign nearest the work area and/or distance between each additional sign.

GENERAL NOTES

1. Special or larger size signs may be used as necessary.
2. Distance between signs should be increased as required to have 1500 feet advance warning.
3. Distance between signs should be increased as required to have 1/2 mile or more advance warning.
4. 36" x 36" "ROAD WORK AHEAD" (CW20-1D)signs may be used on low volume crossroads at the discretion of the Engineer. See Note 2 under "Typical Location of Crossroad Signs".
5. Only diamond shaped warning sign sizes are indicated.
6. See sign size listing in "TMUTCD", Sign Appendix or the "Standard Highway Sign Designs for Texas" manual for complete list of available sign design sizes.

WORK AREAS IN MULTIPLE LOCATIONS WITHIN CSJ LIMITS

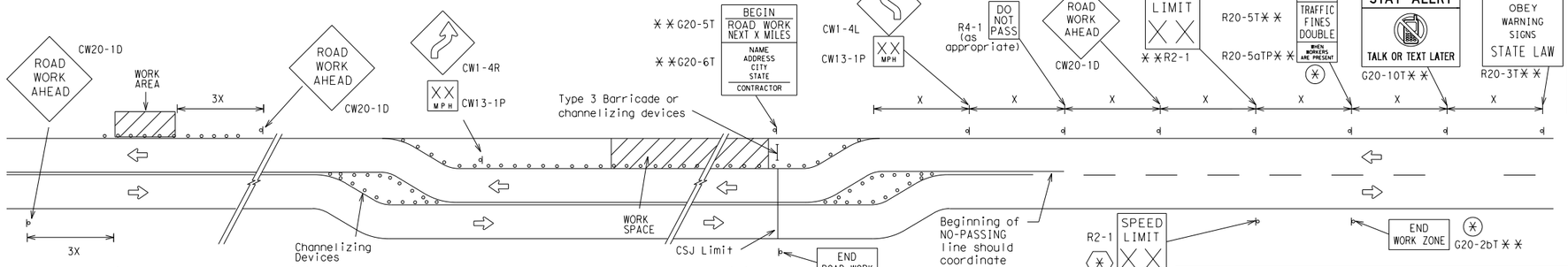

When extended distances occur between minimal work spaces, the Engineer/Inspector should ensure additional "ROAD WORK AHEAD"(CW20-1D)signs are placed in advance of these work areas to remind drivers they are still within the project limits. See the applicable TCP sheets for exact location and spacing of signs and channelizing devices.

SAMPLE LAYOUT OF SIGNING FOR WORK BEGINNING AT THE CSJ LIMITS

SAMPLE LAYOUT OF SIGNING FOR WORK BEGINNING DOWNSTREAM OF THE CSJ LIMITS

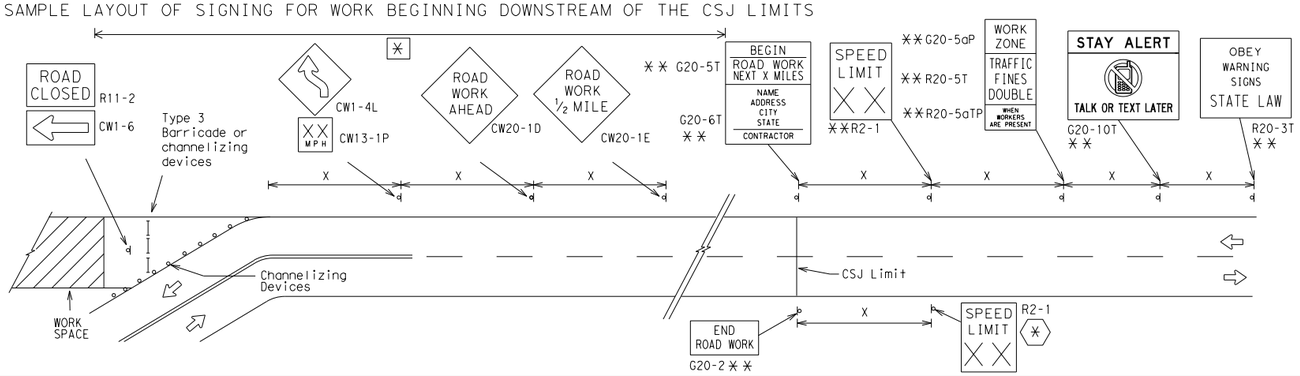

NOTES

The Contractor shall determine the appropriate distance to be placed on the G20-1 series signs and "BEGIN ROAD WORK NEXT X MILES"(G20-5T)sign for each specific project. This distance shall replace the "X" and shall be rounded to the nearest whole mile with the approval of the Engineer. No decimals shall be used.

(✳) The "BEGIN WORK ZONE"(G20-9TP) and "END WORK ZONE" (G20-2bT) shall be used as shown on the sample layout when advance signs are required outside the CSJ Limits. They inform the motorist of entering or leaving a part of the work zone lying outside the CSJ Limits where traffic fines may double if workers are present.

✳✳ Required CSJ Limit signing. See Note 10 on BC(1). TRAFFIC FINES DOUBLE signs will not be required on projects consisting solely of mobile operations work.

✳ Area for placement of "ROAD WORK AHEAD" (CW20-1D)sign and other signs or devices as called for on the Traffic Control Plan.

(✳) Contractor will install a regulatory speed limit sign at the end of the work zone.

LEGEND	
⊢⊣	Type 3 Barricade
○ ○ ○	Channelizing Devices
▬	Sign
X	See Typical Construction Warning Sign Size and Spacing chart or the TMUTCD for sign spacing requirements.

Texas Department of Transportation

Traffic Operations Division Standard

BARRICADE AND CONSTRUCTION PROJECT LIMIT

BC(2)-14

FILE: bc-14.dgn	DN: TxDOT	CK: TxDOT	DW: TxDOT	CK: TxDOT
©TxDOT November 2002	CONT	SECT	JOB	HIGHWAY
REVISIONS				KLEIN RD
9-07 8-14	DIST	COUNTY		SHEET NO.
7-13	SAT	GUADALUPE		94

TYPICAL APPLICATION OF WORK ZONE SPEED LIMIT SIGNS

Work zone speed limits shall be regulatory, established in accordance with the "Procedures for Establishing Speed Zones," and approved by the Texas Transportation Commission, or by City Ordinance when within Incorporated City Limits.

Reduced speeds should only be posted in the vicinity of work activity and not throughout the entire project.

Regulatory work zone speed signs (R2-1) shall be removed or covered during periods when they are not needed.

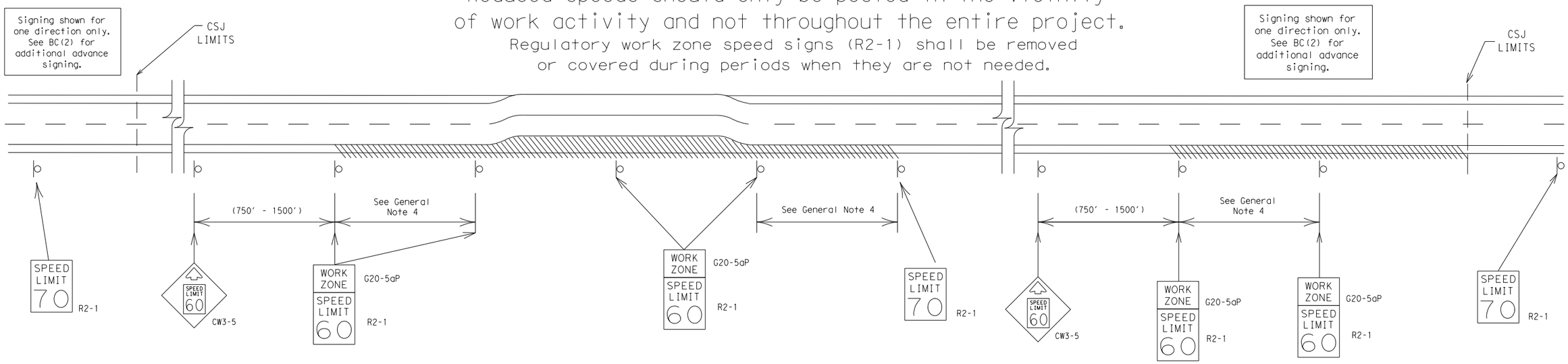

GUIDANCE FOR USE:

LONG/INTERMEDIATE TERM WORK ZONE SPEED LIMITS

This type of work zone speed limit should be included on the design of the traffic control plans when restricted geometrics with a lower design speed are present in the work zone and modification of the geometrics to a higher design speed is not feasible.

Long/Intermediate Term Work Zone Speed Limit signs, when approved as described above, should be posted and visible to the motorist when work activity is present. Work activity may also be defined as a change in the roadway that requires a reduced speed for motorists to safely negotiate the work area, including:

a) rough road or damaged pavement surface
b) substantial alteration of roadway geometrics (diversions)
c) construction detours
d) grade
e) width
f) other conditions readily apparent to the driver

As long as any of these conditions exist, the work zone speed limit signs should remain in place.

SHORT TERM WORK ZONE SPEED LIMITS

This type of work zone speed limit may be included on the design of the traffic control plans when workers or equipment are not behind concrete barrier, when work activity is within 10 feet of the traveled way or actually in the travelled way.

Short Term Work Zone Speed Limit signs should be posted and visible to the motorists only when work activity is present. When work activity is not present, signs shall be removed or covered.
(See Removing or Covering on BC(4)).

GENERAL NOTES

1. Regulatory work zone speed limits should be used only for sections of construction projects where speed control is of major importance.
2. Regulatory work zone speed limit signs shall be placed on supports at a 7 foot minimum mounting height.
3. Speed zone signs are illustrated for one direction of travel and are normally posted for each direction of travel.
4. Frequency of work zone speed limit signs should be:
   40 mph and greater 0.2 to 2 miles
   35 mph and less 0.2 to 1 mile
5. Regulatory speed limit signs shall have black legend and border on a white reflective background (See "Reflective Sheeting" on BC(4)).
6. Fabrication, erection and maintenance of the"ADVANCE SPEED LIMIT"(CW3-5)sign, "WORK ZONE"(G20-5aP) plaque and the "SPEED LIMIT"(R2-1)signs shall not be paid for directly, but shall be considered subsidiary to Item 502.
7. Turning signs from view, laying signs over or down will not be allowed, unless as otherwise noted under "REMOVING OR COVERING" on BC(4).
8. Techniques that may help reduce traffic speeds include but are not limited to:
   A. Law enforcement.
   B. Flagger stationed next to sign.
   C. Portable changeable message sign (PCMS).
   D. Low-power (drone) radar transmitter.
   E. Speed monitor trailers or signs.
9. Speeds shown on details above are for illustration only. Work Zone Speed Limits should only be posted as approved for each project.
10. For more specific guidance concerning the type of work, work zone conditions and factors impacting allowable regulatory construction speed zone reduction see TxDOT form #1204 in the TxDOT e-form system.

DISCLAIMER:
The use of this standard is governed by the "Texas Engineering Practice Act". No warranty of any kind is made by TxDOT for any purpose whatsoever. TxDOT assumes no responsibility for the conversion of this standard to other formats or for incorrect results or damages resulting from its use.

DATE: 1/9/2020 3:42:17 PM
FILE: H:\projects\5101X30X03\Design\Civil\Standards\TCP\bc-14.dgn

SHEET 3 OF 12

Texas Department of Transportation

Traffic Operations Division Standard

BARRICADE AND CONSTRUCTION WORK ZONE SPEED LIMIT

BC(3)-14

FILE: bc-14.dgn	DN: TxDOT	CK: TxDOT	DW: TxDOT	CK: TxDOT
©TxDOT November 2002	CONT	SECT	JOB	HIGHWAY
REVISIONS 9-07 8-14 7-13				KLEIN RD
	DIST	COUNTY		SHEET NO.
	SAT	GUADALUPE		95

97

DISCLAIMER:
The use of this standard is governed by the "Texas Engineering Practice Act". No warranty of any kind is made by TxDOT for any purpose whatsoever. TxDOT assumes no responsibility for the conversion of this standard to other formats or for incorrect results or damages resulting from its use.

TYPICAL MINIMUM CLEARANCES FOR LONG TERM AND INTERMEDIATE TERM SIGNS

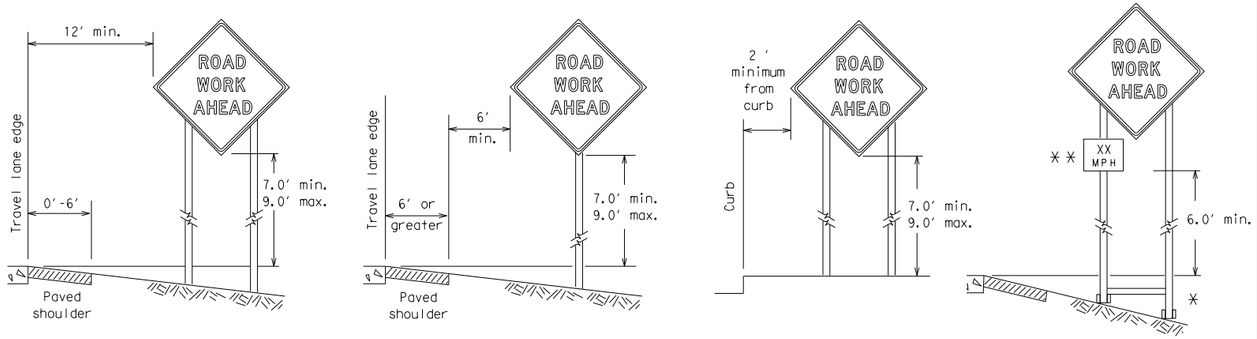

⚹ When placing skid supports on unlevel ground, the leg post lengths must be adjusted so the sign appears straight and plumb. Objects shall NOT be placed under skids as a means of leveling.

⚹⚹ When plaques are placed on dual-leg supports, they should be attached to the upright nearest the travel lane. Supplemental plaques (advisory or distance) should not cover the surface of the parent sign.

ATTACHMENT FOR SIGN SUPPORTS

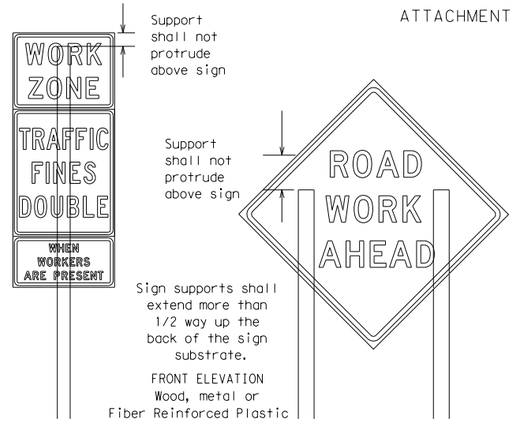

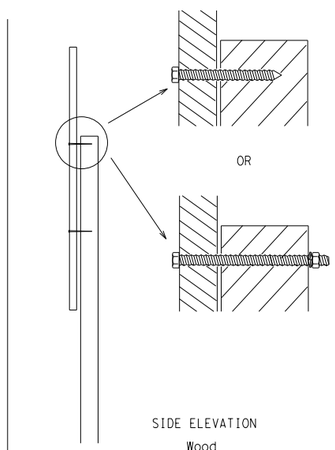

Attachment to wooden supports will be by bolts and nuts or screws. Use TxDOT's or manufacturer's recommended procedures for attaching sign substrates to other types of sign supports

Nails shall NOT be allowed. Each sign shall be attached directly to the sign support. Multiple signs shall not be joined or spliced by any means. Wood supports shall not be extended or repaired by splicing or other means.

Splicing embedded perforated square metal tubing in order to extend post height will only be allowed when the splice is made using four bolts, two above and two below the spice point. Splice must be located entirely behind the sign substrate, not near the base of the support. Splice insert lengths should be at least 5 times nominal post size, centered on the splice and of at least the same gauge material.

STOP/SLOW PADDLES

1. STOP/SLOW paddles are the primary method to control traffic by flaggers. The STOP/SLOW paddle size should be 24" x 24" as detailed below.
2. When used at night, the STOP/SLOW paddle shall be retroreflectorized.
3. STOP/SLOW paddles may be attached to a staff with a minimum length of 6′ to the bottom of the sign.
4. Any lights incorporated into the STOP or SLOW paddle faces shall only be as specifically described in Section 6E.03 Hand Signaling Devices in the TMUTCD.

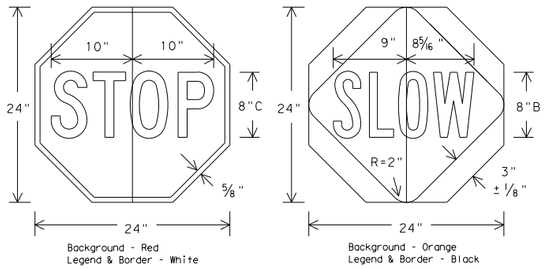

CONTRACTOR REQUIREMENTS FOR MAINTAINING PERMANENT SIGNS WITHIN THE PROJECT LIMITS

1. Permanent signs are used to give notice of traffic laws or regulations, call attention to conditions that are potentially hazardous to traffic operations, show route designations, destinations, directions, distances, services, points of interest, and other geographical, recreational, or cultural information. Drivers proceeding through a work zone need the same, if not better route guidance as normally installed on a roadway without construction.
2. When permanent regulatory or warning signs conflict with work zone conditions, remove or cover the permanent signs until the permanent sign message matches the roadway condition.
3. When existing permanent signs are moved and relocated due to construction purposes, they shall be visible to motorists at all times.
4. If existing signs are to be relocated on their original supports, they shall be installed on crashworthy bases as shown on the SMD Standard sheets. The signs shall meet the required mounting heights shown on the BC Sheets or the SMD Standards. This work should be paid for under the appropriate pay item for relocating existing signs.
5. If permanent signs are to be removed and relocated using temporary supports, the Contractor shall use crashworthy supports as shown on the BC sheets or the CWZTCD. The signs shall meet the required mounting heights shown on the BC Sheets or the SMD Standards during construction. This work should be paid for under the appropriate pay item for relocating existing signs.
6. Any sign or traffic control device that is struck or damaged by the Contractor or his/her construction equipment shall be replaced as soon as possible by the Contractor to ensure proper guidance for the motorists. This will be subsidiary to Item 502.

GENERAL NOTES FOR WORK ZONE SIGNS

1. Contractor shall install and maintain signs in a straight and plumb condition and/or as directed by the Engineer.
2. Wooden sign posts shall be painted white.
3. Barricades shall NOT be used as sign supports.
4. All signs shall be installed in accordance with the plans or as directed by the Engineer. Signs shall be used to regulate, warn, and guide the traveling public safely through the work zone.
5. The Contractor may furnish either the sign design shown in the plans or in the "Standard Highway Sign Designs for Texas" (SHSD). The Engineer/Inspector may require the Contractor to furnish other work zone signs that are shown in the TMUTCD but may have been omitted from the plans. Any variation in the plans shall be documented by written agreement between the Engineer and the Contractor's Responsible Person. All changes must be documented in writing before being implemented. This can include documenting the changes in the Inspector's TxDOT diary and having both the Inspector and Contractor initial and date the agreed upon changes.
6. The Contractor shall furnish sign supports listed in the "Compliant Work Zone Traffic Control Device List" (CWZTCD). The Contractor shall install the sign support in accordance with the manufacturer's recommendations. If there is a question regarding installation procedures, the Contractor shall furnish the Engineer a copy of the manufacturer's installation recommendations so the Engineer can verify the correct procedures are being followed.
7. The Contractor is responsible for installing signs on approved supports and replacing signs with damaged or cracked substrates and/or damaged or marred reflective sheeting as directed by the Engineer/Inspector.
8. Identification markings may be shown only on the back of the sign substrate. The maximum height of letters and/or company logos used for identification shall be 1 inch.
9. The Contractor shall replace damaged wood posts. New or damaged wood sign posts shall not be spliced.

DURATION OF WORK (as defined by the "Texas Manual on Uniform Traffic Control Devices" Part 6)

1. The types of sign supports, sign mounting height, the size of signs, and the type of sign substrates can vary based on the type of work being performed. The Engineer is responsible for selecting the appropriate size sign for the type of work being performed. The Contractor is responsible for ensuring the sign support, sign mounting height and substrate meets manufacturer's recommendations in regard to crashworthiness and duration of work requirements.
   a. Long-term stationary - work that occupies a location more than 3 days.
   b. Intermediate-term stationary - work that occupies a location more than one daylight period up to 3 days, or nighttime work lasting more than one hour.
   c. Short-term stationary - daytime work that occupies a location for more than 1 hour in a single daylight period.
   d. Short, duration - work that occupies a location up to 1 hour.
   e. Mobile - work that moves continuously or intermittently (stopping for up to approximately 15 minutes.)

SIGN MOUNTING HEIGHT

1. The bottom of Long-term/Intermediate-term signs shall be at least 7 feet, but not more than 9 feet, above the paved surface, except as shown for supplemental plaques mounted below other signs.
2. The bottom of Short-term/Short Duration signs shall be a minimum of 1 foot above the pavement surface but no more than 2 feet above the ground.
3. Long-term/Intermediate-term Signs may be used in lieu of Short-term/Short Duration signing.
4. Short-term/Short Duration signs shall be used only during daylight and shall be removed at the end of the workday or raised to appropriate Long-term/Intermediate sign height.
5. Regulatory signs shall be mounted at least 7 feet, but not more than 9 feet, above the paved surface regardless of work duration.

SIZE OF SIGNS

1. The Contractor shall furnish the sign sizes shown on BC (2) unless otherwise shown in the plans or as directed by the Engineer.

SIGN SUBSTRATES

1. The Contractor shall ensure the sign substrate is installed in accordance with the manufacturer's recommendations for the type of sign support that is being used. The CWZTCD lists each substrate that can be used on the different types and models of sign supports.
2. "Mesh" type materials are NOT an approved sign substrate, regardless of the tightness of the weave.
3. All wooden individual sign panels fabricated from 2 or more pieces shall have one or more plywood cleat, 1/2" thick by 6" wide, fastened to the back of the sign and extending fully across the sign. The cleat shall be attached to the back of the sign using wood screws that do not penetrate the face of the sign panel. The screws shall be placed on both sides of the splice and spaced at 6" centers. The Engineer may approve other methods of splicing the sign face.

REFLECTIVE SHEETING

1. All signs shall be retroreflective and constructed of sheeting meeting the color and retro-reflectivity requirements of DMS-8300 for rigid signs or DMS-8310 for roll-up signs. The web address for DMS specifications is shown on BC(1).
2. White sheeting, meeting the requirements of DMS-8300 Type A, shall be used for signs with a white background.
3. Orange sheeting, meeting the requirements of DMS-8300 Type B_{FL} or Type C_{FL}, shall be used for rigid signs with orange backgrounds.

SIGN LETTERS

1. All sign letters and numbers shall be clear, and open rounded type uppercase alphabet letters as approved by the Federal Highway Administration (FHWA) and as published in the "Standard Highway Sign Design for Texas" manual. Signs, letters and numbers shall be of first class workmanship in accordance with Department Standards and Specifications.

REMOVING OR COVERING

1. When sign messages may be confusing or do not apply, the signs shall be removed or completely covered.
2. Long-term stationary or intermediate stationary signs installed on square metal tubing may be turned away from traffic 90 degrees when the sign message is not applicable. This technique may not be used for signs installed in the median of divided highways or near any intersections where the sign may be seen from approaching traffic.
3. Signs installed on wooden skids shall not be turned at 90 degree angles to the roadway. These signs should be removed or completely covered when not required.
4. When signs are covered, the material used shall be opaque, such as heavy mil black plastic, or other materials which will cover the entire sign face and maintain their opaque properties under automobile headlights at night, without damaging the sign sheeting.
5. Burlap shall NOT be used to cover signs.
6. Duct tape or other adhesive material shall NOT be affixed to a sign face.
7. Signs and anchor stubs shall be removed and holes backfilled upon completion of work.

SIGN SUPPORT WEIGHTS

1. Where sign supports require the use of weights to keep from turning over, the use of sandbags with dry, cohesionless sand should be used.
2. The sandbags will be tied shut to keep the sand from spilling and to maintain a constant weight.
3. Rock, concrete, iron, steel or other solid objects shall not be permitted for use as sign support weights.
4. Sandbags should weigh a minimum of 35 lbs and a maximum of 50 lbs.
5. Sandbags shall be made of a durable material that tears upon vehicular impact. Rubber (such as tire inner tubes) shall NOT be used.
6. Rubber ballasts designed for channelizing devices should not be used for ballast on portable sign supports. Sign supports designed and manufactured with rubber bases may be used when shown on the CWZTCD list.
7. Sandbags shall only be placed along or laid over the base supports of the traffic control device and shall not be suspended above ground level or hung with rope, wire, chains or other fasteners. Sandbags shall be placed along the length of the skids to weigh down the sign support.
8. Sandbags shall NOT be placed under the skid and shall not be used to level sign supports placed on slopes.

FLAGS ON SIGNS

1. Flags may be used to draw attention to warning signs. When used the flag shall be 16 inches square or larger and shall be orange or fluorescent red-orange in color. Flags shall not be allowed to cover any portion of the sign face.

Texas Department of Transportation

Traffic Operations Division Standard

BARRICADE AND CONSTRUCTION TEMPORARY SIGN NOTES

BC(4)-14

FILE: bc-14.dgn	DN: TxDOT	CK: TxDOT	DW: TxDOT	CK: TxDOT
© TxDOT November 2002	CONT	SECT	JOB	HIGHWAY
REVISIONS 9-07 8-14 7-13				KLEIN RD
	DIST	COUNTY		SHEET NO.
	SAT	GUADALUPE		96

DATE: 1/9/2020 3:42:17 PM
FILE: H:\projects\5107030\03\Design\Civil\Standards\TCP\bc-14.dgn

DISCLAIMER:
The use of this standard is governed by the "Texas Engineering Practice Act". No warranty of any kind is made by TxDOT for any purpose whatsoever. TxDOT assumes no responsibility for the conversion of this standard to other formats or for incorrect results or damages resulting from its use.

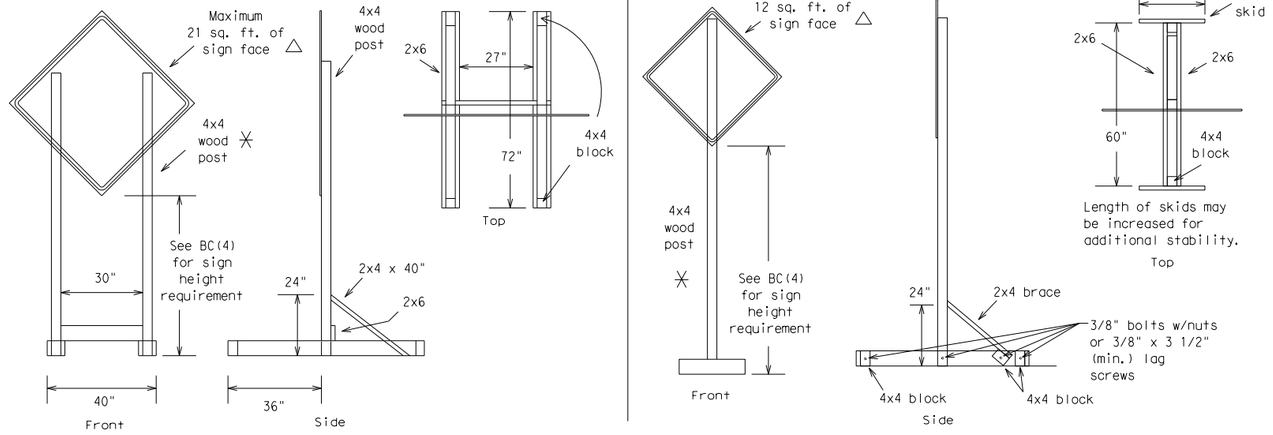

SKID MOUNTED WOOD SIGN SUPPORTS

LONG/INTERMEDIATE TERM STATIONARY - PORTABLE SKID MOUNTED SIGN SUPPORTS □

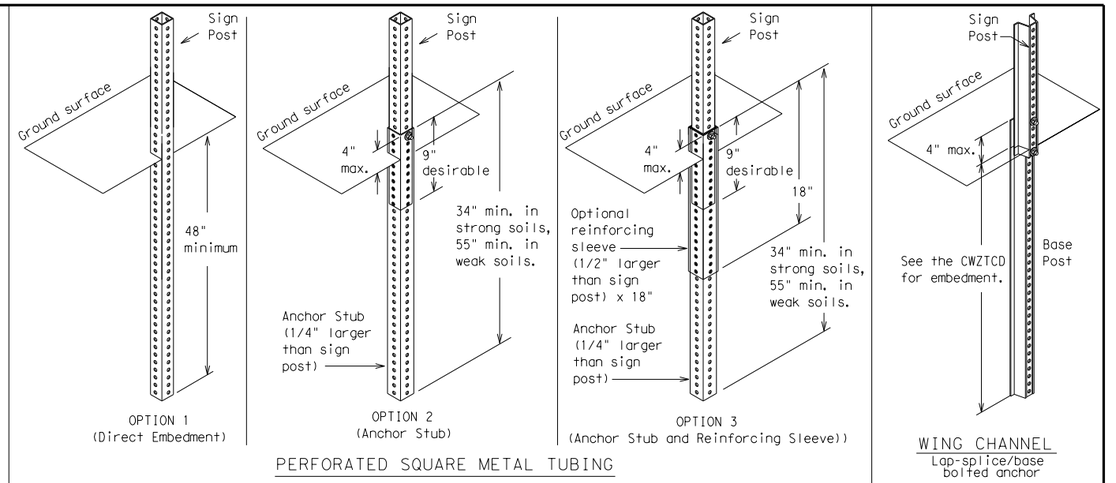

PERFORATED SQUARE METAL TUBING

GROUND MOUNTED SIGN SUPPORTS

Refer to the CWZTCD and the manufacturer's installation procedure for each type sign support.
The maximum sign square footage shall adhere to the manufacturer's recommendation.
Two post installations can be used for larger signs.

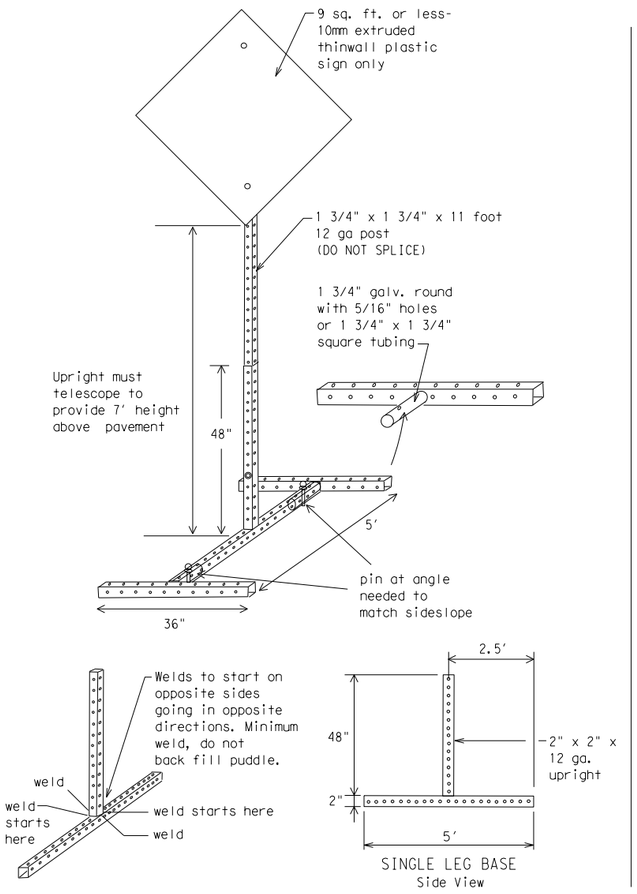

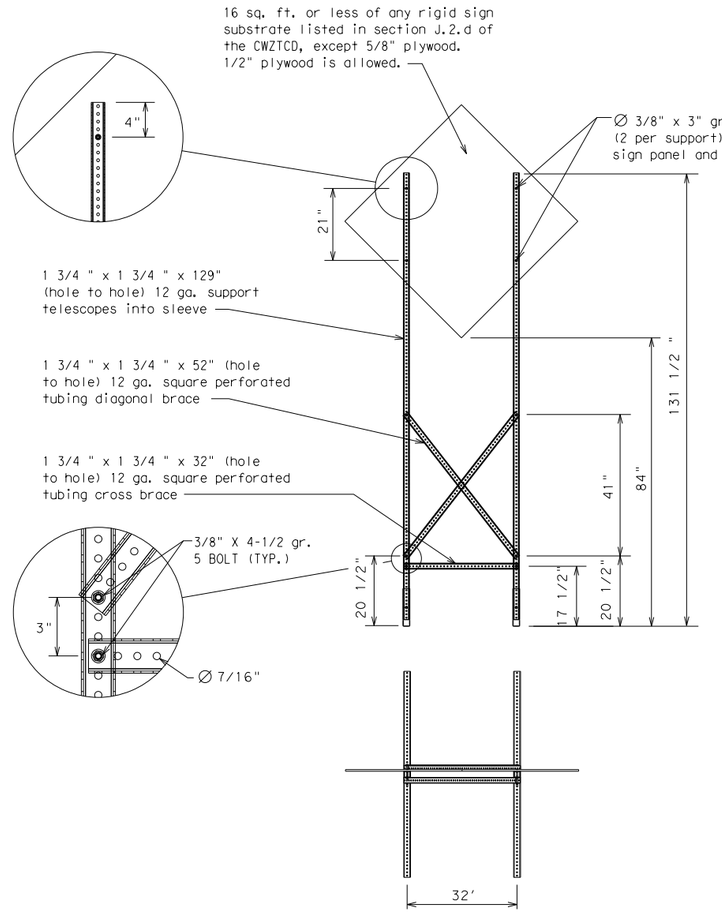

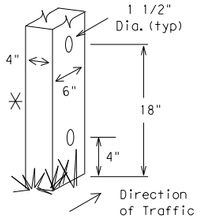

Nominal Post Size	Number of Posts	Maximum Sq. feet of Sign Face	Minimum Soil Embedment	Drilled Hole(s) Required
4 x 4	1	12	36"	NO
4 x 4	2	21	36"	NO
4 x 6	1	21	36"	YES
4 x 6	2	36	36"	YES

WOOD POST SYSTEM FOR GROUND MOUNTED SIGN SUPPORTS

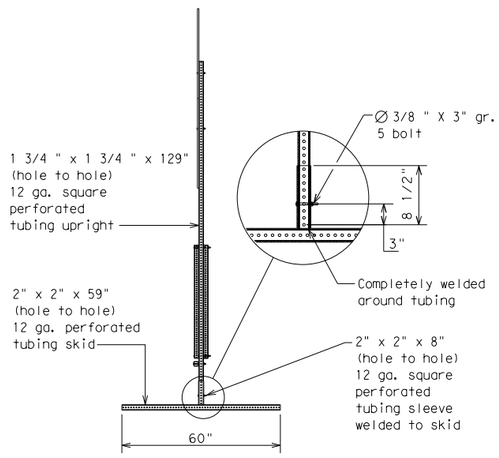

SKID MOUNTED PERFORATED SQUARE STEEL TUBING SIGN SUPPORTS

WEDGE ANCHORS

Both steel and plastic Wedge Anchor Systems as shown on the SMD Standard Sheets may be used as temporary sign supports for signs up to 10 square feet of sign face. They may be set in concrete or in sturdy soils if approved by the Engineer. (See web address for "Traffic Engineering Standard Sheets" on BC(1)).

OTHER DESIGNS

MORE DETAILS OF APPROVED LONG/INTERMEDIATE AND SHORT TERM SUPPORTS CAN BE FOUND ON THE CWZTCD LIST. SEE BC(1) FOR WEBSITE LOCATION.

GENERAL NOTES

1. Nails may be used in the assembly of wooden sign supports, but 3/8" bolts with nuts or 3/8" x 3 1/2" lag screws must be used on every joint for final connection.
2. No more than 2 sign posts shall be placed within a 7 ft. circle, except for specific materials noted on the CWZTCD List.
3. When project is completed, all sign supports and foundations shall be removed from the project site. This will be considered subsidiary to Item 502.

□ See BC(4) for definition of "Work Duration."

✳ Wood sign posts MUST be one piece. Splicing will NOT be allowed. Posts shall be painted white.

△ See the CWZTCD for the type of sign substrate that can be used for each approved sign support.

Texas Department of Transportation | Traffic Operations Division Standard

BARRICADE AND CONSTRUCTION TYPICAL SIGN SUPPORT

BC(5)-14

FILE: bc-14.dgn	DN: TxDOT	CK: TxDOT	DW: TxDOT	CK: TxDOT
©TxDOT November 2002	CONT	SECT	JOB	HIGHWAY
REVISIONS 9-07 8-14 7-13				KLEIN RD
	DIST	COUNTY		SHEET NO.
	SAT	GUADALUPE		97

99

DATE: 1/9/2020 3:42:18 PM
FILE: H:\projects\510\30\03\Design\Civil\Standards\TCP\bc-14.dgn

DISCLAIMER:
The use of this standard is governed by the "Texas Engineering Practice Act". No warranty of any kind is made by TxDOT for any purpose whatsoever. TxDOT assumes no responsibility for the conversion of this standard to other formats or for incorrect results or damages resulting from its use.

WHEN NOT IN USE, REMOVE THE PCMS FROM THE RIGHT-OF-WAY OR PLACE THE PCMS BEHIND BARRIER OR GUARDRAIL WITH SIGN PANEL TURNED PARALLEL TO TRAFFIC

PORTABLE CHANGEABLE MESSAGE SIGNS

1. The Engineer/Inspector shall approve all messages used on portable changeable message signs (PCMS).
2. Messages on PCMS should contain no more than 8 words (about four to eight characters per word), not including simple words such as "TO," "FOR," "AT," etc.
3. Messages should consist of a single phase, or two phases that alternate. Three-phase messages are not allowed. Each phase of the message should convey a single thought, and must be understood by itself.
4. Use the word "EXIT" to refer to an exit ramp on a freeway; i.e., "EXIT CLOSED." Do not use the term "RAMP."
5. Always use the route or interstate designation (IH, US, SH, FM) along with the number when referring to a roadway.
6. When in use the bottom of a stationary PCMS message panel should be a minimum 7 feet above the roadway, where possible.
7. The message term "WEEKEND" should be used only if the work is to start on Saturday morning and end by Sunday evening at midnight. Actual days and hours of work should be displayed on the PCMS if work is to begin on Friday evening and/or continue into Monday morning.
8. The Engineer/Inspector may select one of two options which are available for displaying a two-phase message on a PCMS. Each phase may be displayed for either four seconds each or for three seconds each.
9. Do not "flash" messages or words included in a message. The message should be steady burn or continuous while displayed.
10. Do not present redundant information on a two-phase message; i.e., keeping two lines of the message the same and changing the third line.
11. Do not use the word "Danger" in message.
12. Do not display the message "LANES SHIFT LEFT" or "LANES SHIFT RIGHT" on a PCMS. Drivers do not understand the message.
13. Do not display messages that scroll horizontally or vertically across the face of the sign.
14. The following table lists abbreviated words and two-word phrases that are acceptable for use on a PCMS. Both words in a phrase must be displayed together. Words or phrases not on this list should not be abbreviated, unless shown in the TMUTCD.
15. PCMS character height should be at least 18 inches for trailer mounted units. They should be visible from at least 1/2 (.5) mile and the text should be legible from at least 600 feet at night and 800 feet in daylight. Truck mounted units must have a character height of 10 inches and must be legible from at least 400 feet.
16. Each line of text should be centered on the message board rather than left or right justified.
17. If disabled, the PCMS should default to an illegible display that will not alarm motorists and will only be used to alert workers that the PCMS has malfunctioned. A pattern such as a series of horizontal solid bars is appropriate.

WORD OR PHRASE	ABBREVIATION
Access Road	ACCS RD
Alternate	ALT
Avenue	AVE
Best Route	BEST RTE
Boulevard	BLVD
Bridge	BRDG
Cannot	CANT
Center	CTR
Construction Ahead	CONST AHD
CROSSING	XING
Detour Route	DETOUR RTE
Do Not	DONT
East	E
Eastbound	(route) E
Emergency	EMER
Emergency Vehicle	EMER VEH
Entrance, Enter	ENT
Express Lane	EXP LN
Expressway	EXPWY
XXXX Feet	XXXX FT
Fog Ahead	FOG AHD
Freeway	FRWY, FWY
Freeway Blocked	FWY BLKD
Friday	FRI
Hazardous Driving	HAZ DRIVING
Hazardous Material	HAZMAT
High-Occupancy	HOV
Vehicle Highway	HWY
Hour(s)	HR, HRS
Information	INFO
It Is	ITS
Junction	JCT
Left	LFT
Left Lane	LFT LN
Lane Closed	LN CLOSED
Lower Level	LWR LEVEL
Maintenance	MAINT

WORD OR PHRASE	ABBREVIATION
Major	MAJ
Miles	MI
Miles Per Hour	MPH
Minor	MNR
Monday	MON
Normal	NORM
North	N
Northbound	(route) N
Parking	PKING
Road	RD
Right Lane	RT LN
Saturday	SAT
Service Road	SERV RD
Shoulder	SHLDR
Slippery	SLIP
South	S
Southbound	(route) S
Speed	SPD
Street	ST
Sunday	SUN
Telephone	PHONE
Temporary	TEMP
Thursday	THURS
To Downtown	TO DWNTN
Traffic	TRAF
Travelers	TRVLRS
Tuesday	TUES
Time Minutes	TIME MIN
Upper Level	UPR LEVEL
Vehicles (s)	VEH, VEHS
Warning	WARN
Wednesday	WED
Weight Limit	WT LIMIT
West	W
Westbound	(route) W
Wet Pavement	WET PVMT
Will Not	WONT

Roadway designation # IH-number, US-number, SH-number, FM-number

RECOMMENDED PHASES AND FORMATS FOR PCMS MESSAGES DURING ROADWORK ACTIVITIES

(The Engineer may approve other messages not specifically covered here.)

Phase 1: Condition Lists

Road/Lane/Ramp Closure List

- FREEWAY CLOSED X MILE
- FRONTAGE ROAD CLOSED
- ROAD CLOSED AT SH XXX
- SHOULDER CLOSED XXX FT
- ROAD CLSD AT FM XXXX
- RIGHT LN CLOSED XXX FT
- RIGHT X LANES CLOSED
- RIGHT X LANES OPEN
- CENTER LANE CLOSED
- DAYTIME LANE CLOSURES
- NIGHT LANE CLOSURES
- I-XX SOUTH EXIT CLOSED
- VARIOUS LANES CLOSED
- EXIT XXX CLOSED X MILE
- EXIT CLOSED
- RIGHT LN TO BE CLOSED
- MALL DRIVEWAY CLOSED
- X LANES CLOSED TUE - FRI
- XXXXXXXX BLVD CLOSED

Other Condition List

- ROADWORK XXX FT
- ROAD REPAIRS XXXX FT
- FLAGGER XXXX FT
- LANE NARROWS XXXX FT
- RIGHT LN NARROWS XXXX FT
- TWO-WAY TRAFFIC XX MILE
- MERGING TRAFFIC XXXX FT
- CONST TRAFFIC XXX FT
- LOOSE GRAVEL XXXX FT
- UNEVEN LANES XXXX FT
- DETOUR X MILE
- ROUGH ROAD XXXX FT
- ROADWORK PAST SH XXXX
- ROADWORK NEXT FRI-SUN
- BUMP XXXX FT
- US XXX EXIT X MILES
- TRAFFIC SIGNAL XXXX FT
- LANES SHIFT *

* LANES SHIFT in Phase 1 must be used with STAY IN LANE in Phase 2.

Phase 2: Possible Component Lists

Action to Take/Effect on Travel List

- MERGE RIGHT
- FORM X LINES RIGHT
- DETOUR NEXT X EXITS
- USE XXXXX RD EXIT
- USE EXIT XXX
- USE EXIT I-XX NORTH
- STAY ON US XXX SOUTH
- USE I-XX E TO I-XX N
- TRUCKS USE US XXX N
- WATCH FOR TRUCKS
- WATCH FOR TRUCKS
- EXPECT DELAYS
- EXPECT DELAYS
- PREPARE TO STOP
- REDUCE SPEED XXX FT
- END SHOULDER USE
- USE OTHER ROUTES
- WATCH FOR WORKERS
- STAY IN LANE *

Location List

- AT FM XXXX
- BEFORE RAILROAD CROSSING
- NEXT X MILES
- PAST US XXX EXIT
- XXXXXXX TO XXXXXXX
- US XXX TO FM XXXX

Warning List

- SPEED LIMIT XX MPH
- MAXIMUM SPEED XX MPH
- MINIMUM SPEED XX MPH
- ADVISORY SPEED XX MPH
- RIGHT LANE EXIT
- USE CAUTION
- DRIVE SAFELY
- DRIVE WITH CARE

** Advance Notice List

- TUE-FRI XX AM- X PM
- APR XX-XX X PM-X AM
- BEGINS MONDAY
- BEGINS MAY XX
- MAY X-X XX PM - XX AM
- NEXT FRI-SUN
- XX AM TO XX PM
- NEXT TUE AUG XX
- TONIGHT XX PM- XX AM

* LANES SHIFT in Phase 1 must be used with STAY IN LANE in Phase 2.

** See Application Guidelines Note 6.

APPLICATION GUIDELINES

1. Only 1 or 2 phases are to be used on a PCMS.
2. The 1st phase (or both) should be selected from the "Road/Lane/Ramp Closure List" and the "Other Condition List".
3. A 2nd phase can be selected from the "Action to Take/Effect on Travel, Location, General Warning, or Advance Notice Phase Lists".
4. A Location Phase is necessary only if a distance or location is not included in the first phase selected.
5. If two PCMS are used in sequence, they must be separated by a minimum of 1000 ft. Each PCMS shall be limited to two phases, and should be understandable by themselves.
6. For advance notice, when the current date is within seven days of the actual work date, calendar days should be replaced with days of the week. Advance notification should typically be for no more than one week prior to the work.

WORDING ALTERNATIVES

1. The words RIGHT, LEFT and ALL can be interchanged as appropriate.
2. Roadway designations IH, US, SH, FM and LP can be interchanged as appropriate.
3. EAST, WEST, NORTH and SOUTH (or abbreviations E, W, N and S) can be interchanged as appropriate.
4. Highway names and numbers replaced as appropriate.
5. ROAD, HIGHWAY and FREEWAY can be interchanged as needed.
6. AHEAD may be used instead of distances if necessary.
7. FT and MI, MILE and MILES interchanged as appropriate.
8. AT, BEFORE and PAST interchanged as needed.
9. Distances or AHEAD can be eliminated from the message if a location phase is used.

PCMS SIGNS WITHIN THE R.O.W. SHALL BE BEHIND GUARDRAIL OR CONCRETE BARRIER OR SHALL HAVE A MINIMUM OF FOUR (4) PLASTIC DRUMS PLACED PERPENDICULAR TO TRAFFIC ON THE UPSTREAM SIDE OF THE PCMS, WHEN EXPOSED TO ONE DIRECTION OF TRAFFIC. WHEN EXPOSED TO TWO WAY TRAFFIC, THE FOUR DRUMS SHOULD BE PLACED WITH ONE DRUM AT EACH OF THE FOUR CORNERS OF THE UNIT.

FULL MATRIX PCMS SIGNS

1. When Full Matrix PCMS signs are used, the character height and legibility/visibility requirements shall be maintained as listed in Note 15 under "PORTABLE CHANGEABLE MESSAGE SIGNS" above.
2. When symbol signs, such as the "Flagger Symbol"(CW20-7) are represented graphically on the Full Matrix PCMS sign and, with the approval of the Engineer, it shall maintain the legibility/visibility requirement listed above.
3. When symbol signs are represented graphically on the Full Matrix PCMS, they shall only supplement the use of the static sign represented, and shall not substitute for, or replace that sign.
4. A full matrix PCMS may be used to simulate a flashing arrow board provided it meets the visibility, flash rate and dimming requirements on BC(7), for the same size arrow.

Texas Department of Transportation — Traffic Operations Division Standard

BARRICADE AND CONSTRUCTION PORTABLE CHANGEABLE MESSAGE SIGN (PCMS)

BC(6)-14

FILE:	bc-14.dgn	DN: TxDOT	CK: TxDOT	DW: TxDOT	CK: TxDOT
© TxDOT	November 2002	CONT	SECT	JOB	HIGHWAY
REVISIONS					KLEIN RD
9-07	8-14	DIST	COUNTY		SHEET NO.
7-13		SAT	GUADALUPE		98

100

DATE: 1/9/2020 3:42:18 PM
FILE: H:\projects\5103038\03\Design\Civil\Standards\TCP\bc-14.dgn

DISCLAIMER:
The use of this standard is governed by the "Texas Engineering Practice Act". No warranty of any kind is made by TxDOT for any purpose whatsoever. TxDOT assumes no responsibility for the conversion of this standard to other formats or for incorrect results or damages resulting from its use.

1. Barrier Reflectors shall be pre-qualified, and conform to the color and reflectivity requirements of DMS-8600. A list of prequalified Barrier Reflectors can be found at the Material Producer List web address shown on BC(1).
2. Color of Barrier Reflectors shall be as specified in the TMUTCD. The cost of the reflectors shall be considered subsidiary to Item 512.

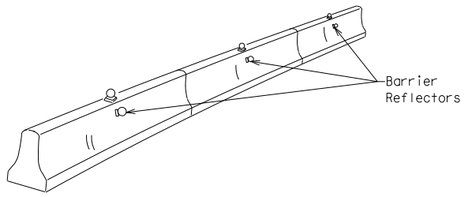

CONCRETE TRAFFIC BARRIER (CTB)

3. Where traffic is on one side of the CTB, two (2) Barrier Reflectors shall be mounted in approximately the midsection of each section of CTB. An alternate mounting location is uniformly spaced at one end of each CTB. This will allow for attachment of a barrier grapple without damaging the reflector. The Barrier Reflector mounted on the side of the CTB shall be located directly below the reflector mounted on top of the barrier, as shown in the detail above.
4. Where CTB separates two-way traffic, three barrier reflectors shall be mounted on each section of CTB. The reflector unit on top shall have two yellow reflective faces (Bi-Directional)while the reflectors on each side of the barrier shall have one yellow reflective face, as shown in the detail above.
5. When CTB separates traffic traveling in the same direction, no barrier reflectors will be required on top of the CTB.
6. Barrier Reflector units shall be yellow or white in color to match the edgeline being supplemented.
7. Maximum spacing of Barrier Reflectors is forty (40) feet.
8. Pavement markers or temporary flexible-reflective roadway marker tabs shall NOT be used as CTB delineation.
9. Attachment of Barrier Reflectors to CTB shall be per manufacturer's recommendations.
10. Missing or damaged Barrier Reflectors shall be replaced as directed by the Engineer.
11. Single slope barriers shall be delineated as shown on the above detail.

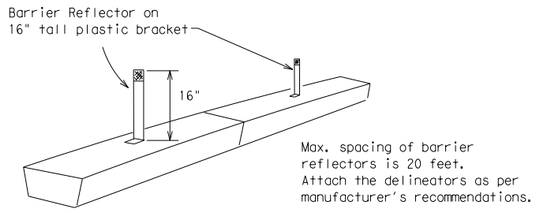

LOW PROFILE CONCRETE BARRIER (LPCB)

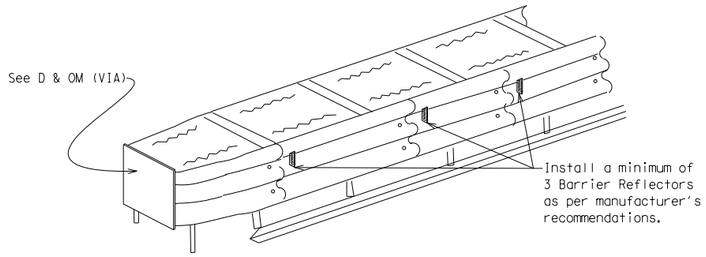

DELINEATION OF END TREATMENTS

END TREATMENTS FOR
CTB'S USED
IN WORK ZONES

End treatments used on CTB's in work zones shall meet crashworthy standards as defined in the National Cooperative Highway Research Report 350. Refer to the CWZTCD List for approved end treatments and manufacturers.

BARRIER REFLECTORS FOR CONCRETE TRAFFIC BARRIER AND ATTENUATORS

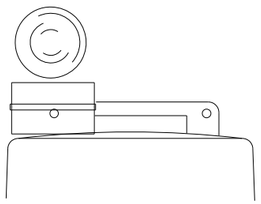

Type C Warning Light or approved substitute mounted on a drum adjacent to the travel way.

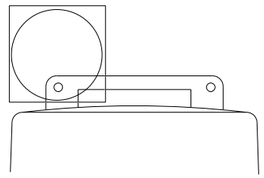

Warning reflector may be round or square.Must have a yellow reflective surface area of at least 30 square inches

WARNING LIGHTS

1. Warning lights shall meet the requirements of the TMUTCD.
2. Warning lights shall NOT be installed on barricades.
3. Type A-Low Intensity Flashing Warning Lights are commonly used with drums. They are intended to warn of or mark a potentially hazardous area. Their use shall be as indicated on this sheet and/or other sheets of the plans by the designation "FL". The Type A Warning Lights shall not be used with signs manufactured with Type B_{FL} or C_{FL} Sheeting meeting the requirements of Departmental Material Specification DMS-8300.
4. Type-C and Type D 360 degree Steady Burn Lights are intended to be used in a series for delineation to supplement other traffic control devices. Their use shall be as indicated on this sheet and/or other sheets of the plans by the designation "SB".
5. The Engineer/Inspector or the plans shall specify the location and type of warning lights to be installed on the traffic control devices.
6. When required by the Engineer, the Contractor shall furnish a copy of the warning lights certification. The warning light manufacturer will certify the warning lights meet the requirements of the latest ITE Purchase Specifications for Flashing and Steady-Burn Warning Lights.
7. When used to delineate curves, Type-C and Type D Steady Burn Lights should only be placed on the outside of the curve, not the inside.
8. The location of warning lights and warning reflectors on drums shall be as shown elsewhere in the plans.

WARNING LIGHTS MOUNTED ON PLASTIC DRUMS

1. Type A flashing warning lights are intended to warn drivers that they are approaching or are in a potentially hazardous area.
2. Type A random flashing warning lights are not intended for delineation and shall not be used in a series.
3. A series of sequential flashing warning lights placed on channelizing devices to form a merging taper may be used for delineation. If used, the successive flashing of the sequential warning lights should occur from the beginning of the taper to the end of the merging taper in order to identify the desired vehicle path. The rate of flashing for each light shall be 65 flashes per minute, plus or minus 10 flashes.
4. Type C and D steady-burn warning lights are intended to be used in a series to delineate the edge of the travel lane on detours, on lane changes, on lane closures, and on other similar conditions.
5. Type A, Type C and Type D warning lights shall be installed at locations as detailed on other sheets in the plans.
6. Warning lights shall not be installed on a drum that has a sign, chevron or vertical panel.
7. The maximum spacing for warning lights on drums should be identical to the channelizing device spacing.

WARNING REFLECTORS MOUNTED ON PLASTIC DRUMS AS A SUBSTITUTE FOR TYPE C (STEADY BURN) WARNING LIGHTS

1. A warning reflector or approved substitute may be mounted on a plastic drum as a substitute for a Type C, steady burn warning light at the discretion of the Contractor unless otherwise noted in the plans.
2. The warning reflector shall be yellow in color and shall be manufactured using a sign substrate approved for use with plastic drums listed on the CWZTCD.
3. The warning reflector shall have a minimum retroreflective surface area (one-side) of 30 square inches.
4. Round reflectors shall be fully reflectorized, including the area where attached to the drum.
5. Square substrates must have a minimum of 30 square inches of reflectorized sheeting. They do not have to be reflectorized where it attaches to the drum.
6. The side of the warning reflector facing approaching traffic shall have sheeting meeting the color and retroreflectivity requirements for DMS 8300-Type B or Type C.
7. When used near two-way traffic, both sides of the warning reflector shall be reflectorized.
8. The warning reflector should be mounted on the side of the handle nearest approaching traffic.
9. The maximum spacing for warning reflectors should be identical to the channelizing device spacing requirements.

Arrow Boards may be located behind channelizing devices in place for a shoulder taper or merging taper, otherwise they shall be delineated with four (4) channelizing devices placed perpendicular to traffic on the upstream side of traffic.

1. The Flashing Arrow Board should be used for all lane closures on multi-lane roadways, or slow moving maintenance or construction activities on the travel lanes.
2. Flashing Arrow Boards should not be used on two-lane, two-way roadways, detours, diversions or work on shoulders unless the "CAUTION" display (see detail below) is used.
3. The Engineer/Inspector shall choose all appropriate signs, barricades and/or other traffic control devices that should be used in conjunction with the Flashing Arrow Board.
4. The Flashing Arrow Board should be able to display the following symbols:

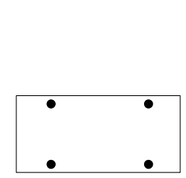

4 CORNER CAUTION

OR

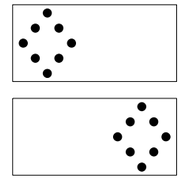

ALTERNATING DIAMOND CAUTION

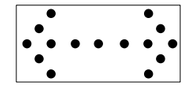

DOUBLE ARROW

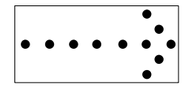

LEFT & RIGHT

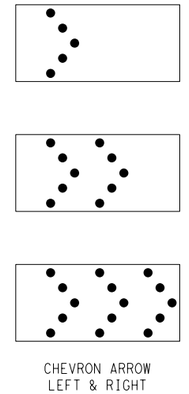

CHEVRON ARROW
LEFT & RIGHT

5. The "CAUTION" display consists of four corner lamps flashing simultaneously, or the Alternating Diamond Caution mode as shown.
6. The straight line caution display is NOT ALLOWED.
7. The Flashing Arrow Board shall be capable of minimum 50 percent dimming from rated lamp voltage. The flashing rate of the lamps shall not be less than 25 nor more than 40 flashes per minute.
8. Minimum lamp "on time" shall be approximately 50 percent for the flashing arrow and equal intervals of 25 percent for each sequential phase of the flashing chevron.
9. The sequential arrow display is NOT ALLOWED.
10. The flashing arrow display is the TxDOT standard; however, the sequential Chevron display may be used during daylight operations.
11. The Flashing Arrow Board shall be mounted on a vehicle, trailer or other suitable support.
12. A Flashing Arrow Board SHALL NOT BE USED to laterally shift traffic.
13. A full matrix PCMS may be used to simulate a Flashing Arrow Board provided it meets visibility, flash rate and dimming requirements on this sheet for the same size arrow.
14. Minimum mounting height of trailer mounted Arrow Boards should be 7 feet from roadway to bottom of panel.

REQUIREMENTS			
TYPE	MINIMUM SIZE	MINIMUM NUMBER OF PANEL LAMPS	MINIMUM VISIBILITY DISTANCE
B	30 x 60	13	3/4 mile
C	48 x 96	15	1 mile

ATTENTION
Flashing Arrow Boards shall be equipped with automatic dimming devices.

WHEN NOT IN USE, REMOVE THE ARROW BOARD FROM THE RIGHT-OF-WAY OR PLACE THE ARROW BOARD BEHIND CONCRETE TRAFFIC BARRIER OR GUARDRAIL.

FLASHING ARROW BOARDS

TRUCK-MOUNTED ATTENUATORS

1. Truck-mounted attenuators (TMA) used on TxDOT facilities must meet the requirements outlined in the National Cooperative Highway Research Report No. 350 (NCHRP 350) or the Manual for Assessing Safety Hardware (MASH).
2. Refer to the CWZTCD for the requirements of Level 2 or Level 3 TMAs.
3. Refer to the CWZTCD for a list of approved TMAs.
4. TMAs are required on freeways unless otherwise noted in the plans.
5. A TMA should be used anytime that it can be positioned 30 to 100 feet in advance of the area of crew exposure without adversely affecting the work performance.
6. The only reason a TMA should not be required is when a work area is spread down the roadway and the work crew is an extended distance from the TMA.

Texas Department of Transportation

Traffic Operations Division Standard

BARRICADE AND CONSTRUCTION ARROW PANEL, REFLECTORS, WARNING LIGHTS & ATTENUATOR

BC(7)-14

FILE: bc-14.dgn	DN: TxDOT	CK: TxDOT	DW: TxDOT	CK: TxDOT
© TxDOT November 2002	CONT	SECT	JOB	HIGHWAY
REVISIONS				KLEIN RD
9-07 8-14	DIST	COUNTY		SHEET NO.
7-13	SAT	GUADALUPE		99

101

DATE: 1/9/2020 3:42:19 PM
FILE: H:\projects\510\30\03\Design\Civil\Standards\TCP\bc-14.dgn

DISCLAIMER:
The use of this standard is governed by the "Texas Engineering Practice Act". No warranty of any kind is made by TxDOT for any purpose whatsoever. TxDOT assumes no responsibility for the conversion of this standard to other formats or for incorrect results or damages resulting from its use.

GENERAL NOTES

1. For long term stationary work zones on freeways, drums shall be used as the primary channelizing device.
2. For intermediate term stationary work zones on freeways, drums should be used as the primary channelizing device but may be replaced in tangent sections by vertical panels, or 42" two-piece cones. In tangent sections one-piece cones may be used with the approval of the Engineer but only if personnel are present on the project at all times to maintain the cones in proper position and location.
3. For short term stationary work zones on freeways, drums are the preferred channelizing device but may be replaced in tapers, transitions and tangent sections by vertical panels, two-piece cones or one-piece cones as approved by the Engineer.
4. Drums and all related items shall comply with the requirements of the current version of the "Texas Manual on Uniform Traffic Control Devices" (TMUTCD) and the "Compliant Work Zone Traffic Control Devices List" (CWZTCD).
5. Drums, bases, and related materials shall exhibit good workmanship and shall be free from objectionable marks or defects that would adversely affect their appearance or serviceability.
6. The Contractor shall have a maximum of 24 hours to replace any plastic drums identified for replacement by the Engineer/Inspector. The replacement device must be an approved device.

GENERAL DESIGN REQUIREMENTS

Pre-qualified plastic drums shall meet the following requirements:

1. Plastic drums shall be a two-piece design; the "body" of the drum shall be the top portion and the "base" shall be the bottom.
2. The body and base shall lock together in such a manner that the body separates from the base when impacted by a vehicle traveling at a speed of 20 MPH or greater but prevents accidental separation due to normal handling and/or air turbulence created by passing vehicles.
3. Plastic drums shall be constructed of lightweight flexible, and deformable materials. The Contractor shall NOT use metal drums or single piece plastic drums as channelization devices or sign supports.
4. Drums shall present a profile that is a minimum of 18 inches in width at the 36 inch height when viewed from any direction. The height of drum unit (body installed on base) shall be a minimum of 36 inches and a maximum of 42 inches.
5. The top of the drum shall have a built-in handle for easy pickup and shall be designed to drain water and not collect debris. The handle shall have a minimum of two widely spaced 9/16 inch diameter holes to allow attachment of a warning light, warning reflector unit or approved compliant sign.
6. The exterior of the drum body shall have a minimum of four alternating orange and white retroreflective circumferential stripes not less than 4 inches nor greater than 8 inches in width. Any non-reflectorized space between any two adjacent stripes shall not exceed 2 inches in width.
7. Bases shall have a maximum width of 36 inches, a maximum height of 4 inches, and a minimum of two footholds of sufficient size to allow base to be held down while separating the drum body from the base.
8. Plastic drums shall be constructed of ultra-violet stabilized, orange, high-density polyethylene (HDPE) or other approved material.
9. Drum body shall have a maximum unballasted weight of 11 lbs.
10. Drum and base shall be marked with manufacturer's name and model number.

RETROREFLECTIVE SHEETING

1. The stripes used on drums shall be constructed of sheeting meeting the color and retroreflectivity requirements of Departmental Materials Specification DMS-8300, "Sign Face Materials." Type A reflective sheeting shall be supplied unless otherwise specified in the plans.
2. The sheeting shall be suitable for use on and shall adhere to the drum surface such that, upon vehicular impact, the sheeting shall remain adhered in-place and exhibit no delaminating, cracking, or loss of retroreflectivity other than that loss due to abrasion of the sheeting surface.

BALLAST

1. Unballasted bases shall be large enough to hold up to 50 lbs. of sand. This base, when filled with the ballast material, should weigh between 35 lbs (minimum) and 50 lbs (maximum). The ballast may be sand in one to three sandbags separate from the base, sand in a sand-filled plastic base, or other ballasting devices as approved by the Engineer. Stacking of sandbags will be allowed, however height of sandbags above pavement surface may not exceed 12 inches.
2. Bases with built-in ballast shall weigh between 40 lbs. and 50 lbs. Built-in ballast can be constructed of an integral crumb rubber base or a solid rubber base.
3. Recycled truck tire sidewalls may be used for ballast on drums approved for this type of ballast on the CWZTCD list.
4. The ballast shall not be heavy objects, water, or any material that would become hazardous to motorists, pedestrians, or workers when the drum is struck by a vehicle.
5. When used in regions susceptible to freezing, drums shall have drainage holes in the bottoms so that water will not collect and freeze becoming a hazard when struck by a vehicle.
6. Ballast shall not be placed on top of drums.
7. Adhesives may be used to secure base of drums to pavement.

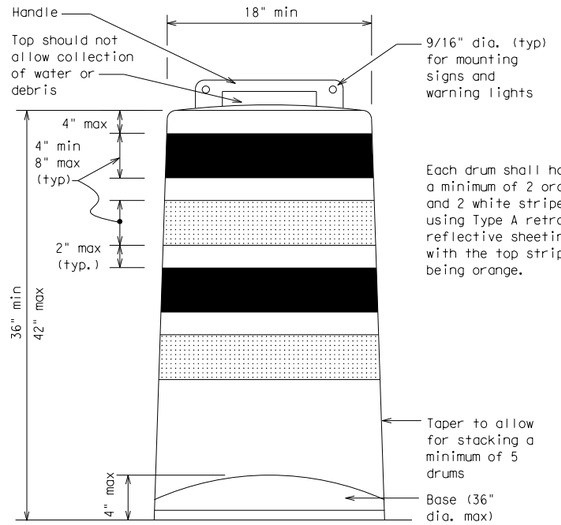

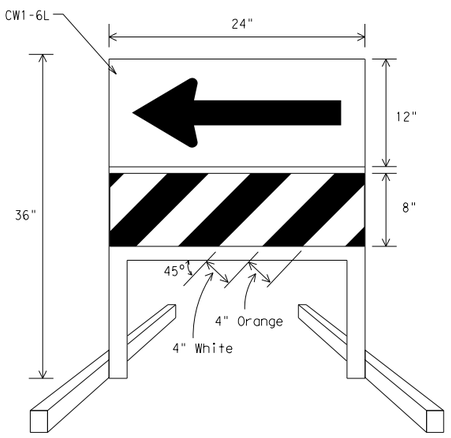

DIRECTION INDICATOR BARRICADE

1. The Direction Indicator Barricade may be used in tapers, transitions, and other areas where specific directional guidance to drivers is necessary.
2. If used, the Direction Indicator Barricade should be used in series to direct the driver through the transition and into the intended travel lane.
3. The Direction Indicator Barricade shall consist of One-Direction Large Arrow (CW1-6) sign in the size shown with a black arrow on a background of Type B_{FL} or Type C_{FL} Orange retroreflective sheeting above a rail with Type A retroreflective sheeting in alternating 4" white and orange stripes sloping downward at an angle of 45 degrees in the direction road users are to pass. Sheeting types shall be as per DMS 8300.
4. Double arrows on the Direction Indicator Barricade will not be allowed.
5. Approved manufacturers are shown on the CWZTCD List. Ballast shall be as approved by the manufacturers instructions.

This detail is not intended for fabrication. See note 3 and the CWZTCD list for providers of approved Detectable Pedestrian Barricades

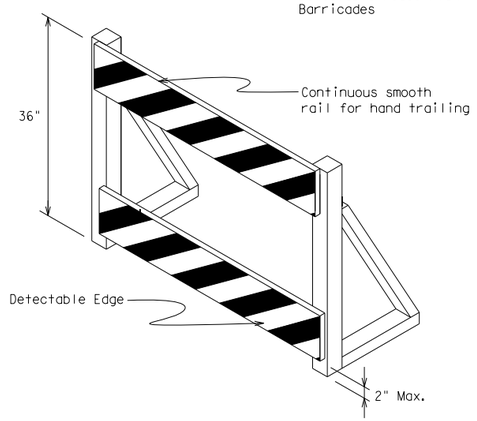

DETECTABLE PEDESTRIAN BARRICADES

1. When existing pedestrian facilities are disrupted, closed, or relocated in a TTC zone, the temporary facilities shall be detectable and include accessibility features consistent with the features present in the existing pedestrian facility.
2. Where pedestrians with visual disabilities normally use the closed sidewalk, a device that is detectable by a person with a visual disability traveling with the aid of a long cane shall be placed across the full width of the closed sidewalk.
3. Detectable pedestrian barricades similar to the one pictured above, longitudinal channelizing devices, some concrete barriers, and wood or chain link fencing with a continuous detectable edging can satisfactorily delineate a pedestrian path.
4. Tape, rope, or plastic chain strung between devices are not detectable, do not comply with the design standards in the "Americans with Disabilities Act Accessibility Guidelines for Buildings and Facilities (ADAAG)" and should not be used as a control for pedestrian movements.
5. Warning lights shall not be attached to detectable pedestrian barricades.
6. Detectable pedestrian barricades may use 8" nominal barricade rails as shown on BC(10) provided that the top rail provides a smooth continuous rail suitable for hand trailing with no splinters, burrs, or sharp edges.

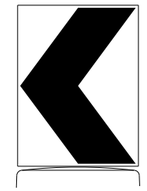

18" x 24" Sign
(Maximum Sign Dimension)
Chevron CW1-8, Opposing Traffic Lane Divider, Driveway sign D70a, Keep Right R4 series or other signs as approved by Engineer

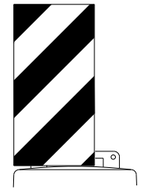

12" x 24"
Vertical Panel
mount with diagonals sloping down towards travel way

Plywood, Aluminum or Metal sign substrates shall NOT be used on plastic drums

SIGNS, CHEVRONS, AND VERTICAL PANELS MOUNTED ON PLASTIC DRUMS

1. Signs used on plastic drums shall be manufactured using substrates listed on the CWZTCD.
2. Chevrons and other work zone signs with an orange background shall be manufactured with Type B_{FL} or Type C_{FL} Orange sheeting meeting the color and retroreflectivity requirements of DMS-8300, "Sign Face Material," unless otherwise specified in the plans.
3. Vertical Panels shall be manufactured with orange and white sheeting meeting the requirements of DMS-8300 Type A Diagonal stripes on Vertical Panels shall slope down toward the intended traveled lane.
4. Other sign messages (text or symbolic) may be used as approved by the Engineer. Sign dimensions shall not exceed 18 inches in width or 24 inches in height, except for the R9 series signs discussed in note 8 below.
5. Signs shall be installed using a 1/2 inch bolt (nominal) and nut, two washers, and one locking washer for each connection.
6. Mounting bolts and nuts shall be fully engaged and adequately torqued. Bolts should not extend more than 1/2 inch beyond nuts.
7. Chevrons may be placed on drums on the outside of curves, on merging tapers or on shifting tapers. When used in these locations they may be placed on every drum or spaced not more than on every third drum. A minimum of three (3) should be used at each location called for in the plans.
8. R9-9, R9-10, R9-11 and R9-11a Sidewalk Closed signs which are 24 inches wide may be mounted on plastic drums, with approval of the Engineer.

Texas Department of Transportation

Traffic Operations Division Standard

BARRICADE AND CONSTRUCTION CHANNELIZING DEVICES

BC(8)-14

FILE: bc-14.dgn	DN: TxDOT	CK: TxDOT	DW: TxDOT	CK: TxDOT
©TxDOT November 2002	CONT	SECT	JOB	HIGHWAY
REVISIONS				KLEIN RD
4-03 7-13	DIST	COUNTY		SHEET NO.
9-07 8-14	SAT	GUADALUPE		100

DATE: 1/9/2020 3:42:19 PM
FILE: H:\projects\5103003\Design\Civil\Standards\TCP\bc-14.dgn

DISCLAIMER:
The use of this standard is governed by the "Texas Engineering Practice Act". No warranty of any kind is made by TxDOT for any purpose whatsoever. TxDOT assumes no responsibility for the conversion of this standard to other formats or for incorrect results or damages resulting from its use.

DATE: 1/9/2020 3:42:20 PM
FILE: H:\projects\510\30\03\design\Civil\Standards\TCP\bc-14.dgn

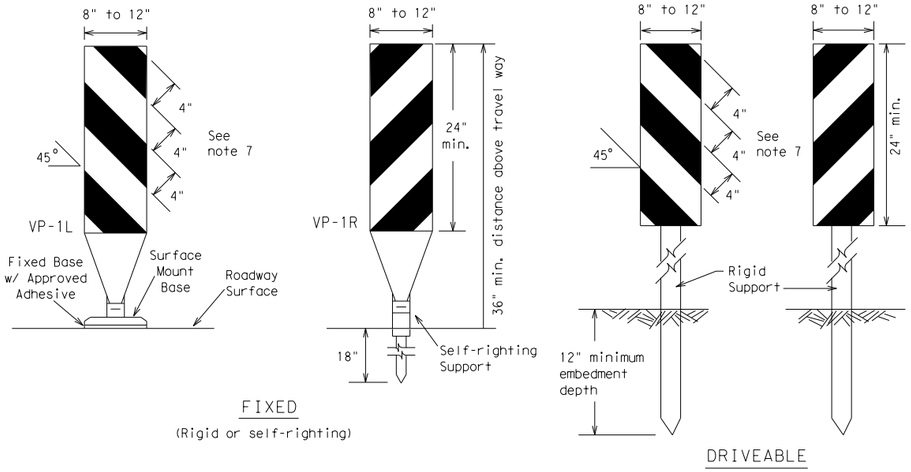

FIXED

(Rigid or self-righting)

DRIVEABLE

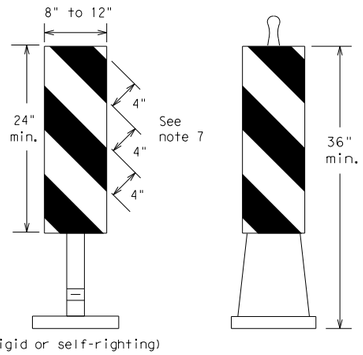

(Rigid or self-righting)

PORTABLE

1. Vertical Panels (VP's) are normally used to channelize traffic or divide opposing lanes of traffic.
2. VP's may be used in daytime or nighttime situations. They may be used at the edge of shoulder drop-offs and other areas such as lane transitions where positive daytime and nighttime delineation is required. The Engineer/Inspector shall refer to the Roadway Design Manual Appendix B "Treatment of Pavement Drop-offs in Work Zones" for additional guidelines on the use of VP's for drop-offs.
3. VP's should be mounted back to back if used at the edge of cuts adjacent to two-way two lane roadways. Stripes are to be reflective orange and reflective white and should always slope downward toward the travel lane.
4. VP's used on expressways and freeways or other high speed roadways, may have more than 270 square inches of retroreflective area facing traffic.
5. Self-righting supports are available with portable base. See "Compliant Work Zone Traffic Control Devices List" (CWZTCD).
6. Sheeting for the VP's shall be retroreflective Type A conforming to Departmental Material Specification DMS-8300, unless noted otherwise.
7. Where the height of reflective material on the vertical panel is 36 inches or greater, a panel stripe of 6 inches shall be used.

VERTICAL PANELS (VPs)

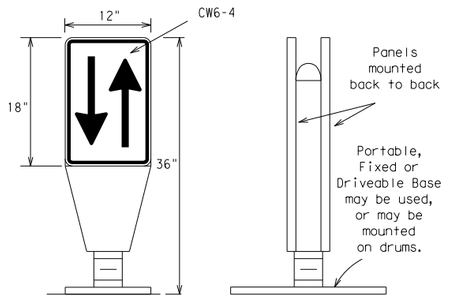

1. Opposing Traffic Lane Dividers (OTLD) are delineation devices designed to convert a normal one-way roadway section to two-way operation. OTLD's are used on temporary centerlines. The upward and downward arrows on the sign's face indicate the direction of traffic on either side of the divider. The base is secured to the pavement with an adhesive or rubber weight to minimize movement caused by a vehicle impact or wind gust.
2. The OTLD may be used in combination with 42" cones or VPs.
3. Spacing between the OTLD shall not exceed 500 feet. 42" cones or VPs placed between the OTLD's should not exceed 100 foot spacing.
4. The OTLD shall be orange with a black non-reflective legend. Sheeting for the OTLD shall be retroreflective Type B_{FL} or Type C_{FL} conforming to Departmental Material Specification DMS-8300, unless noted otherwise. The legend shall meet the requirements of DMS-8300.

OPPOSING TRAFFIC LANE DIVIDERS (OTLD)

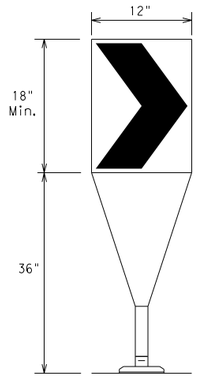

Fixed Base w/ Approved Adhesive (Driveable Base, or Flexible Support can be used)

1. The chevron shall be a vertical rectangle with a minimum size of 12 by 18 inches.
2. Chevrons are intended to give notice of a sharp change of alignment with the direction of travel and provide additional emphasis and guidance for vehicle operators with regard to changes in horizontal alignment of the roadway.
3. Chevrons, when used, shall be erected on the outside of a sharp curve or turn, or on the far side of an intersection. They shall be in line with and at right angles to approaching traffic. Spacing should be such that the motorist always has three in view, until the change in alignment eliminates its need.
4. To be effective, the chevron should be visible for at least 500 feet.
5. Chevrons shall be orange with a black nonreflective legend. Sheeting for the chevron shall be retroreflective Type B_{FL} or Type C_{FL} conforming to Departmental Material Specification DMS-8300, unless noted otherwise. The legend shall meet the requirements of DMS-8300.
6. For Long Term Stationary use on tapers or transitions on freeways and divided highways self-righting chevrons may be used to supplement plastic drums but not to replace plastic drums.

CHEVRONS

GENERAL NOTES

1. Work Zone channelizing devices illustrated on this sheet may be installed in close proximity to traffic and are suitable for use on high or low speed roadways. The Engineer/Inspector shall ensure that spacing and placement is uniform and in accordance with the "Texas Manual on Uniform Traffic Control Devices" (TMUTCD).
2. Channelizing devices shown on this sheet may have a driveable, fixed or portable base. The requirement for self-righting channelizing devices must be specified in the General Notes or other plan sheets.
3. Channelizing devices on self-righting supports should be used in work zone areas where channelizing devices are frequently impacted by errant vehicles or vehicle related wind gusts making alignment of the channelizing devices difficult to maintain. Locations of these devices shall be detailed elsewhere in the plans. These devices shall conform to the TMUTCD and the "Compliant Work Zone Traffic Control Devices List" (CWZTCD).
4. The Contractor shall maintain devices in a clean condition and replace damaged, nonreflective, faded, or broken devices and bases as required by the Engineer/Inspector. The Contractor shall be required to maintain proper device spacing and alignment.
5. Portable bases shall be fabricated from virgin and/or recycled rubber. The portable bases shall weigh a minimum of 30 lbs.
6. Pavement surfaces shall be prepared in a manner that ensures proper bonding between the adhesives, the fixed mount bases and the pavement surface. Adhesives shall be prepared and applied according to the manufacturer's recommendations.
7. The installation and removal of channelizing devices shall not cause detrimental effects to the final pavement surfaces, including pavement surface discoloration or surface integrity. Driveable bases shall not be permitted on final pavement surfaces. The Engineer/Inspector shall approve all application and removal procedures of fixed bases.

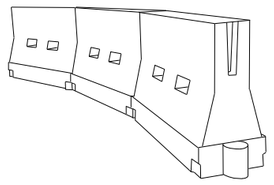

LONGITUDINAL CHANNELIZING DEVICES (LCD)

1. LCDs are crashworthy, lightweight, deformable devices that are highly visible, have good target value and can be connected together. They are not designed to contain or redirect a vehicle on impact.
2. LCDs may be used instead of a line of cones or drums.
3. LCDs shall be placed in accordance to application and installation requirements specific to the device, and used only when shown on the CWZTCD list.
4. LCDs should not be used to provide positive protection for obstacles, pedestrians or workers.
5. LCDs shall be supplemented with retroreflective delineation as required for temporary barriers on BC(7) when placed roughly parallel to the travel lanes.
6. LCDs used as barricades placed perpendicular to traffic should have at least one row of reflective sheeting meeting the requirements for barricade rails as shown on BC(10) placed near the top of the LCD along the full length of the device.

WATER BALLASTED SYSTEMS USED AS BARRIERS

1. Water ballasted systems used as barriers shall not be used solely to channelize road users, but also to protect the work space per the appropriate NCHRP 350 crashworthiness requirements based on roadway speed and barrier application.
2. Water ballasted systems used to channelize vehicular traffic shall be supplemented with retroreflective delineation or channelizing devices to improve daytime/nighttime visibility. They may also be supplemented with pavement markings.
3. Water ballasted systems used as barriers shall be placed in accordance to application and installation requirements specific to the device, and used only when shown on the CWZTCD list.
4. Water ballasted systems used as barriers should not be used for a merging taper except in low speed (less than 45 MPH) urban areas. When used on a taper in a low speed urban area, the taper shall be delineated and the taper length should be designed to optimize road user operations considering the available geometric conditions.
5. When water ballasted systems used as barriers have blunt ends exposed to traffic, they should be attenuated as per manufacturer recommendations or flared to a point outside the clear zone.

If used to channelize pedestrians, longitudinal channelizing devices or water ballasted systems must have a continuous detectable bottom for users of long canes and the top of the unit shall not be less than 32 inches in height.

HOLLOW OR WATER BALLASTED SYSTEMS USED AS LONGITUDINAL CHANNELIZING DEVICES OR BARRIERS

Posted Speed *	Formula	Minimum Desirable Taper Lengths * * 10' Offset	11' Offset	12' Offset	Suggested Maximum Spacing of Channelizing Devices On a Taper	On a Tangent
30	$L = \frac{WS^2}{60}$	150'	165'	180'	30'	60'
35		205'	225'	245'	35'	70'
40		265'	295'	320'	40'	80'
45	L = WS	450'	495'	540'	45'	90'
50		500'	550'	600'	50'	100'
55		550'	605'	660'	55'	110'
60		600'	660'	720'	60'	120'
65		650'	715'	780'	65'	130'
70		700'	770'	840'	70'	140'
75		750'	825'	900'	75'	150'
80		800'	880'	960'	80'	160'

* * Taper lengths have been rounded off.
L=Length of Taper (FT.) W=Width of Offset (FT.)
S=Posted Speed (MPH)

SUGGESTED MAXIMUM SPACING OF CHANNELIZING DEVICES AND MINIMUM DESIRABLE TAPER LENGTHS

Texas Department of Transportation

Traffic Operations Division Standard

BARRICADE AND CONSTRUCTION CHANNELIZING DEVICES

BC(9)-14

FILE: bc-14.dgn	DN: TxDOT	CK: TxDOT	DW: TxDOT	CK: TxDOT
© TxDOT November 2002	CONT	SECT	JOB	HIGHWAY
REVISIONS 9-07 8-14 7-13				KLEIN RD
	DIST	COUNTY		SHEET NO.
	SAT	GUADALUPE		101

DISCLAIMER:
The use of this standard is governed by the "Texas Engineering Practice Act". No warranty of any kind is made by TxDOT for any purpose whatsoever. TxDOT assumes no responsibility for the conversion of this standard to other formats or for incorrect results or damages resulting from its use.

TYPE 3 BARRICADES

1. Refer to the Compliant Work Zone Traffic Control Devices List (CWZTCD) for details of the Type 3 Barricades and a list of all materials used in the construction of Type 3 Barricades.
2. Type 3 Barricades shall be used at each end of construction projects closed to all traffic.
3. Barricades extending across a roadway should have stripes that slope downward in the direction toward which traffic must turn in detouring. When both right and left turns are provided, the chevron striping may slope downward in both directions from the center of the barricade. Where no turns are provided at a closed road striping should slope downward in both directions toward the center of roadway.
4. Striping of rails, for the right side of the roadway, should slope downward to the left. For the left side of the roadway, striping should slope downward to the right.
5. Identification markings may be shown only on the back of the barricade rails. The maximum height of letters and/or company logos used for identification shall be 1".
6. Barricades shall not be placed parallel to traffic unless an adequate clear zone is provided.
7. Warning lights shall NOT be installed on barricades.
8. Where barricades require the use of weights to keep from turning over, the use of sandbags with dry, cohesionless sand is recommended. The sandbags will be tied shut to keep the sand from spilling and to maintain a constant weight. Sand bags shall not be stacked in a manner that covers any portion of a barricade rails reflective sheeting. Rock, concrete, iron, steel or other solid objects will NOT be permitted. Sandbags should weigh a minimum of 35 lbs and a maximum of 50 lbs. Sandbags shall be made of a durable material that tears upon vehicular impact. Rubber (such as tire inner tubes) shall not be used for sandbags. Sandbags shall only be placed along or upon the base supports of the device and shall not be suspended above ground level or hung with rope, wire, chains or other fasteners.
9. Sheeting for barricades shall be retroreflective Type A conforming to Departmental Material Specification DMS-8300 unless otherwise noted.

Barricades shall NOT be used as a sign support.

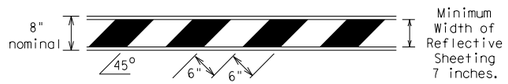

TYPICAL STRIPING DETAIL FOR BARRICADE RAIL

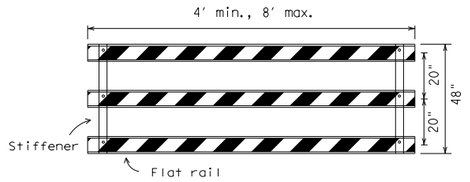

Stiffener may be inside or outside of support, but no more than 2 stiffeners shall be allowed on one barricade.

TYPICAL PANEL DETAIL
FOR SKID OR POST TYPE BARRICADES

Each roadway of a divided highway shall be barricaded in the same manner.

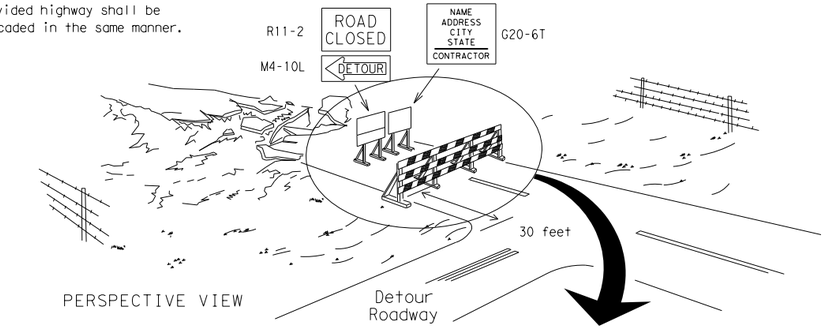

PERSPECTIVE VIEW

The three rails on Type 3 barricades shall be reflectorized orange and reflective white stripes on one side facing one-way traffic and both sides for two-way traffic.

Barricade striping should slant downward in the direction of detour.

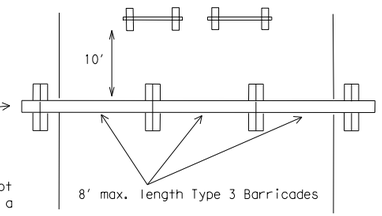

PLAN VIEW

1. Signs should be mounted on independent supports at a 7 foot mounting height in center of roadway. The signs should be a minimum of 10 feet behind Type 3 Barricades.
2. Advance signing shall be as specified elsewhere in the plans.

TYPE 3 BARRICADE (POST AND SKID) TYPICAL APPLICATION

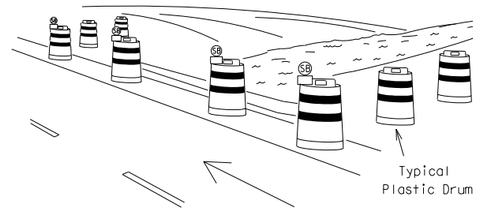

PERSPECTIVE VIEW

1. Where positive redirectional capability is provided, drums may be omitted.
2. Plastic construction fencing may be used with drums for safety as required in the plans.
3. Vertical Panels on flexible support may be substituted for drums when the shoulder width is less than 4 feet.
4. When the shoulder width is greater than 12 feet, steady-burn lights may be omitted if drums are used.
5. Drums must extend the length of the culvert widening.

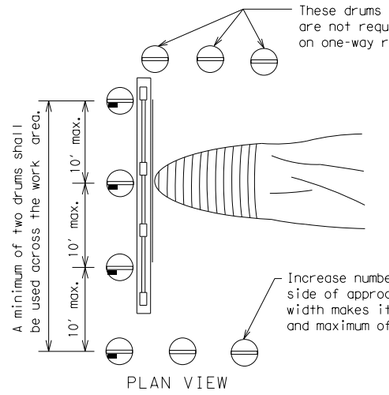

LEGEND	
	Plastic drum
	Plastic drum with steady burn light or yellow warning reflector
SB	Steady burn warning light or yellow warning reflector

PLAN VIEW

CULVERT WIDENING OR OTHER ISOLATED WORK WITHIN THE PROJECT LIMITS

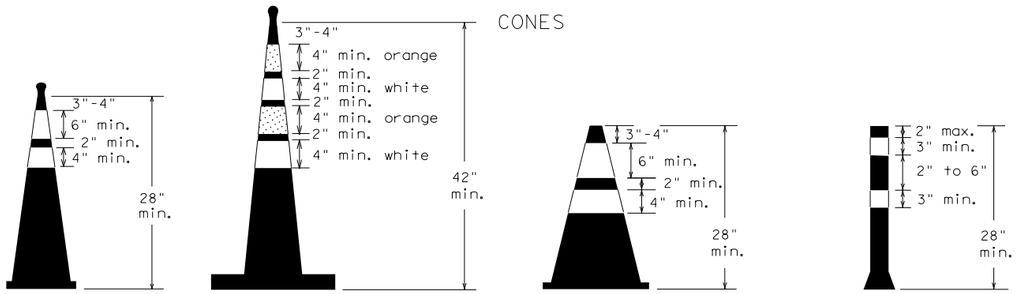

Two-Piece cones

One-Piece cones

Tubular Marker

28" Cones shall have a minimum weight of 9 1/2 lbs.

42" 2-piece cones shall have a minimum weight of 30 lbs. including base.

1. Traffic cones and tubular markers shall be predominantly orange, and meet the height and weight requirements shown above.
2. One-piece cones have the body and base of the cone molded in one consolidated unit. Two-piece cones have a cone shaped body and a separate rubber base, or ballast, that is added to keep the device upright and in place.
3. Two-piece cones may have a handle or loop extending up to 8" above the minimum height shown, in order to aid in retrieving the device.
4. Cones or tubular markers used at night shall have white or white and orange reflective bands as shown above. The reflective bands shall have a smooth, sealed outer surface and meet the requirements of Departmental Material Specification DMS-8300 Type A.
5. 28" cones and tubular markers are generally suitable for short duration and short-term stationary work as defined on BC(4). These should not be used for intermediate-term or long-term stationary work unless personnel is on-site to maintain them in their proper upright position.
6. 42" two-piece cones, vertical panels or drums are suitable for all work zone durations.
7. Cones or tubular markers used on each project should be of the same size and shape.

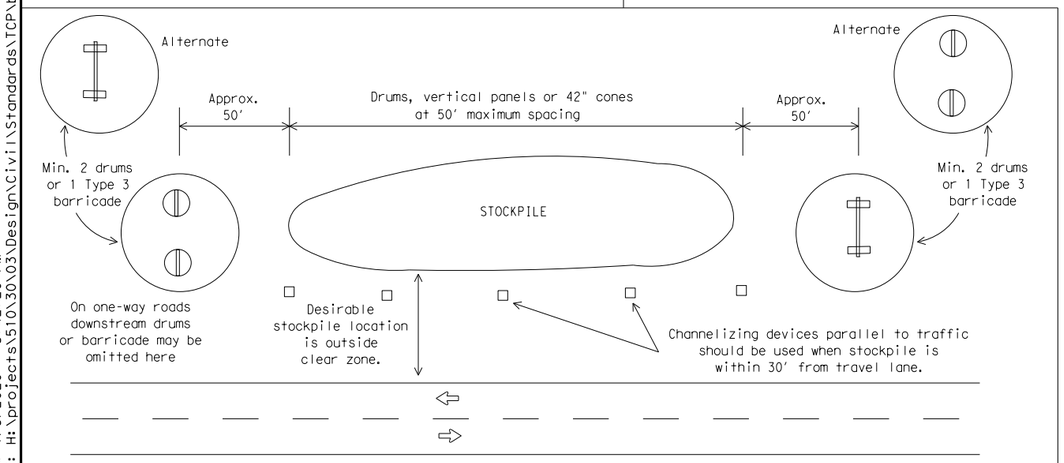

TRAFFIC CONTROL FOR MATERIAL STOCKPILES

THIS DEVICE SHALL NOT BE USED ON PROJECTS LET AFTER MARCH 2014.

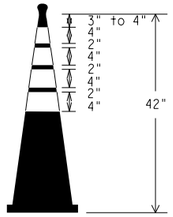

EDGELINE CHANNELIZER

1. This device is intended only for use in place of a vertical panel to channelize traffic by indicating the edge of the travel lane. It is not intended to be used in transitions or tapers.
2. This device shall not be used to separate lanes of traffic (opposing or otherwise) or warn of objects.
3. This device is based on a 42 inch, two-piece cone with an alternate striping pattern: four 4 inch retroreflective bands, with an approximate 2 inch gap between bands. The color of the band should correspond to the color of the edgeline (yellow for left edgeline, white for right edgeline) for which the device is substituted or for which it supplements. The reflectorized bands shall be retroreflective Type A conforming to Departmental Material Specification DMS-8300, unless otherwise noted.
4. The base must weigh a minimum of 30 lbs.

Texas Department of Transportation

Traffic Operations Division Standard

BARRICADE AND CONSTRUCTION CHANNELIZING DEVICES

BC(10)-14

FILE: bc-14.dgn	DN: TxDOT	CK: TxDOT	DW: TxDOT	CK: TxDOT
©TxDOT November 2002	CONT	SECT	JOB	HIGHWAY
REVISIONS				KLEIN RD
9-07 8-14	DIST	COUNTY		SHEET NO.
7-13	SAT	GUADALUPE		102

DATE: 1/9/2020 3:42:20 PM
FILE: H:\projects\510\30\03\Design\Civil\Standards\TCP\bc-14.dgn

DISCLAIMER:
The use of this standard is governed by the "Texas Engineering Practice Act". No warranty of any kind is made by TxDOT for any purpose whatsoever. TxDOT assumes no responsibility for the conversion of this standard to other formats or for incorrect results or damages resulting from its use.

WORK ZONE PAVEMENT MARKINGS

GENERAL

1. The Contractor shall be responsible for maintaining work zone and existing pavement markings, in accordance with the standard specifications and special provisions, on all roadways open to traffic within the CSJ limits unless otherwise stated in the plans.
2. Color, patterns and dimensions shall be in conformance with the "Texas Manual on Uniform Traffic Control Devices" (TMUTCD).
3. Additional supplemental pavement marking details may be found in the plans or specifications.
4. Pavement markings shall be installed in accordance with the TMUTCD and as shown on the plans.
5. When short term markings are required on the plans, short term markings shall conform with the TMUTCD, the plans and details as shown on the Standard Plan Sheet WZ(STPM).
6. When standard pavement markings are not in place and the roadway is opened to traffic, DO NOT PASS signs shall be erected to mark the beginning of the sections where passing is prohibited and PASS WITH CARE signs at the beginning of sections where passing is permitted.
7. All work zone pavement markings shall be installed in accordance with Item 662, "Work Zone Pavement Markings."

RAISED PAVEMENT MARKERS

1. Raised pavement markers are to be placed according to the patterns on BC(12).
2. All raised pavement markers used for work zone markings shall meet the requirements of Item 672, "RAISED PAVEMENT MARKERS" and Departmental Material Specification DMS-4200 or DMS-4300.

PREFABRICATED PAVEMENT MARKINGS

1. Removable prefabricated pavement markings shall meet the requirements of DMS-8241.
2. Non-removable prefabricated pavement markings (foil back) shall meet the requirements of DMS-8240.

MAINTAINING WORK ZONE PAVEMENT MARKINGS

1. The Contractor will be responsible for maintaining work zone pavement markings within the work limits.
2. Work zone pavement markings shall be inspected in accordance with the frequency and reporting requirements of work zone traffic control device inspections as required by Form 599.
3. The markings should provide a visible reference for a minimum distance of 300 feet during normal daylight hours and 160 feet when illuminated by automobile low-beam headlights at night, unless sight distance is restricted by roadway geometrics.
4. Markings failing to meet this criteria within the first 30 days after placement shall be replaced at the expense of the Contractor as per Specification Item 662.

REMOVAL OF PAVEMENT MARKINGS

1. Pavement markings that are no longer applicable, could create confusion or direct a motorist toward or into the closed portion of the roadway shall be removed or obliterated before the roadway is opened to traffic.
2. The above shall not apply to detours in place for less than three days, where flaggers and/or sufficient channelizing devices are used in lieu of markings to outline the detour route.
3. Pavement markings shall be removed to the fullest extent possible, so as not to leave a discernable marking. This shall be by any method approved by TxDOT Specification Item 677 for "Eliminating Existing Pavement Markings and Markers".
4. The removal of pavement markings may require resurfacing or seal coating portions of the roadway as described in Item 677.
5. Subject to the approval of the Engineer, any method that proves to be successful on a particular type pavement may be used.
6. Blast cleaning may be used but will not be required unless specifically shown in the plans.
7. Over-painting of the markings SHALL NOT BE permitted.
8. Removal of raised pavement markers shall be as directed by the Engineer.
9. Removal of existing pavement markings and markers will be paid for directly in accordance with Item 677, "ELIMINATING EXISTING PAVEMENT MARKINGS AND MARKERS," unless otherwise stated in the plans.
10. Black-out marking tape may be used to cover conflicting existing markings for periods less than two weeks when approved by the Engineer.

Temporary Flexible-Reflective Roadway Marker Tabs

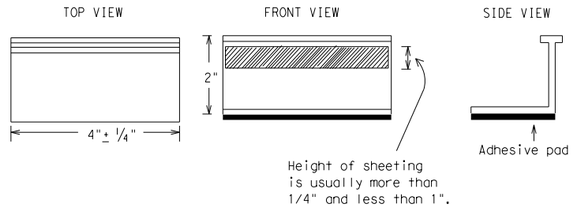

STAPLES OR NAILS SHALL NOT BE USED TO SECURE TEMPORARY FLEXIBLE-REFLECTIVE ROADWAY MARKER TABS TO THE PAVEMENT SURFACE

1. Temporary flexible-reflective roadway marker tabs used as guidemarks shall meet the requirements of DMS-8242.
2. Tabs detailed on this sheet are to be inspected and accepted by the Engineer or designated representative. Sampling and testing is not normally required, however at the option of the Engineer, either "A" or "B" below may be imposed to assure quality before placement on the roadway.
   A. Select five (5) or more tabs at random from each lot or shipment and submit to the Construction Division, Materials and Pavement Section to determine specification compliance.
   B. Select five (5) tabs and perform the following test. Affix five (5) tabs at 24 inch intervals on an asphaltic pavement in a straight line. Using a medium size passenger vehicle or pickup, run over the markers with the front and rear tires at a speed of 35 to 40 miles per hour, four (4) times in each direction. No more than one (1) out of the five (5) reflective surfaces shall be lost or displaced as a result of this test.
3. Small design variances may be noted between tab manufacturers.
4. See Standard Sheet WZ(STPM) for tab placement on new pavements. See Standard Sheet TCP(7-1) for tab placement on seal coat work.

RAISED PAVEMENT MARKERS USED AS GUIDEMARKS

1. Raised pavement markers used as guidemarks shall be from the approved product list, and meet the requirements of DMS-4200.
2. All temporary construction raised pavement markers provided on a project shall be of the same manufacturer.
3. Adhesive for guidemarks shall be bituminous material hot applied or butyl rubber pad for all surfaces, or thermoplastic for concrete surfaces.

Guidemarks shall be designated as:
YELLOW - (two amber reflective surfaces with yellow body).
WHITE - (one silver reflective surface with white body).

DEPARTMENTAL MATERIAL SPECIFICATIONS	
PAVEMENT MARKERS (REFLECTORIZED)	DMS-4200
TRAFFIC BUTTONS	DMS-4300
EPOXY AND ADHESIVES	DMS-6100
BITUMINOUS ADHESIVE FOR PAVEMENT MARKERS	DMS-6130
PERMANENT PREFABRICATED PAVEMENT MARKINGS	DMS-8240
TEMPORARY REMOVABLE, PREFABRICATED PAVEMENT MARKINGS	DMS-8241
TEMPORARY FLEXIBLE, REFLECTIVE ROADWAY MARKER TABS	DMS-8242

A list of prequalified reflective raised pavement markers, non-reflective traffic buttons, roadway marker tabs and other pavement markings can be found at the Material Producer List web address shown on BC(1).

Texas Department of Transportation

Traffic Operations Division Standard

BARRICADE AND CONSTRUCTION PAVEMENT MARKINGS

BC(11)-14

FILE: bc-14.dgn	DN: TxDOT	CK: TxDOT	DW: TxDOT	CK: TxDOT
©TxDOT February 1998	CONT	SECT	JOB	HIGHWAY
REVISIONS				KLEIN RD
2-98 9-07	DIST	COUNTY		SHEET NO.
1-02 7-13	SAT	GUADALUPE		103
11-02 8-14				

105

DATE: 1/9/2020 3:42:21 PM
FILE: H:\projects\510\30\03\Design\Civil\Standards\TCP\bc-14.dgn

DISCLAIMER:
The use of this standard is governed by the "Texas Engineering Practice Act". No warranty of any kind is made by TxDOT for any purpose whatsoever. TxDOT assumes no responsibility for the conversion of this standard to other formats or for incorrect results or damages resulting from its use.

DATE: 1/9/2020 3:42:21 PM
FILE: H:\projects\510\30\03\Design\Civil\Standards\TCP\bc-14.dgn

PAVEMENT MARKING PATTERNS

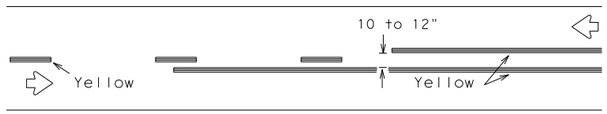

REFLECTORIZED PAVEMENT MARKINGS - PATTERN A

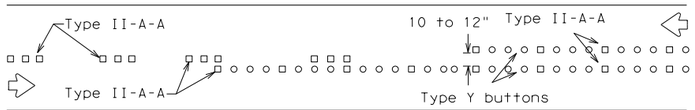

RAISED PAVEMENT MARKERS - PATTERN A

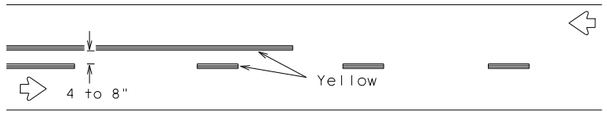

REFLECTORIZED PAVEMENT MARKINGS - PATTERN B

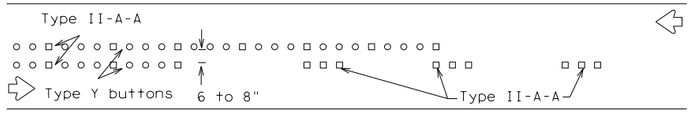

RAISED PAVEMENT MARKERS - PATTERN B

Pattern A is the TXDOT Standard, however Pattern B may be used if approved by the Engineer.
Prefabricated markings may be substituted for reflectorized pavement markings.

CENTER LINE & NO-PASSING ZONE BARRIER LINES FOR TWO-LANE, TWO-WAY HIGHWAYS

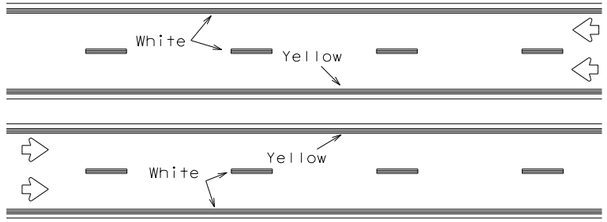

REFLECTORIZED PAVEMENT MARKINGS

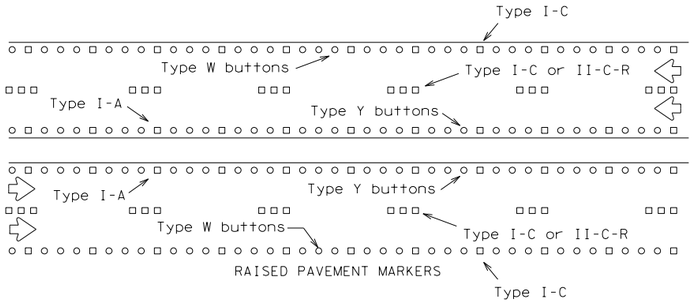

RAISED PAVEMENT MARKERS

Prefabricated markings may be substituted for reflectorized pavement markings.

EDGE & LANE LINES FOR DIVIDED HIGHWAY

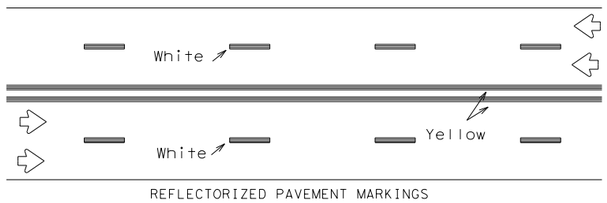

REFLECTORIZED PAVEMENT MARKINGS

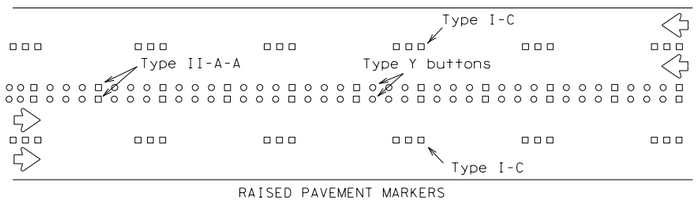

RAISED PAVEMENT MARKERS

Prefabricated markings may be substituted for reflectorized pavement markings.

LANE & CENTER LINES FOR MULTILANE UNDIVIDED HIGHWAYS

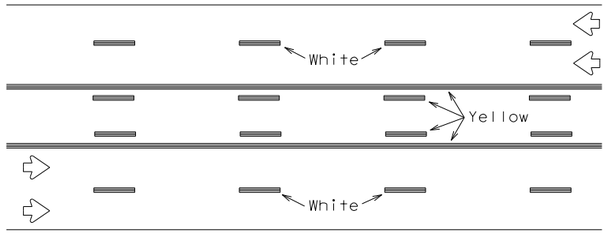

REFLECTORIZED PAVEMENT MARKINGS

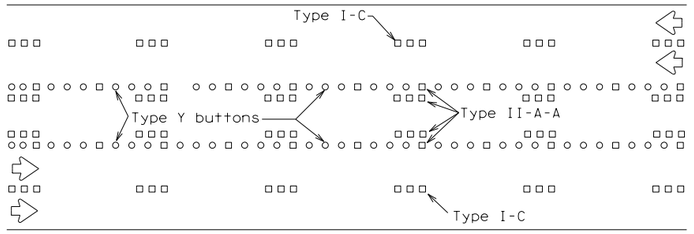

RAISED PAVEMENT MARKERS

Prefabricated markings may be substituted for reflectorized pavement markings.

TWO-WAY LEFT TURN LANE

STANDARD WORK ZONE PAVEMENT MARKINGS DETAILS

SOLID LINES

DOUBLE NO-PASSING LINE

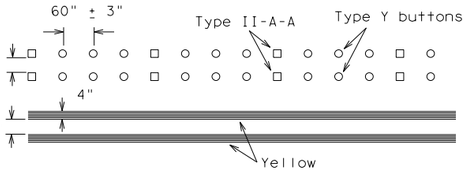

EDGE LINE OR SINGLE NO-PASSING LINE

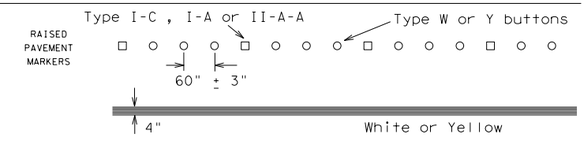

WIDE LINE

(FOR LEFT TURN CHANNELIZING LINE OR CHANNELIZING LINE USED TO DISCOURAGE LANE CHANGING.)

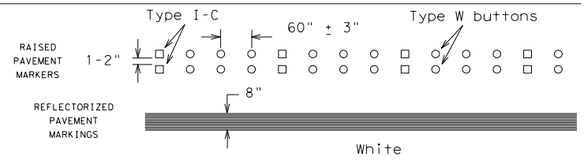

BROKEN LINES

CENTER LINE OR LANE LINE

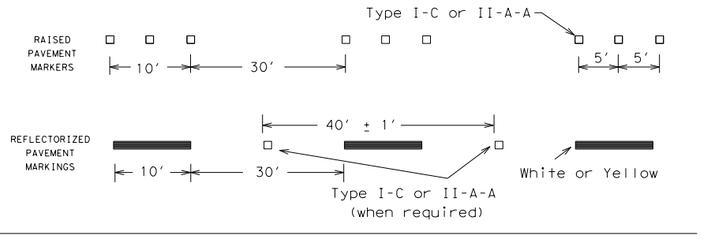

AUXILIARY OR LANEDROP LINE

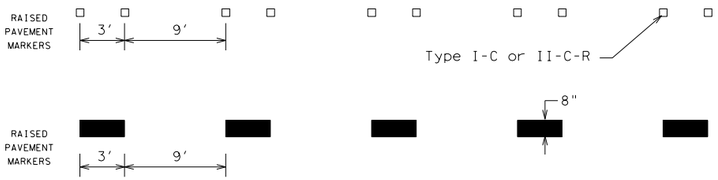

REMOVABLE MARKINGS WITH RAISED PAVEMENT MARKERS

If raised pavement markers are used to supplement REMOVABLE markings, the markers shall be applied to the top of the tape at the approximate mid length of tape used for broken lines or at 20 foot spacing for solid lines. This allows an easier removal of raised pavement markers and tape.

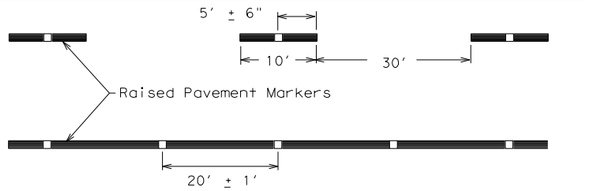

Centerline only - not to be used on edge lines

Raised pavement markers used as standard pavement markings shall be from the approved products list and meet the requirements of Item 672 "RAISED PAVEMENT MARKERS."

Texas Department of Transportation

Traffic Operations Division Standard

BARRICADE AND CONSTRUCTION PAVEMENT MARKING PATTERNS

BC(12)-14

FILE: bc-14.dgn	DN: TxDOT	CK: TxDOT	DW: TxDOT	CK: TxDOT
© TxDOT February 1998	CONT	SECT	JOB	HIGHWAY
REVISIONS				KLEIN RD
1-97 9-07				
2-98 7-13	DIST	COUNTY		SHEET NO.
11-02 8-14	SAT	GUADALUPE		104

DISCLAIMER:
The use of this standard is governed by the "Texas Engineering Practice Act". No warranty of any kind is made by TxDOT for any purpose whatsoever. TxDOT assumes no responsibility for the conversion of this standard to other formats or for incorrect results or damages resulting from its use.

DATE: 1/9/2020 3:42:23 PM
FILE: H:\Projects\510\30\03\Design\Civil\Standards\TCP\tcp2-3-18.dgn

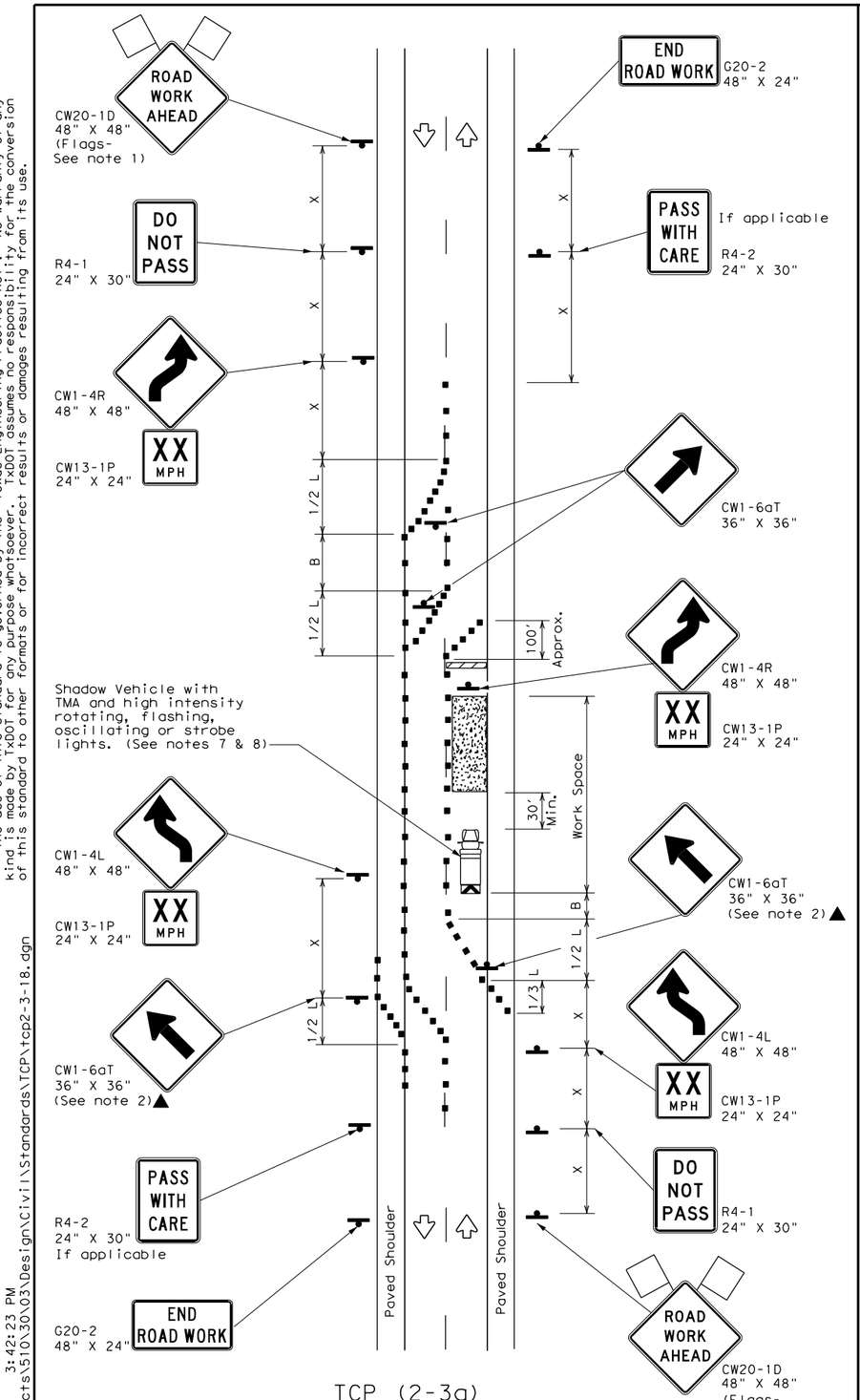

TCP (2-3a)
2-LANE ROADWAY WITH PAVED SHOULDERS

ONE LANE CLOSED
ADEQUATE FIELD OF VIEW

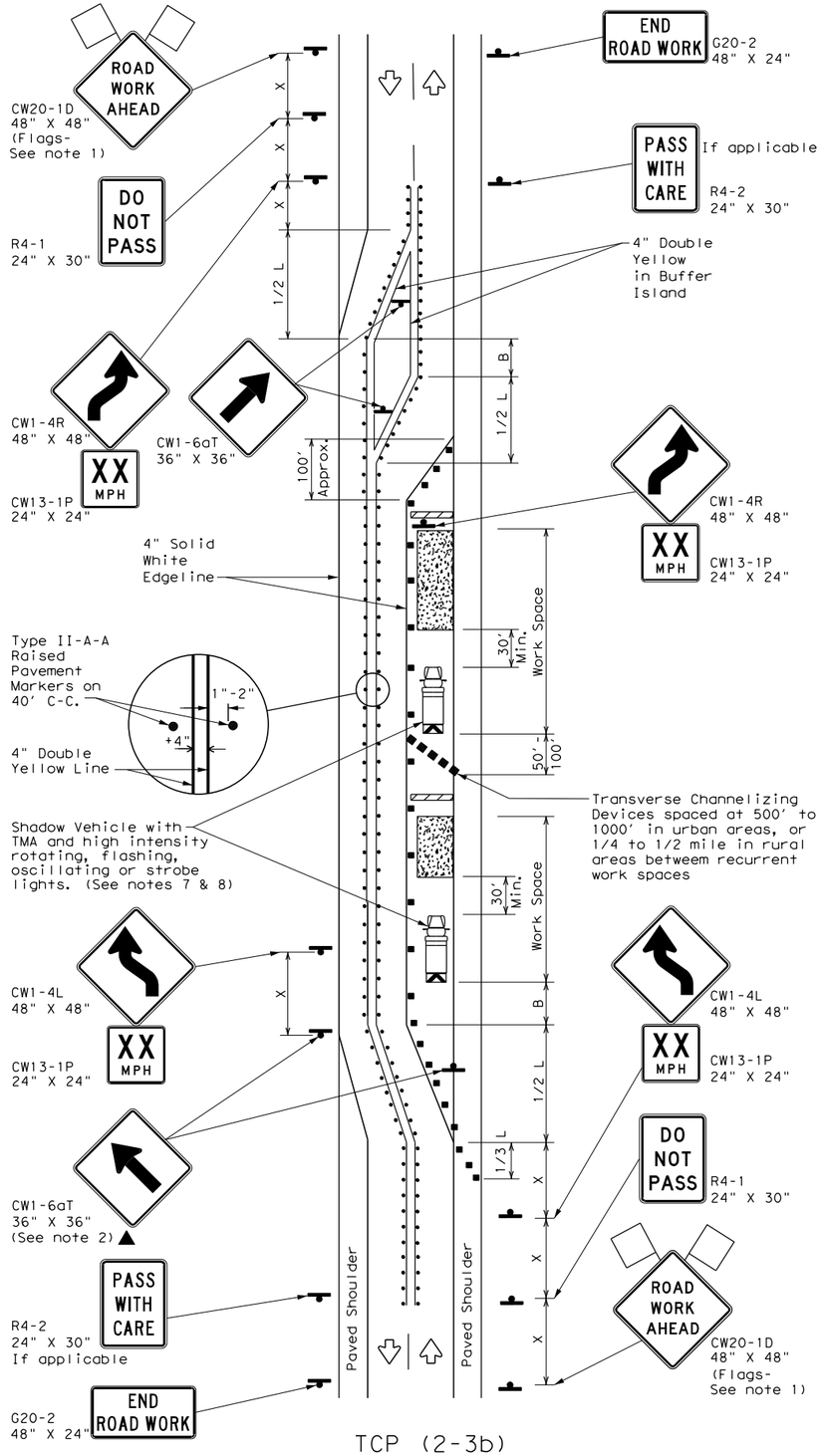

TCP (2-3b)
2-LANE ROADWAY WITH PAVED SHOULDERS

ONE LANE CLOSED
INADEQUATE FIELD OF VIEW

LEGEND			
	Type 3 Barricade		Channelizing Devices
	Heavy Work Vehicle		Truck Mounted Attenuator (TMA)
	Trailer Mounted Flashing Arrow Board		Raised Pavement Markers Ty II-AA
	Sign		Traffic Flow
	Flag		Flagger

Posted Speed *	Formula	Minimum Desirable Taper Lengths ** 10' Offset	11' Offset	12' Offset	Suggested Maximum Spacing of Channelizing Devices On a Taper	On a Tangent	Minimum Sign Spacing "X" Distance	Suggested Longitudinal Buffer Space "B"
30	$L=\frac{WS^2}{60}$	150'	165'	180'	30'	60'	120'	90'
35		205'	225'	245'	35'	70'	160'	120'
40		265'	295'	320'	40'	80'	240'	155'
45	L=WS	450'	495'	540'	45'	90'	320'	195'
50		500'	550'	600'	50'	100'	400'	240'
55		550'	605'	660'	55'	110'	500'	295'
60		600'	660'	720'	60'	120'	600'	350'
65		650'	715'	780'	65'	130'	700'	410'
70		700'	770'	840'	70'	140'	800'	475'
75		750'	825'	900'	75'	150'	900'	540'

* Conventional Roads Only

** Taper lengths have been rounded off.
L=Length of Taper(FT) W=Width of Offset(FT) S=Posted Speed(MPH)

TYPICAL USAGE				
MOBILE	SHORT DURATION	SHORT TERM STATIONARY	INTERMEDIATE TERM STATIONARY	LONG TERM STATIONARY
				TCP(2-3b)ONLY
			✓	✓

GENERAL NOTES

1. Flags attached to signs where shown, are REQUIRED.
2. All traffic control devices illustrated are REQUIRED, except those denoted with the triangle symbol may be omitted when stated elsewhere in the plans, or for routine maintenance work, when approved by the Engineer.
3. When work space will be in place less than three days existing pavement markings may remain in place. Channelizing devices shall be used to separate traffic.
4. Flagger control should NOT be used unless roadway conditions or heavy traffic volume require additional emphasis to safely control traffic. Flagger should be positioned at end of traffic queue.
5. The R4-1 "DO NOT PASS," R4-2 " PASS WITH CARE" and construction regulatory speed zone signs may be installed within CW20-1D "ROAD WORK AHEAD" signs. Proper spacing of signs shall be maintained.
6. Conflicting pavement marking shall be removed for long term projects.
7. A Shadow Vehicle with a TMA should be used anytime it can be positioned 30 to 100 feet in advance of the area of crew exposure without adversely affecting the performance or quality of the work. If workers are no longer present but road or work conditions require the traffic control to remain in place, Type 3 Barricades or other channelizing devices may be substituted.
8. Additional Shadow Vehicles with TMAs may be positioned off the paved surface, next to those shown in order to protect a wider work space.

TCP (2-3a)

9. Conflicting pavement markings shall be removed for long-term projects. For shorter durations where traffic is directed over a yellow centerline, channelizing devices which separate two-way traffic should be spaced on tapers at 20' or 15' if posted speeds are 35 mph or slower, and for tangent sections, at 1/2(S) where S is the speed in mph. This tighter device spacing is intended for the area of the conflicting markings, not the entire work zone.

Texas Department of Transportation

Traffic Operations Division Standard

TRAFFIC CONTROL PLAN TRAFFIC SHIFTS ON TWO-LANE ROADS

TCP(2-3)-18

FILE: tcp(2-3)-18.dgn	DN:	CK:	DW:	CK:
©TxDOT December 1985	CONT	SECT	JOB	HIGHWAY
REVISIONS				KLEIN RD
8-95 3-03	DIST	COUNTY		SHEET NO.
1-97 2-12	SAT	GUADALUPE		105
4-98 2-18				

DISCLAIMER:
The use of this standard is governed by the "Texas Engineering Practice Act". No warranty of any kind is made by TxDOT for any purpose whatsoever. TxDOT assumes no responsibility for the conversion of this standard to other formats or for incorrect results or damages resulting from its use.

DATE: 1/9/2020 3:42:25 PM
FILE: H:\Projects\510\30\03\Design\Civil\Standards\TCP\tcp2-4-18.dgn

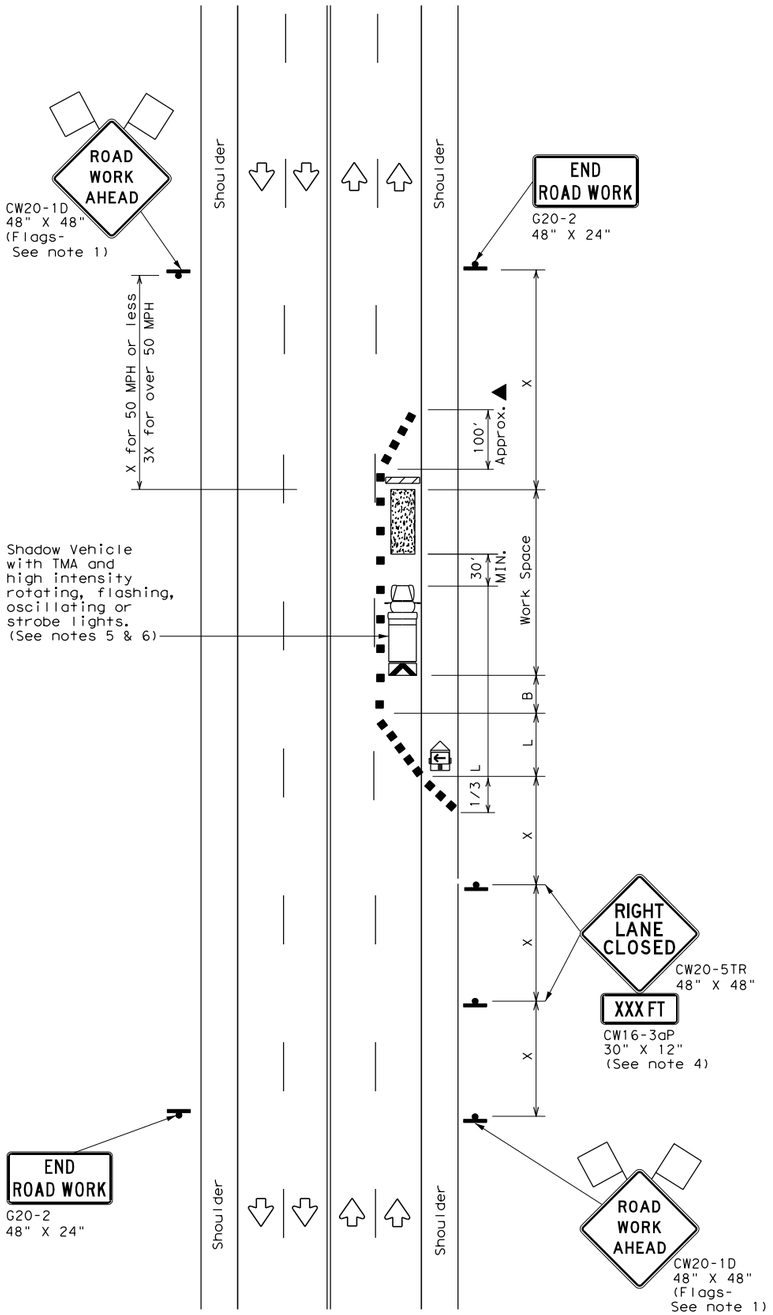

TCP (2-4a)

ONE LANE CLOSED

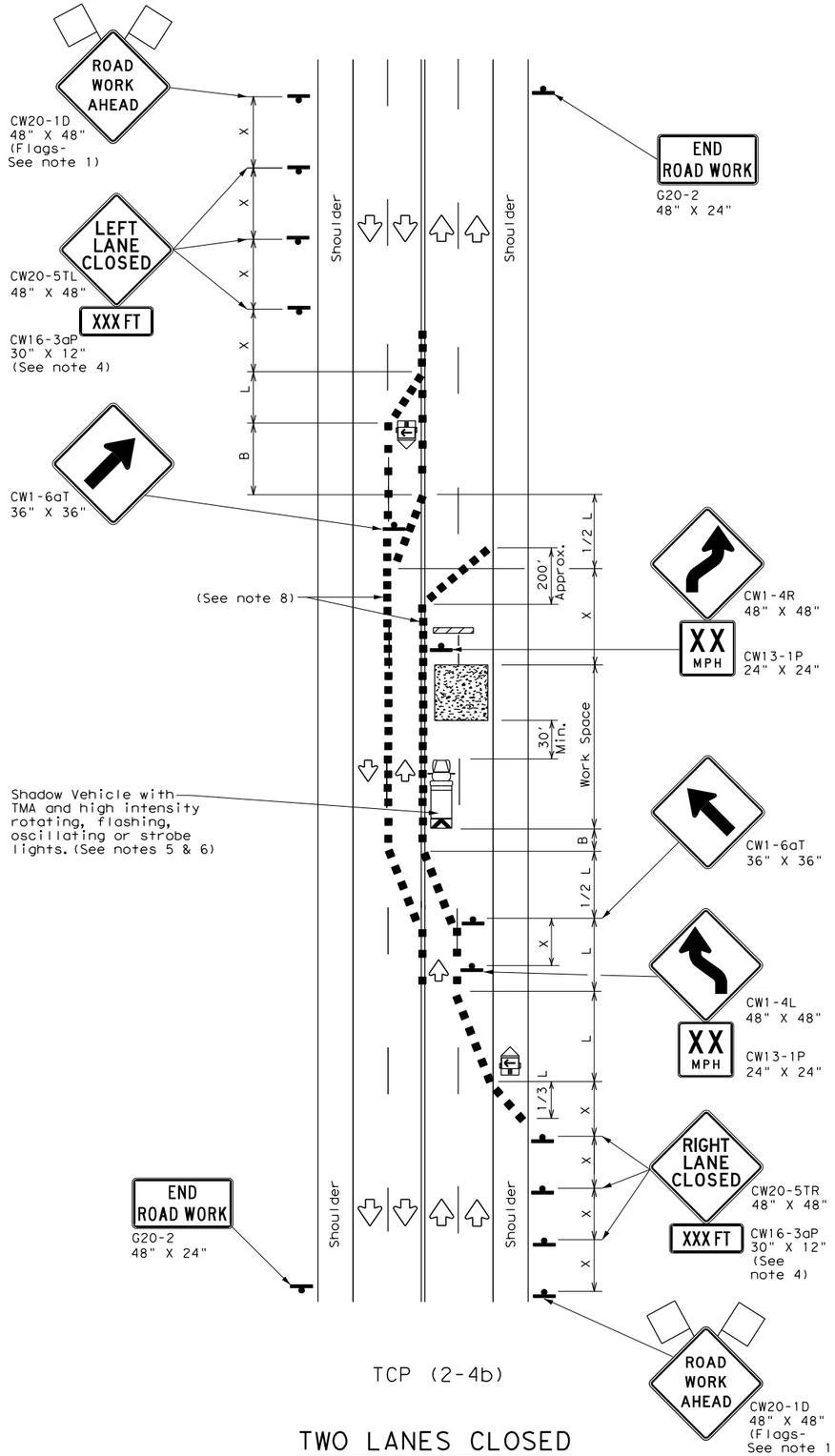

TCP (2-4b)

TWO LANES CLOSED

LEGEND			
	Type 3 Barricade		Channelizing Devices
	Heavy Work Vehicle		Truck Mounted Attenuator (TMA)
	Trailer Mounted Flashing Arrow Board	M	Portable Changeable Message Sign (PCMS)
	Sign		Traffic Flow
	Flag		Flagger

Posted Speed *	Formula	Minimum Desirable Taper Lengths ** 10' Offset	11' Offset	12' Offset	Suggested Maximum Spacing of Channelizing Devices: On a Taper	On a Tangent	Minimum Sign Spacing "X" Distance	Suggested Longitudinal Buffer Space "B"
30	$L=\frac{WS^2}{60}$	150'	165'	180'	30'	60'	120'	90'
35		205'	225'	245'	35'	70'	160'	120'
40		265'	295'	320'	40'	80'	240'	155'
45	L=WS	450'	495'	540'	45'	90'	320'	195'
50		500'	550'	600'	50'	100'	400'	240'
55		550'	605'	660'	55'	110'	500'	295'
60		600'	660'	720'	60'	120'	600'	350'
65		650'	715'	780'	65'	130'	700'	410'
70		700'	770'	840'	70'	140'	800'	475'
75		750'	825'	900'	75'	150'	900'	540'

* Conventional Roads Only

** Taper lengths have been rounded off.
L=Length of Taper(FT) W=Width of Offset(FT) S=Posted Speed(MPH)

TYPICAL USAGE				
MOBILE	SHORT DURATION	SHORT TERM STATIONARY	INTERMEDIATE TERM STATIONARY	LONG TERM STATIONARY
		✓	✓	

GENERAL NOTES

1. Flags attached to signs where shown, are REQUIRED.
2. All traffic control devices illustrated are REQUIRED, except those denoted with the triangle symbol may be omitted when stated elsewhere in the plans, or for routine maintenance work, when approved by the Engineer.
3. The downstream taper is optional. When used, it should be 100 feet minimum length per lane.
4. For short term applications, when post mounted signs are not used, the distance legend may be shown on the sign face rather than on a CW16-3aP supplemental plaque.
5. A Shadow Vehicle with a TMA should be used anytime it can be positioned 30 to 100 feet in advance of the area of crew exposure without adversely affecting the performance or quality of the work. If workers are no longer present but road or work conditions require the traffic control to remain in place, Type 3 Barricades or other channelizing devices may be substituted for the Shadow Vehicle and TMA.
6. Additional Shadow Vehicles with TMAs may be positioned in each closed lane, on the shoulder or off the paved surface, next to those shown in order to protect a wider work space.

TCP (2-4a)

7. If this TCP is used for a left lane closure, CW20-5TL "LEFT LANE CLOSED"signs shall be used and channelizing devices shall be placed on the centerline to protect the work space from opposing traffic with the arrow board placed in the closed lane near the end of the merging taper.

TCP (2-4b)

8. For shorter durations where traffic is directed over a yellow centerline, channelizing devices which separate two-way traffic should be spaced on tapers at 20' or 15' if posted speeds are 35 mph or slower, and for tangent sections, at 1/2(S) where S is the speed in mph. This tighter devices spacing is intended for the area of conflicting markings, not the entire work zone.

Texas Department of Transportation — Traffic Operations Division Standard

TRAFFIC CONTROL PLAN LANE CLOSURES ON MULTILANE CONVENTIONAL ROADS

TCP(2-4)-18

FILE: tcp2-4-18.dgn	DN:	CK:	DW:	CK:
© TxDOT December 1985	CONT	SECT	JOB	HIGHWAY
REVISIONS 8-95 3-03				KLEIN RD
1-97 2-12	DIST	COUNTY		SHEET NO.
4-98 2-18	SAT	GUADALUPE		106

DISCLAIMER:
The use of this standard is governed by the "Texas Engineering Practice Act". No warranty of any kind is made by TxDOT for any purpose whatsoever. TxDOT assumes no responsibility for the conversion of this standard to other formats or for incorrect results or damages resulting from its use.

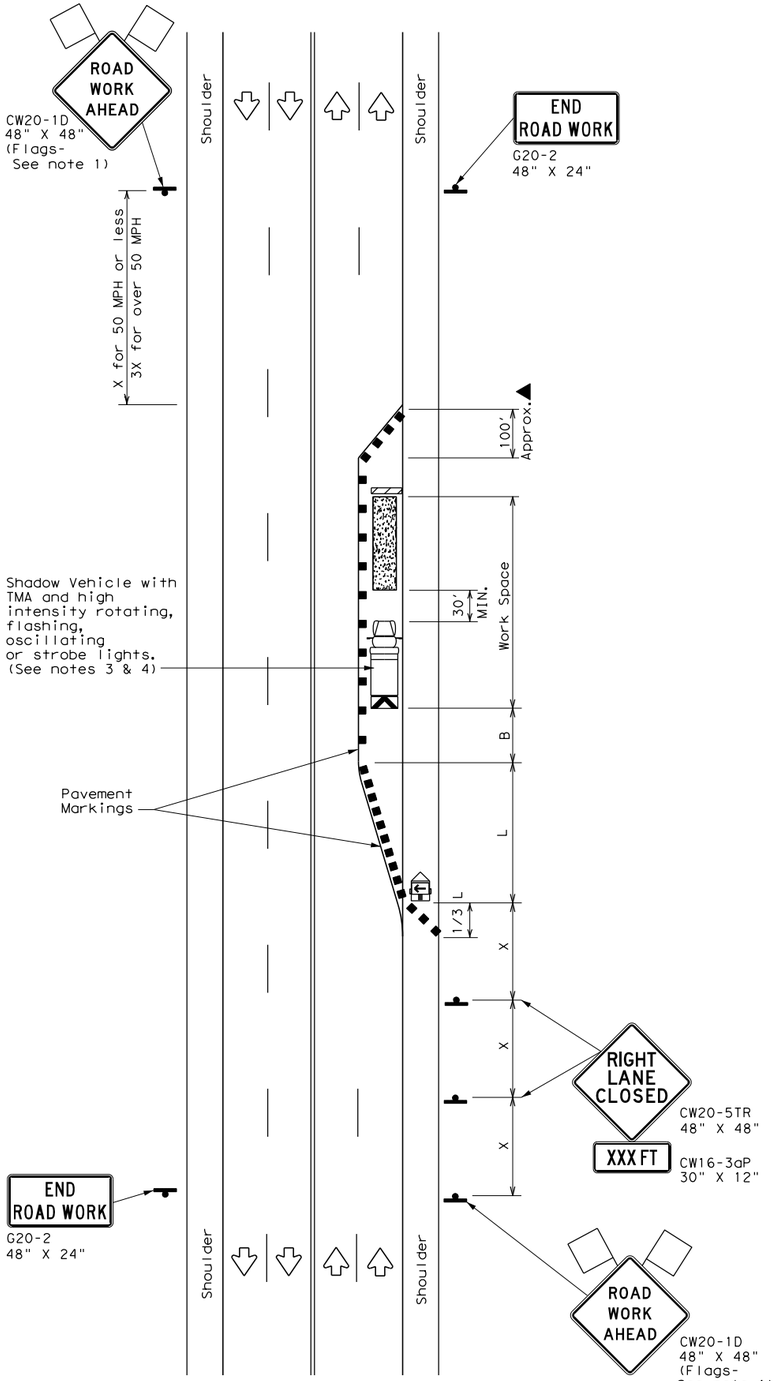

TCP (2-5a)

ONE LANE CLOSED

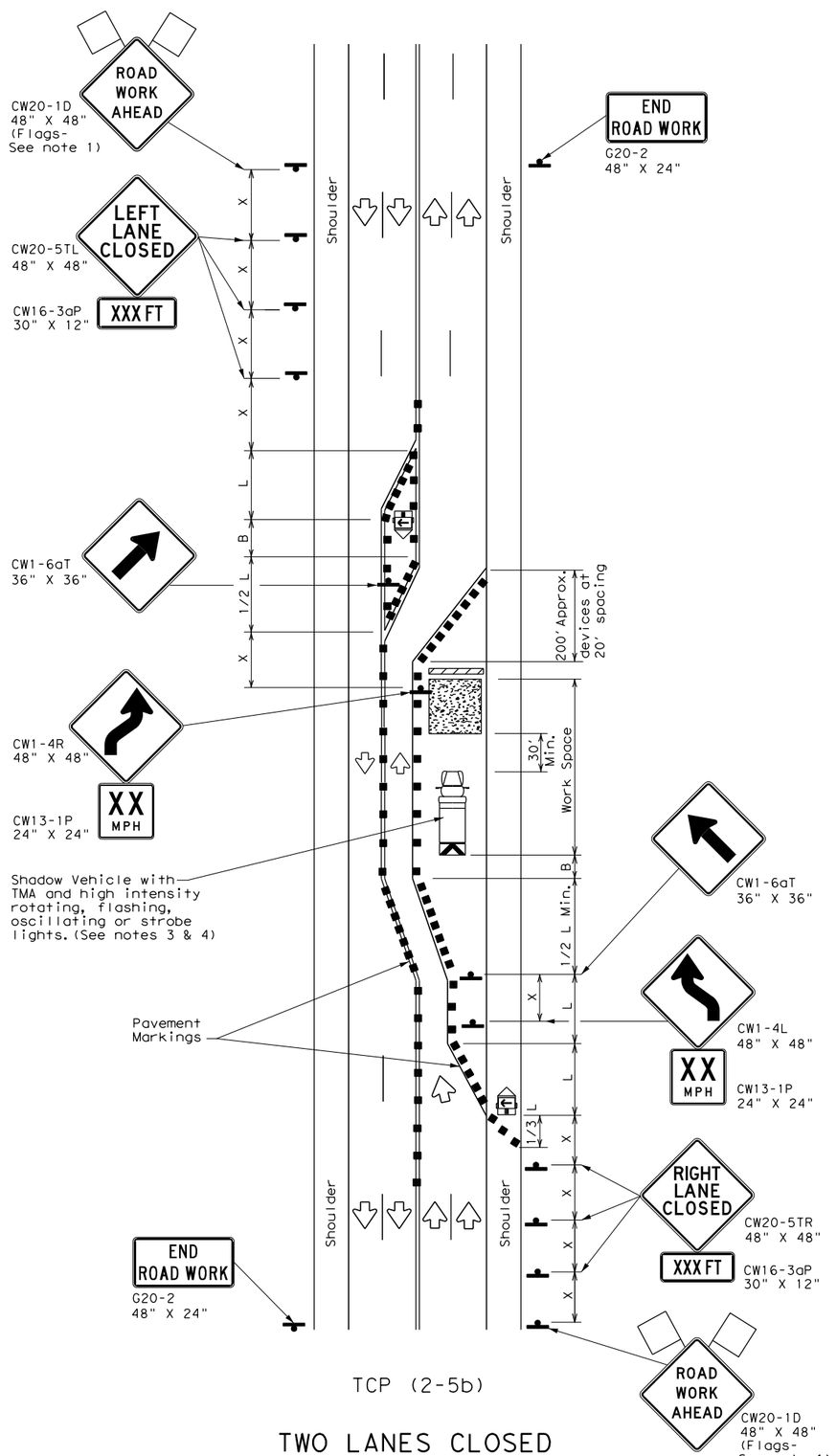

TCP (2-5b)

TWO LANES CLOSED

LEGEND			
	Type 3 Barricade		Channelizing Devices
	Heavy Work Vehicle		Truck Mounted Attenuator (TMA)
	Trailer Mounted Flashing Arrow Board	M	Portable Changeable Message Sign (PCMS)
	Sign		Traffic Flow
	Flag		Flagger

Posted Speed *	Formula	Minimum Desirable Taper Lengths ** 10' Offset	11' Offset	12' Offset	Suggested Maximum Spacing of Channelizing Devices On a Taper	On a Tangent	Minimum Sign Spacing "X" Distance	Suggested Longitudinal Buffer Space "B"
30	$L = \frac{WS^2}{60}$	150'	165'	180'	30'	60'	120'	90'
35		205'	225'	245'	35'	70'	160'	120'
40		265'	295'	320'	40'	80'	240'	155'
45	L=WS	450'	495'	540'	45'	90'	320'	195'
50		500'	550'	600'	50'	100'	400'	240'
55		550'	605'	660'	55'	110'	500'	295'
60		600'	660'	720'	60'	120'	600'	350'
65		650'	715'	780'	65'	130'	700'	410'
70		700'	770'	840'	70'	140'	800'	475'
75		750'	825'	900'	75'	150'	900'	540'

* Conventional Roads Only

** Taper lengths have been rounded off.
L=Length of Taper(FT) W=Width of Offset(FT) S=Posted Speed(MPH)

TYPICAL USAGE				
MOBILE	SHORT DURATION	SHORT TERM STATIONARY	INTERMEDIATE TERM STATIONARY	LONG TERM STATIONARY
			✓	✓

GENERAL NOTES

1. Flags attached to signs where shown, are REQUIRED.
2. All traffic control devices illustrated are REQUIRED, except those denoted with the triangle symbol may be omitted when stated elsewhere in the plans, or for routine maintenance work, when approved by the Engineer.
3. A Shadow Vehicle with a TMA should be used anytime it can be positioned 30 to 100 feet in advance of the area of crew eposure without adversely affecting the performance or quality of the work. If workers are no longer present but road or work conditions require the traffic control to remain in place, Type 3 Barricades or other channelizing devices may be substitutued for the Shadow Vehicle and TMA.
4. Additional Shadow Vehicles with TMAs may be positioned in each closed lane, on the shoulder or off the paved surface, next to those shown in order to protect a wider work space.
5. The downstream taper is optional. When used, it should be 100 feet approximately per lane, with channelizing devices spaced at 20 feet.

TCP (2-5a)

6. If this TCP is used for a left lane closure, CW20-5TL "LEFT LANE CLOSED" signs shall be used and channelizing devices shall be placed on the centerline to protect the work space from opposing traffic, with the arrow board placed in the closed lane near the end of the merging taper.

TCP (2-5b)

7. Conflicting pavement markings shall be removed for long-term projects.

Texas Department of Transportation

Traffic Operations Division Standard

TRAFFIC CONTROL PLAN
LONG TERM LANE CLOSURES
MULTILANE CONVENTIONAL RDS.

TCP(2-5)-18

FILE: tcp2-5-18.dgn	DN:	CK:	DW:	CK:
©TxDOT December 1985	CONT	SECT	JOB	HIGHWAY
REVISIONS 8-95 2-12				KLEIN RD
1-97 3-03	DIST	COUNTY		SHEET NO.
4-98 2-18	SAT	GUADALUPE		107

DATE: 1/9/2020 3:42:28 PM
FILE: H:\Projects\510\30\03\Design\Civil\Standards\TCP\tcp2-5-18.dgn

DISCLAIMER:
The use of this standard is governed by the "Texas Engineering Practice Act". No warranty of any kind is made by TxDOT for any purpose whatsoever. TxDOT assumes no responsibility for the conversion of this standard to other formats or for incorrect results or damages resulting from its use.

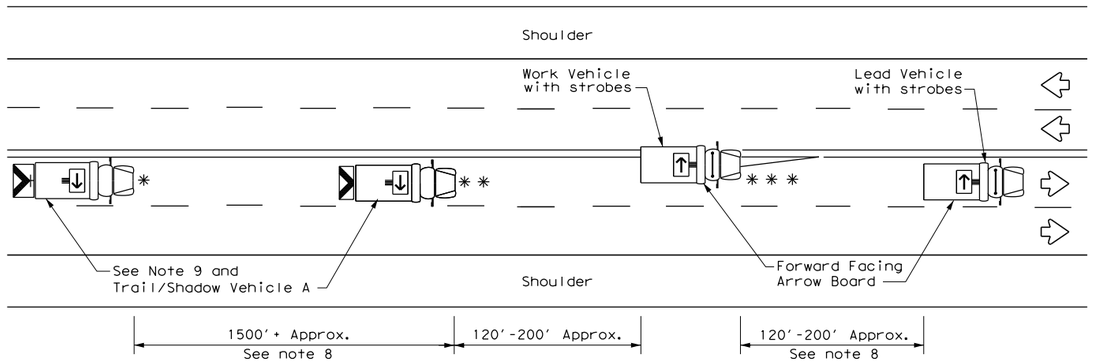

TCP (3-1a)

UNDIVIDED MULTILANE ROADWAY

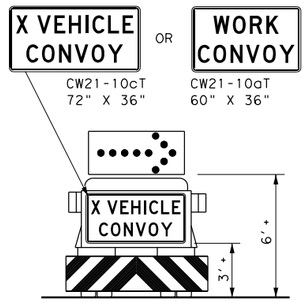

TRAIL/SHADOW VEHICLE A

with RIGHT Directional display Flashing Arrow Board

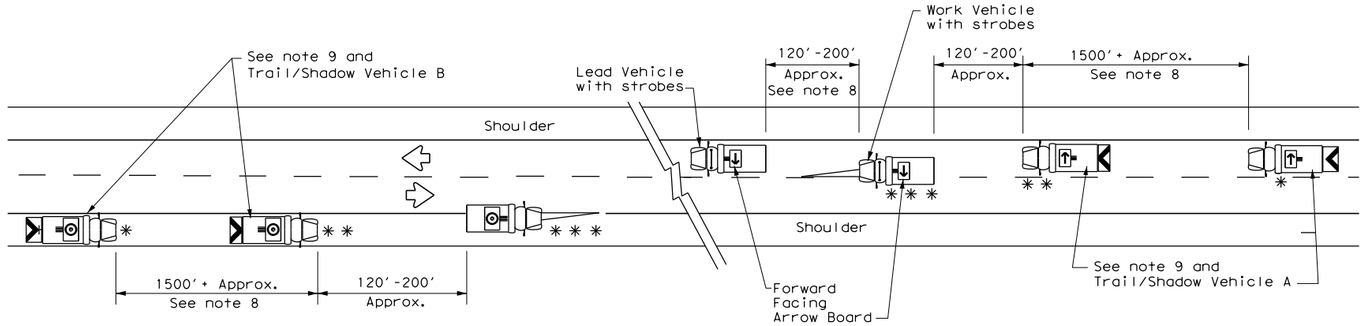

WORK ON SHOULDER

WORK ON TRAVEL LANE

TCP (3-1b)

TWO-WAY ROADWAY WITH PAVED SHOULDERS

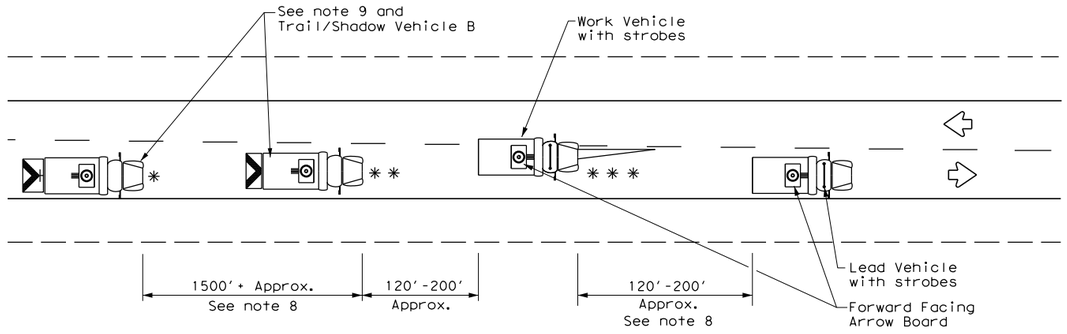

TCP (3-1c)

TWO-WAY ROADWAY WITHOUT PAVED SHOULDERS

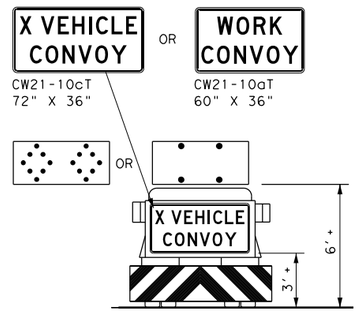

TRAIL/SHADOW VEHICLE B

with Flashing Arrow Board in CAUTION display

LEGEND			
*	Trail Vehicle	ARROW BOARD DISPLAY	
* *	Shadow Vehicle		
* * *	Work Vehicle		RIGHT Directional
	Heavy Work Vehicle		LEFT Directional
	Truck Mounted Attenuator (TMA)		Double Arrow
	Traffic Flow		CAUTION (Alternating Diamond or 4 Corner Flash)

TYPICAL USAGE				
MOBILE	SHORT DURATION	SHORT TERM STATIONARY	INTERMEDIATE TERM STATIONARY	LONG TERM STATIONARY
✓				

GENERAL NOTES

1. TRAIL, SHADOW, and LEAD vehicles shall be equipped with arrow boards as illustrated. When a LEAD vehicle is not used the WORK vehicle must be equipped with an arrow board. The Engineer will determine if the LEAD VEHICLE and/or TRAIL VEHICLE are required based on prevailing roadway conditions, traffic volume, and sight distance restrictions.
2. The use of amber high intensity rotating, flashing, oscillating, or strobe lights on vehicles are required. Blue high intensity rotating, flashing, oscillating or strobe lights when mounted on the driver's side of the vehicle may be operated simultaneously with the amber beacons or strobe lights.
3. The use of truck mounted attenuators (TMA) on the SHADOW VEHICLE and TRAIL VEHICLE are required.
4. Reflective sheeting on the rear of the TMA shall meet or exceed the reflectivity and color requirements of DEPARTMENTAL MATERIAL SPECIFICATION DMS 8300, Type A.
5. Flashing arrow boards shall be Type B or Type C as per the Barricade and Construction (BC) standards. The board shall be controlled from inside the vehicle.
6. Each vehicle shall have two-way radio communication capability.
7. When work convoys must change lanes, the TRAIL VEHICLE should change lanes first to shadow the other convoy vehicles.
8. Vehicle spacing between the TRAIL VEHICLE and the SHADOW VEHICLE will vary depending on sight distance restrictions. Motorists approaching the work convoy should be able to see the TRAIL VEHICLE in time to slow down and/or change lanes as they approach the TRAIL VEHICLE. Vehicle spacing between the WORK VEHICLE and SHADOW VEHICLE and vehicle spacing between WORK VEHICLE and LEAD VEHICLE may vary according to terrain, work activity and other factors.
9. "X VEHICLE CONVOY" (CW21-10cT) or "WORK CONVOY" (CW21-10aT) signs shall be used on TRAIL VEHICLES and SHADOW VEHICLES as shown. As an option 48" X 48" diamond shaped "WORK CONVOY"(CW21-10T) or "X VEHICLE CONVOY" (CW21-10bT) signs may be used where adequate mounting space exists. When used, the X VEHICLE CONVOY sign shall have the number of the convoy vehicles displayed on the sign in the number designation "X" location. The "X VEHICLE CONVOY" sign shall not be used on the SHADOW VEHICLE if a TRAIL VEHICLE is used.
10. On two-lane two-way roadways, the work and protection vehicles should pull over periodically to allow motor vehicle traffic to pass. If motorists are not allowed to pass the work convoy, a "DO NOT PASS" (R4-1) sign should be placed on the back of the rearmost protection vehicle.

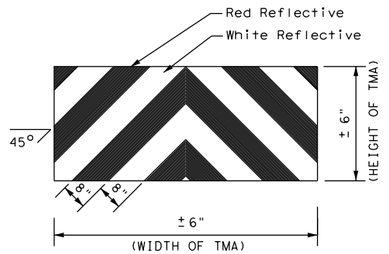

STRIPING FOR TMA

Texas Department of Transportation

Traffic Operations Division Standard

TRAFFIC CONTROL PLAN MOBILE OPERATIONS UNDIVIDED HIGHWAYS

TCP(3-1)-13

FILE: tcp3-1.dgn	DN: TxDOT	CK: TxDOT	DW: TxDOT	CK: TxDOT
©TxDOT December 1985	CONT	SECT	JOB	HIGHWAY
REVISIONS 2-94 4-98 8-95 7-13 1-97				KLEIN RD
	DIST	COUNTY		SHEET NO.
	SAT	GUADALUPE		108

DATE: 1/9/2020 3:42:29 PM
FILE: H:\Projects\510\30\03\Design\Civil\Standards\TCP\tcp3-1.dgn

DISCLAIMER:
The use of this standard is governed by the "Texas Engineering Practice Act". No warranty of any kind is made by TxDOT for any purpose whatsoever. TxDOT assumes no responsibility for the conversion of this standard to other formats or for incorrect results or damages resulting from its use.

DATE: 1/9/2020 3:42:31 PM
FILE: H:\Projects\5170\30\03\Design\Civil\Standards\TCP\wzstpm-13.dgn

WORK ZONE SHORT TERM PAVEMENT MARKINGS DETAILS

SOLID LINES

DOUBLE NO-PASSING LINE

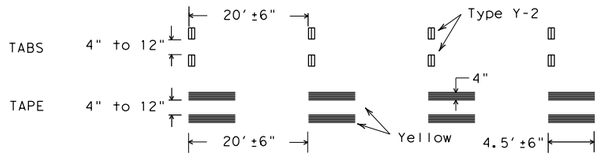

SINGLE NO-PASSING LINE or CHANNELIZATION LINE

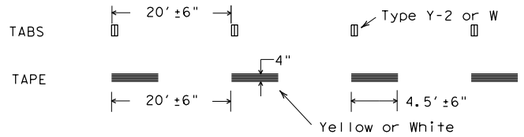

BROKEN LINES

(FOR CENTER LINE OR LANE LINE)

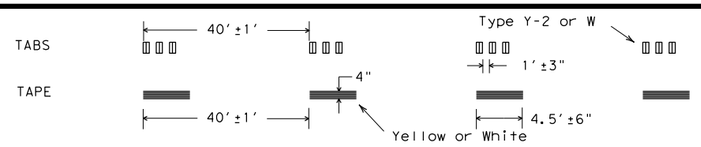

WIDE DOTTED LINES

(FOR LANE DROP LINES)

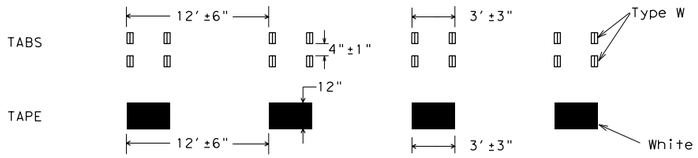

WIDE GORE MARKINGS

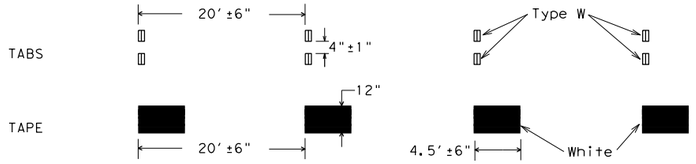

NOTES:

1. Short term pavement markings may be prefabricated markings (stick down tape) or temporary flexible-reflective roadway marker tabs unless otherwise specified elsewhere in plans.
2. Short term pavement markings shall NOT be used to simulate edge lines.
3. Dimensions indicated on this sheet are typical and approximate. Variations in size and height may occur between markers or devices made by manufacturers, by as much as 1/4 inch, unless otherwise noted.
4. Temporary flexible-reflective roadway marker tabs will require normal maintenance replacement when used on roadways with an ADT per lane of up to 7500 vehicles with no more than 10% truck mix. When roadways exceed these values, additional maintenance replacement of devices should be planned.
5. No segment of roadway open to traffic shall remain without permanent pavement markings for a period greater than 14 calendar days. The Contractor will be responsible for maintaining short term pavement markings until permanent pavement markings are in place. When the Contractor is responsible for placement of permanent pavement markings, no segment of roadway shall remain without permanent pavement markings for a period greater than 14 calendar days unless weather conditions prohibit placement. Permanent pavement markings shall be placed as soon as weather permits.
6. For two lane, two-way roadways, DO NOT PASS signs shall be erected to mark the beginning of sections where passing is prohibited and PASS WITH CARE signs shall be erected to mark the beginning of sections where passing is permitted. Signs shall be in accordance with the "Texas Manual on Uniform Traffic Control Devices" (TMUTCD) and may be used to indicate the limits of no-passing zones for up to 14 calendar days. Permanent pavement markings should then be placed.
7. For low volume two lane, two-way roadways of 4000 ADT or less, no-passing lines may be omitted when approved by the Engineer. DO NOT PASS and PASS WITH CARE signs shall be erected (see note 6).
8. For exit gores where a lane is being dropped place wide gore markings or retroreflective channelizing devices to guide motorist through the exit. If channelizing devices are to be used it should be noted elsewhere in the plans. One piece cones are not allowed for this purpose.

TEMPORARY FLEXIBLE, REFLECTIVE ROADWAY MARKER TABS (TABS)

1. Temporary flexible-reflective roadway marker tabs detailed on this sheet will be designated Type Y-2 (two amber reflective surfaces with yellow body); Type Y (one amber reflective surface with yellow body); and Type W (one white or silver reflective surface with white body). Additional details may be found on BC(11).
2. Tabs shall meet requirements of Departmental Material Specification DMS-8242.
3. When dry, tabs shall be visible for a minimum distance of 200 feet during normal daylight hours and when illuminated by automobile low-beam head light at night, unless sight distance is restricted by roadway geometrics.
4. No two consecutive tabs nor four tabs per 1000 feet of line shall be missing or fail to meet the visual performance requirements of Note 3.

WORK ZONE SHORT TERM PAVEMENT MARKINGS PATTERNS

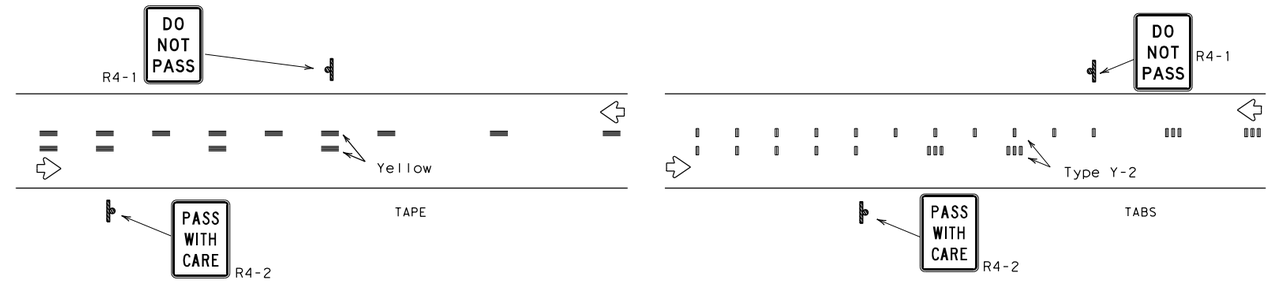

CENTER LINE & NO-PASSING ZONE BARRIER LINES FOR TWO LANE TWO-WAY HIGHWAYS

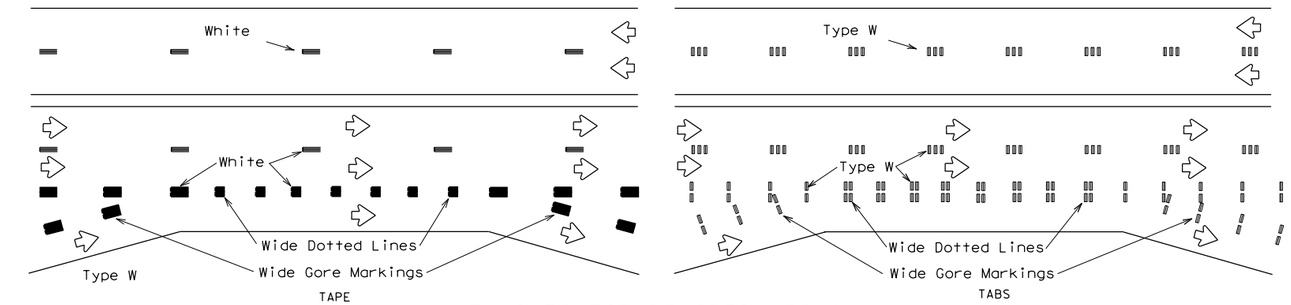

LANE LINES FOR DIVIDED HIGHWAY

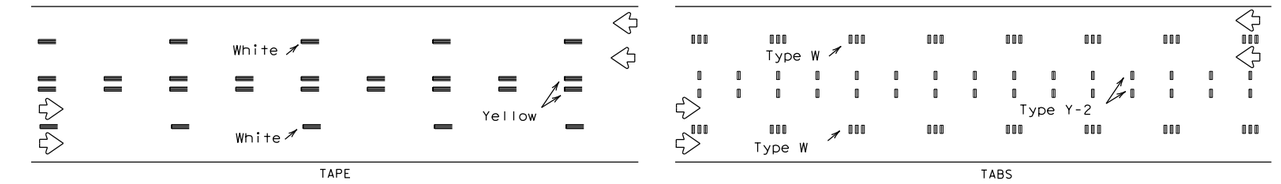

LANE & CENTER LINES FOR MULTILANE UNDIVIDED HIGHWAYS

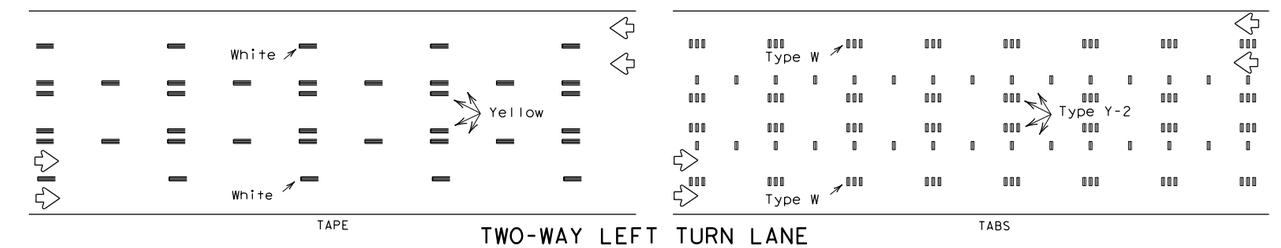

TWO-WAY LEFT TURN LANE

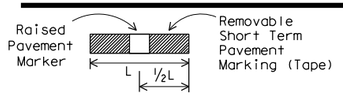

If raised pavement markers are used to supplement REMOVABLE short term markings, the markers shall be applied to the top of the tape at the approximate mid length of the tape. This allows an easier removal of raised markers and tape.

PREFABRICATED PAVEMENT MARKINGS

1. Temporary Removable Prefabricated Pavement Markings shall meet the requirements of DMS-8241.
2. Non-removable Prefabricated Pavement Markings shall meet the requirements of either DMS-8240 "Permanent Prefabricated Pavement Markings" or DMS-8243 "Temporary Costruction-Grade Prefabricated Pavement Markings."

RAISED PAVEMENT MARKERS

1. All raised pavement markers used for work zone markings shall meet the requirements of Item 672, "RAISED PAVEMENT MARKERS" and DMS-4200.

DEPARTMENTAL MATERIAL SPECIFICATIONS (DMS) & MATERIAL PRODUCER LISTS (MPL)

1. DMSs referenced above can be found along with embedded links to their respective MPLs at the following website:
   http://www.txdot.gov/business/contractors_consultants/material_specifications/default.htm

Texas Department of Transportation

Traffic Operations Division Standard

WORK ZONE SHORT TERM PAVEMENT MARKINGS

WZ(STPM)-13

FILE:	wzstpm-13.dgn	DN: TxDOT	CK: TxDOT	DW: TxDOT	CK: TxDOT
©TxDOT	April 1992	CONT	SECT	JOB	HIGHWAY
REVISIONS					KLEIN RD
1-97		DIST	COUNTY		SHEET NO.
3-03		SAT	GUADALUPE		109
7-13					

111

DISCLAIMER:
The use of this standard is governed by the "Texas Engineering Practice Act". No warranty of any kind is made by TxDOT for any purpose whatsoever. TxDOT assumes no responsibility for the conversion of this standard to other formats or for incorrect results or damages resulting from its use.

DATE: 1/9/2020 3:42:33 PM
FILE: H:\projects\510\30\03\Design\Civil\Standards\TCP\wzul-13.dgn

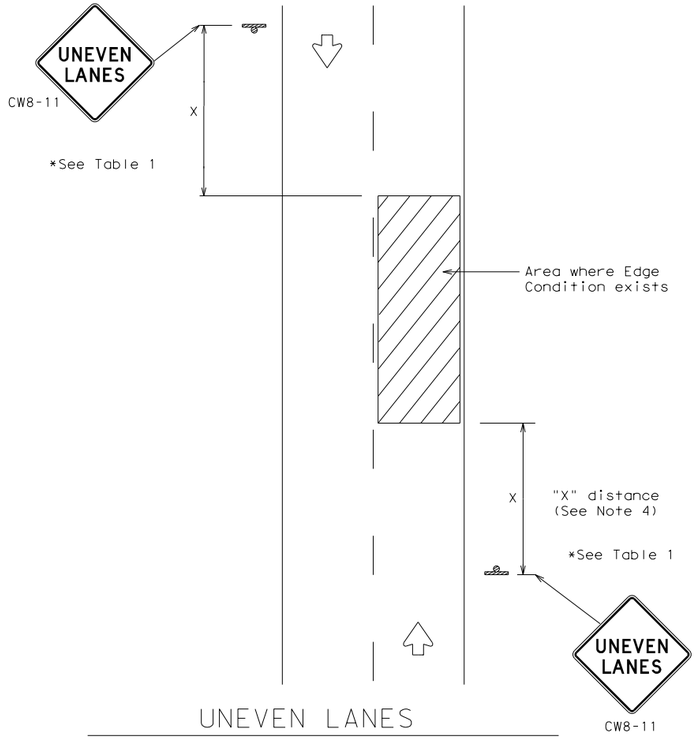

UNEVEN LANES
TWO LANE CONVENTIONAL ROAD

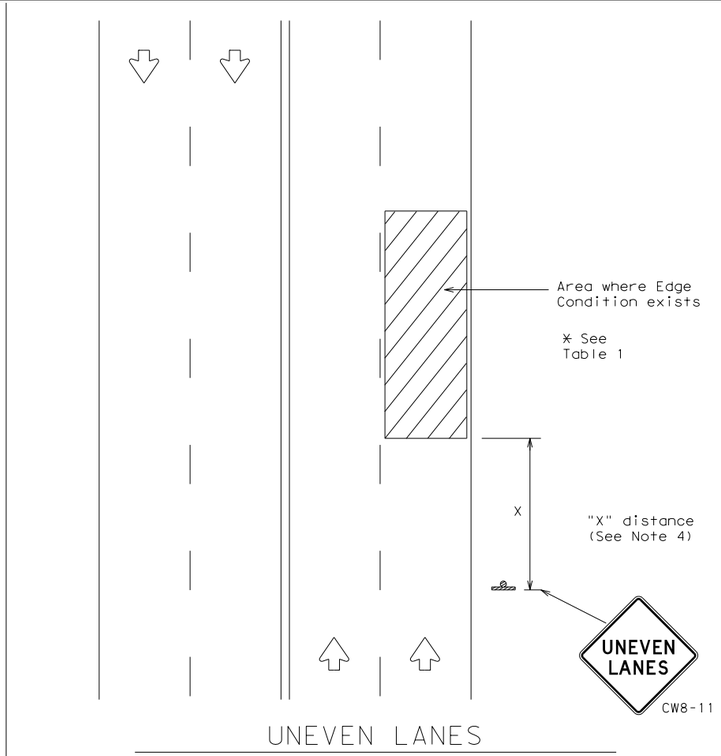

UNEVEN LANES
FOUR LANE CONVENTIONAL ROAD

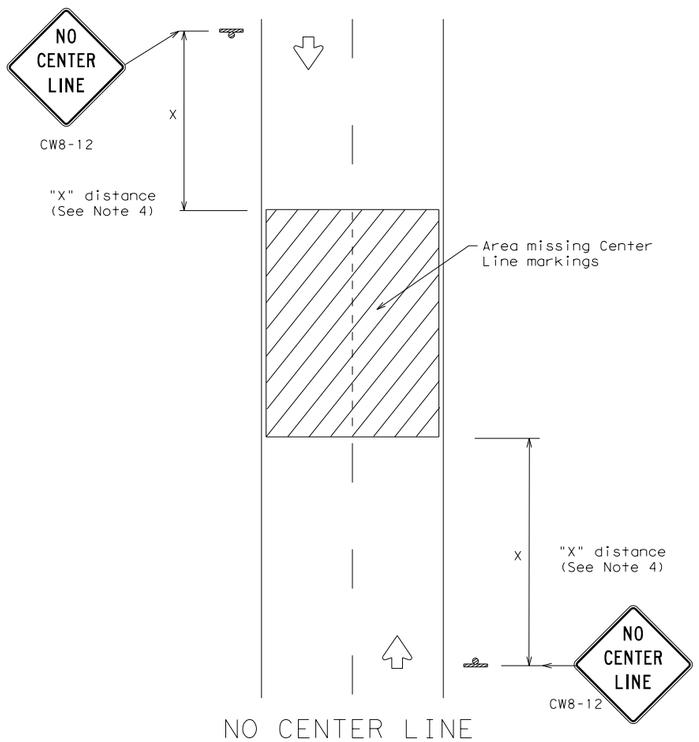

NO CENTER LINE
TWO LANE CONVENTIONAL ROAD

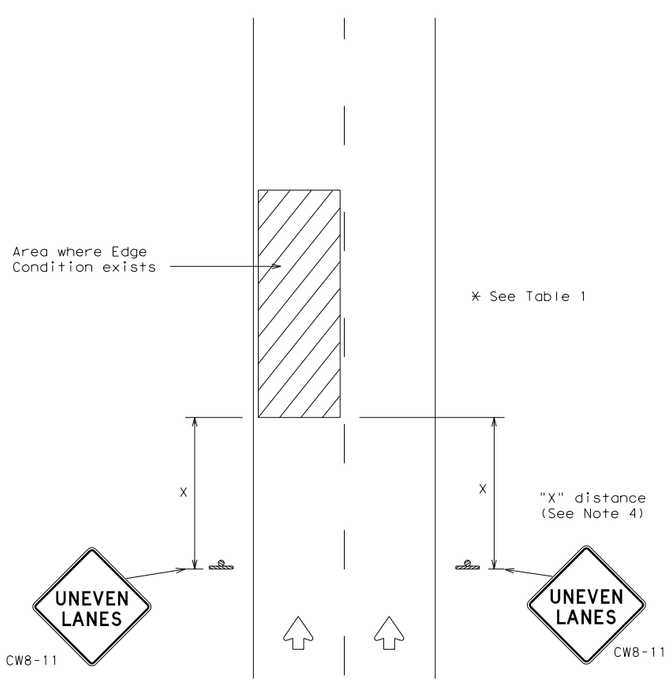

UNEVEN LANES
DIVIDED ROADWAY

DEPARTMENTAL MATERIAL SPECIFICATIONS	
PERMANENT PREFABRICATED PAVEMENT MARKINGS	DMS-8240
TEMPORARY (REMOVABLE) PREFABRICATED PAVEMENT MARKINGS	DMS-8241
SIGN FACE MATERIALS	DMS-8300

COLOR	USAGE	SHEETING MATERIAL
ORANGE	BACKGROUND	TYPE B_{FL} OR TYPE C_{FL} SHEETING
BLACK	LEGEND & BORDERS	ACRYLIC NON-REFLECTIVE SHEETING

GENERAL NOTES

1. If spalling or holes occur, ROUGH ROAD (CW8-8) signs should be placed in advance of the condition and be repeated every two miles where the condition persists.
2. UNEVEN LANES (CW8-11) signs shall be installed in advance of the condition and repeated every mile. Signs installed along the uneven lane condition may be supplemented with the NEXT XX MILES (CW7-3aP) plaque or Advisory Speed (CW13-1P) plaque.
3. NO CENTER LINE (CW8-12) signs and temporary pavement markings as per the WZ(STPM) standard shall be installed if yellow centerlines separating two way traffic are obscured or obliterated. Repeat NO CENTER LINE signs every two miles where the center line markings are not in place. The signs and markings shall remain in place until permanent pavement markings are installed.
4. Signs shall be spaced at the distances recommended as per BC standards.
5. Additional signs may be required as directed by the Engineer. Signs shall remain in place until final surface is applied. Signs shall be considered subsidiary to Item 502 "BARRICADES, SIGNS AND TRAFFIC HANDLING."
6. Signs shall be fabricated and mounted on supports as shown on the BC standards and/or listed on the "Compliant Work Zone Traffic Control Devices" list.
7. Short term markings shall not be used to simulate edge lines.
8. All signs shall be constructed in accordance with the details found in the "Standard Highway Sign Designs for Texas," latest edition.

TABLE 1

Edge Condition	Edge Height (D)	* Warning Devices
① 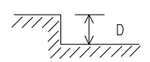	Less than or equal to: 1¼" (maximum-planing) 1½" (typical-overlay)	Sign: CW8-11
	Distance "D" may be a maximum of 1 1/4 " for planing operations and 2" for overlay operations if uneven lanes with edge condition 1 are open to traffic after work operations cease.	
② 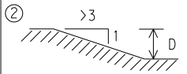	Less than or equal to 3"	Sign: CW8-11
③ 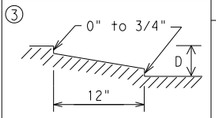 Notched Wedge Joint	Distance "D" may be a maximum of 3" if uneven lanes with edge condition 2 or 3 are open to traffic after work operations cease. Uneven lanes should not be open to traffic when "D" is greater than 3".	

TRAFFIC CONTROL DURING PLANING, OVERLAY AND LEVELING OPERATIONS ARE SHOWN ELSEWHERE IN THE PLANS.

MINIMUM WARNING SIGN SIZE	
Conventional roads	36" x 36"
Freeways/expressways, divided roadways	48" x 48"

Texas Department of Transportation

Traffic Operations Division Standard

SIGNING FOR UNEVEN LANES

WZ(UL)-13

FILE: wzul-13.dgn	DN: TxDOT	CK: TxDOT	DW: TxDOT	CK: TxDOT
©TxDOT April 1992	CONT	SECT	JOB	HIGHWAY
REVISIONS				KLEIN RD
8-95 2-98 7-13	DIST	COUNTY		SHEET NO.
1-97 3-03	SAT	GUADALUPE		110

DISCLAIMER:
The use of this standard is governed by the "Texas Engineering Practice Act". No warranty of any kind is made by TxDOT for any purpose whatsoever. TxDOT assumes no responsibility for the conversion of this standard to other formats or for incorrect results or damages resulting from its use.

DATE: 1/9/2020 3:42:36 PM
FILE: H:\projects\510130\03\Design\Civil\Standards\TCP\wzrcd-13.dgn

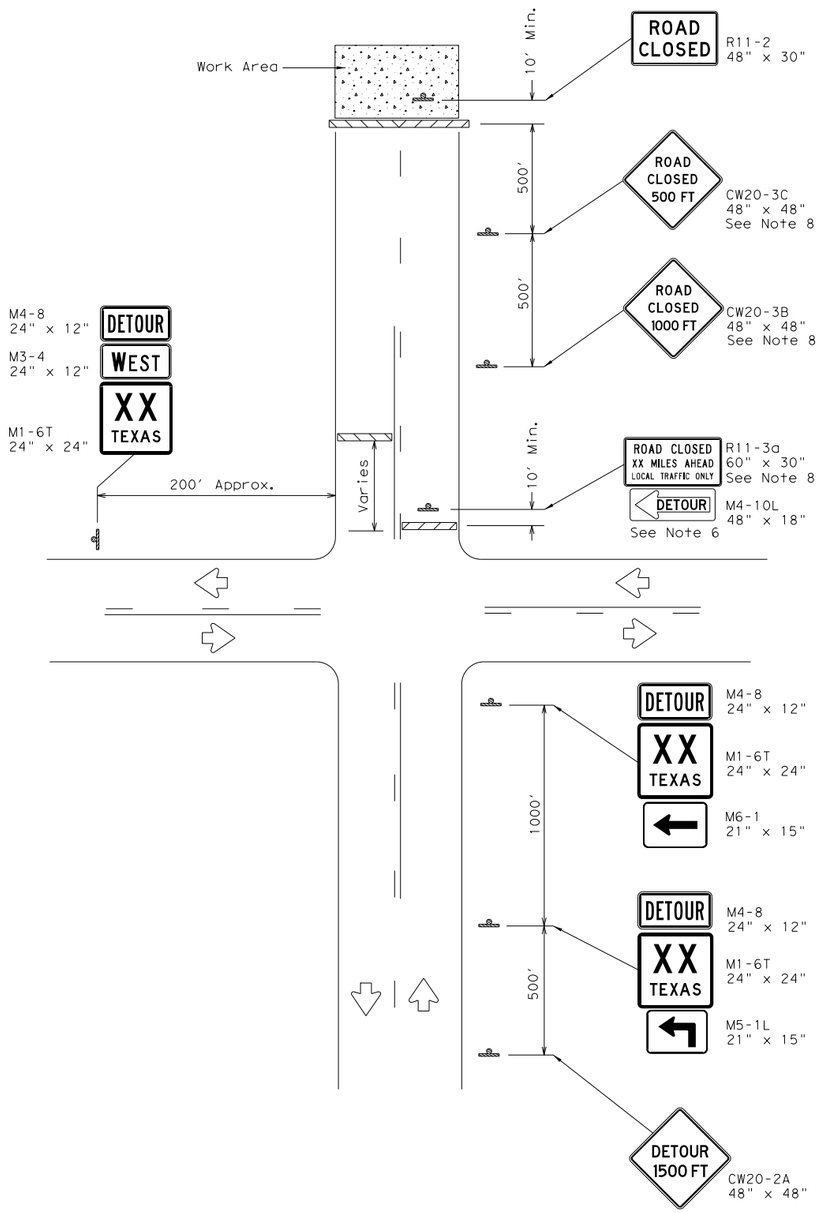

ROAD CLOSURE BEYOND THE INTERSECTION

Signing for a Numbered Route with an Off-Site Detour

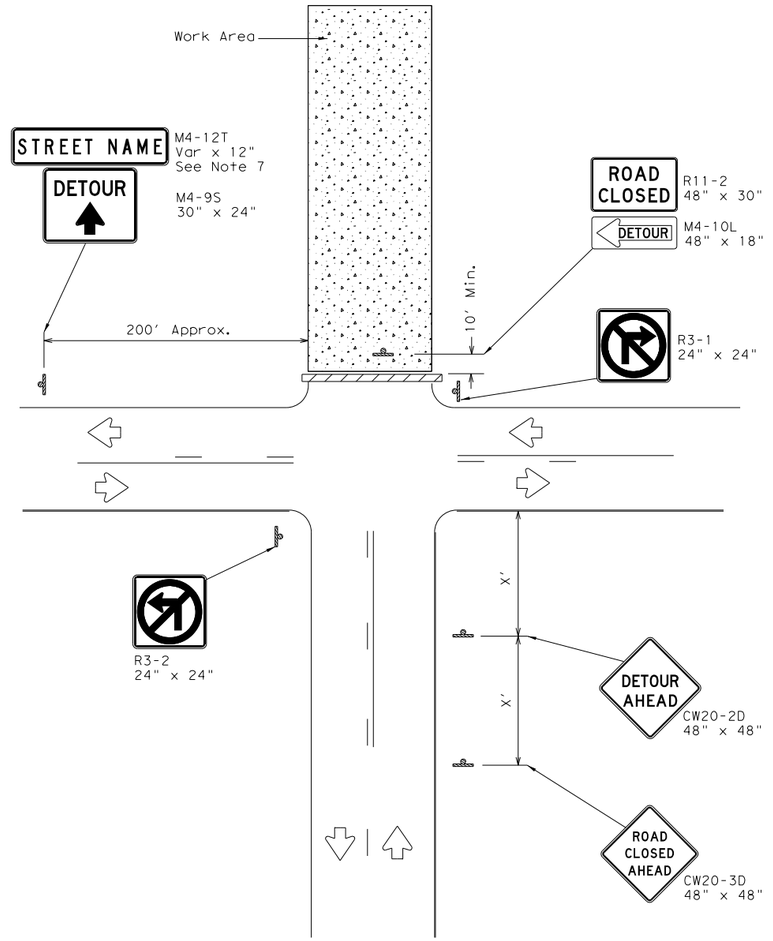

ROAD CLOSURE AT THE INTERSECTION

Signing for an Un-numbered Route with an Off-Site Detour

LEGEND	
	Type 3 Barricade
	Sign

Posted Speed *	Minimum Sign Spacing "X" Distance
30	120'
35	160'
40	240'
45	320'
50	400'
55	500'
60	600'
65	700'
70	800'
75	900'

* Conventional Roads Only

GENERAL NOTES

1. This sheet is intended to provide details for temporary work zone road closures. For permanent road closure details see the D&OM standards.
2. Barricades used shall meet the requirements shown on Barricade and Construction Standard BC(10) and listed on the Compliant Work Zone Traffic Control Devices list (CWZTCD).
3. Stockpiled materials shall not be placed on the traffic side of barricades.
4. Barricades at the road closure should extend from pavement edge to pavement edge.
5. Detour signing shown is intended to illustrate the type of signing that is appropriate for numbered routes or un-numbered routes as labeled. It does not indicate the full extent of detour signing required. Detour routes should be signed as shown elsewhere in the plans.
6. If the road is open for a significant distance beyond the intersection or there are significant origin/destination points beyond the intersection, the signs and barricades at this location should be located at the edge of the traveled way.
7. The Street Name (M4-12T) sign is to be placed above the DETOUR (M4-9S) sign.
8. For urban areas where there is a shorter distance between the intersection and the actual closure location, the ROAD CLOSED XX MILES AHEAD (R11-3a) sign may be replaced with a ROAD CLOSED TO THRU TRAFFIC (R11-4) sign. If adequate space does not exist between the intersection and the closure a single ROAD CLOSED AHEAD (CW20-3D) sign spaced as per the table above may replace the ROAD CLOSED 1000 FT (CW20-3B) and ROAD CLOSED 500 FT (CW20-3C) signs.
9. Signs and barricades shown shall be subsidiary to Item 502. Locations where these details will be required shall be as shown elsewhere in the plans.

Texas Department of Transportation

Traffic Operations Division Standard

WORK ZONE ROAD CLOSURE DETAILS

WZ(RCD)-13

FILE: wzrcd-13.dgn	DN: TxDOT	CK: TxDOT	DW: TxDOT	CK: TxDOT
©TxDOT August 1995	CONT	SECT	JOB	HIGHWAY
REVISIONS				KLEIN RD
1-97 4-98 7-13	DIST	COUNTY		SHEET NO.
2-98 3-03	SAT	GUADALUPE		111

113

DISCLAIMER:
The use of this standard is governed by the "Texas Engineering Practice Act". No warranty of any kind is made by TxDOT for any purpose whatsoever. TxDOT assumes no responsibility for the conversion of this standard to other formats or for incorrect results or damages resulting from its use.

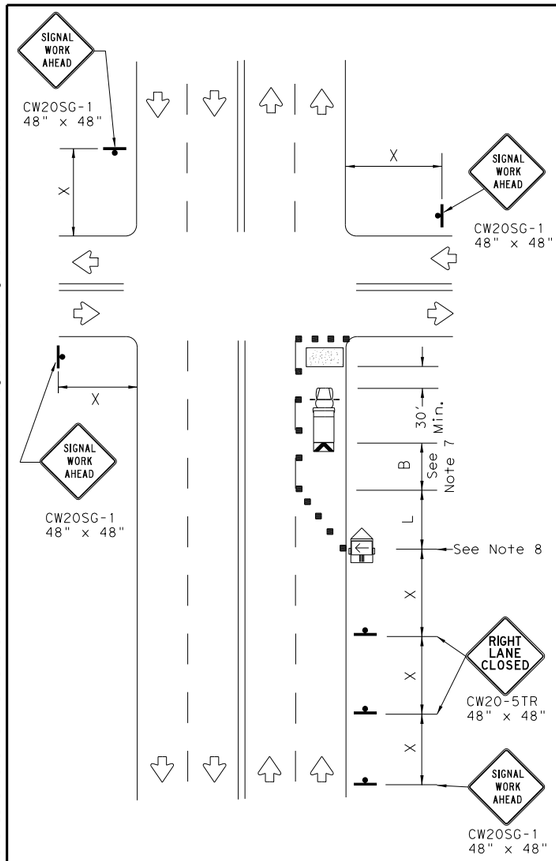

NEAR SIDE LANE CLOSURE

SHORT DURATION OR SHORT TERM STATIONARY

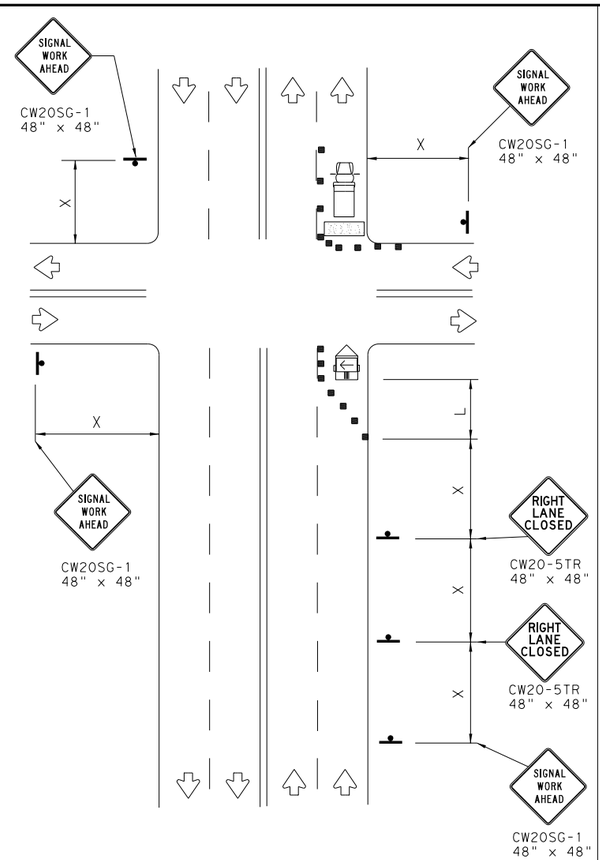

FAR SIDE RIGHT LANE CLOSURE

SHORT DURATION OR SHORT TERM STATIONARY

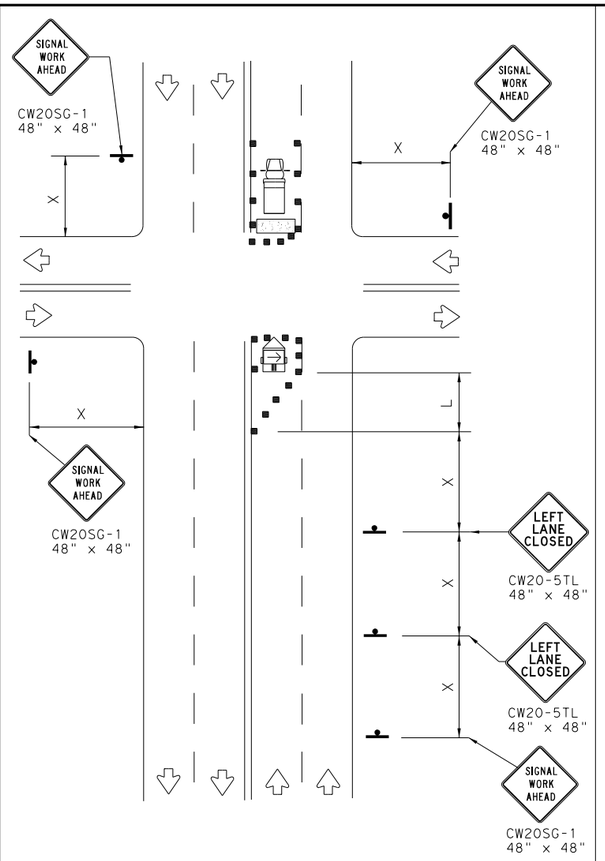

FAR SIDE LEFT LANE CLOSURE

SHORT DURATION OR SHORT TERM STATIONARY

LEGEND			
	Type 3 Barricade		Channelizing Devices
	Heavy Work Vehicle		Truck Mounted Attenuator (TMA)
	Trailer Mounted Flashing Arrow Board	M	Portable Changeable Message Sign (PCMS)
	Sign		Traffic Flow
	Flag		Flagger

Posted Speed *	Formula	Minimum Desirable Taper Lengths ** 10' Offset	11' Offset	12' Offset	Suggested Maximum Spacing of Channelizing Devices On a Taper	On a Tangent	Minimum Sign Spacing "X" Distance	Suggested Longitudinal Buffer Space "B"
30	$L = \frac{WS^2}{60}$	150'	165'	180'	30'	60'	120'	90'
35		205'	225'	245'	35'	70'	160'	120'
40		265'	295'	320'	40'	80'	240'	155'
45	L = WS	450'	495'	540'	45'	90'	320'	195'
50		500'	550'	600'	50'	100'	400'	240'
55		550'	605'	660'	55'	110'	500'	295'
60		600'	660'	720'	60'	120'	600'	350'
65		650'	715'	780'	65'	130'	700'	410'
70		700'	770'	840'	70'	140'	800'	475'
75		750'	825'	900'	75'	150'	900'	540'

* Conventional Roads Only

** Taper lengths have been rounded off.
L=Length of Taper(FT) W=Width of Offset(FT) S=Posted Speed(MPH)

WORKERS IN BUCKET TRUCKS SHALL NOT WORK ABOVE OPEN LANES OF TRAFFIC.

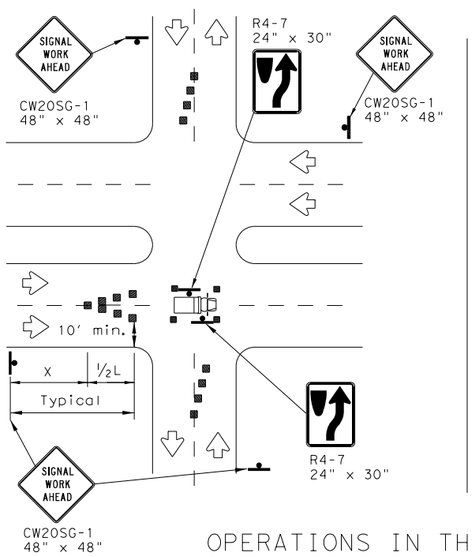

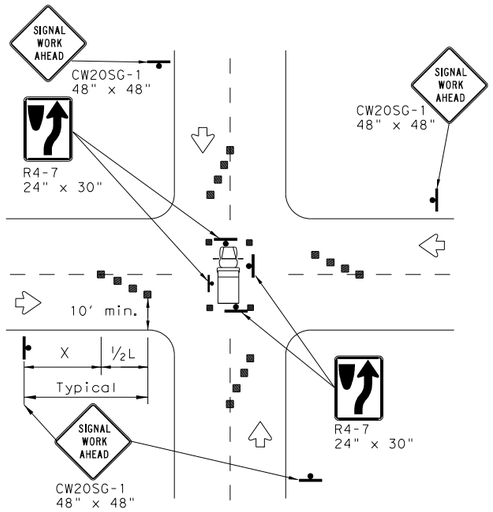

OPERATIONS IN THE INTERSECTION

SHORT DURATION

GENERAL NOTES

1. The minimum size channelizing device is the 28" cone. 42" Two-piece cones, drums, vertical panels or barricades will be required when the device must be left unattended at night.
2. Obstructions or hazards at the work area shall be clearly marked and delineated at all times.
3. Flaggers and Flagger Symbol (CW20-7) signs may be required according to field conditions.
4. Vehicles parked in roadway shall be equipped with at least two high intensity rotating, flashing, oscillating or strobe type lights.
5. High level warning devices (flag trees) may be used at corners of the vehicle.
6. When work operations are performed on existing signals, the signals may be placed in flashing red mode when approved by the engineer. If existing signals do not have power, All-Way Stop (R1-1 and R1-3P) signs may be implemented when approved by the engineer.
7. For Short-Term Stationary work the buffer space "B" from the above table should be used if field conditions permit. For Short Duration (less than 1 hour) any buffer space provided will enhance the safety of the setup.
8. The arrow board at this location may be omitted for Short Duration work if the work vehicle has an arrow board in operation. As an option, the arrow board may be placed at the end of the taper in the closed lane if space is not available at the beginning of the taper.
9. Signs and devices for the NEAR SIDE LANE CLOSURE may be altered for a left lane closure by using a LEFT LANE CLOSED (CW20-5TL) and adding channelizing devices on the centerline to protect the work space from opposing traffic.

Texas Department of Transportation | Traffic Operations Division Standard

TRAFFIC SIGNAL WORK TYPICAL DETAILS

WZ(BTS-1)-13

FILE: wzbts-13.dgn	DN: TxDOT	CK: TxDOT	DW: TxDOT	CK: TxDOT
©TxDOT April 1992	CONT	SECT	JOB	HIGHWAY
REVISIONS				KLEIN RD
2-98 10-99 7-13	DIST	COUNTY		SHEET NO.
4-98 3-03	SAT	GUADALUPE		112

DATE: 1/9/2020 3:42:38 PM
FILE: H:\projects\510\30\03\Design\Civil\Standards\TCP\wzbts-13.dgn

DISCLAIMER:
The use of this standard is governed by the "Texas Engineering Practice Act". No warranty of any kind is made by TxDOT for any purpose whatsoever. TxDOT assumes no responsibility for the conversion of this standard to other formats or for incorrect results or damages resulting from its use.

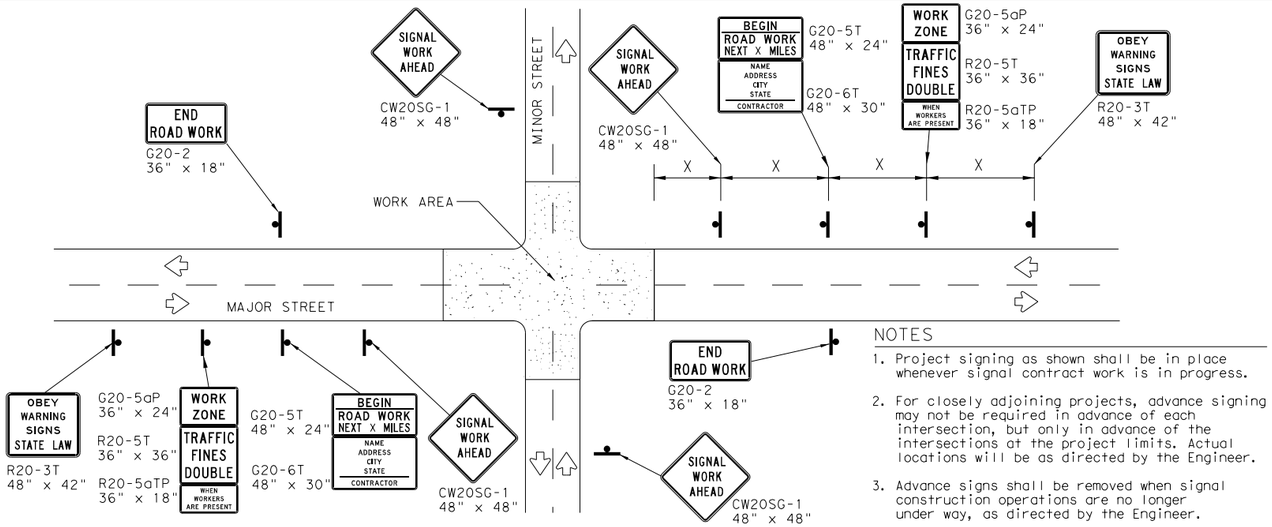

TYPICAL ADVANCE SIGNAL PROJECT SIGNING

FOR LONG TERM and INTERMEDIATE-TERM STATIONARY WORK OPERATIONS

NOTES

1. Project signing as shown shall be in place whenever signal contract work is in progress.
2. For closely adjoining projects, advance signing may not be required in advance of each intersection, but only in advance of the intersections at the project limits. Actual locations will be as directed by the Engineer.
3. Advance signs shall be removed when signal construction operations are no longer under way, as directed by the Engineer.
4. Warning sign spacing shown is typical for both directions.
5. See the Table on sheet 1 of 2 for Typical warning sign spacing.

GENERAL NOTES FOR WORK ZONE SIGNS

1. Signs shall be installed and maintained in a straight and plumb condition.
2. Wooden sign posts shall be painted white.
3. Barricades shall NOT be used as sign supports.
4. Nails shall NOT be used to attach signs to any support.
5. All signs shall be installed in accordance with the plans or as directed by the Engineer.
6. The Contractor shall furnish the sign design shown in the plans or in the "Standard Highway Sign Designs for Texas" (SHSD).
7. The Contractor shall furnish sign supports and substrates listed in the "Compliant Work Zone Traffic Control Device List" (CWZTCD), installed as per the manufacturer's recommendations.
8. Temporary signs that have damaged or cracked substrates and/or damaged or marred reflective sheeting shall be replaced as directed by the Engineer.
9. Identification markings may be shown only on the back of the sign substrate. The maximum height of letters and/or company logos used for identification shall be 1".
10. Damaged wood posts shall be replaced. Splicing wood posts will not be allowed.

DURATION OF WORK

1. Work zone durations are defined in Part 6, Section 6G.02 of the Texas Manual on Uniform Traffic Control Devices (TMUTCD).

SIGN MOUNTING HEIGHT

1. Sign height of Long-term/Intermediate-term warning signs shall be as shown on Figure 6F-1 of the TMUTCD.
2. Sign height of Short-term/Short Duration warning signs shall be as shown on Figure 6F-2 of the TMUTCD.
3. Regulatory signs shall be mounted at least 7 feet, but not more than 9 feet, above the paved surface regardless of work duration.

REMOVING OR COVERING

1. When sign messages may be confusing or do not apply, the signs shall be removed or completely covered, unless otherwise approved by the Engineer.
2. When signs are covered, the material used shall be opaque, such as heavy mil black plastic, or other materials which will cover the entire sign face and maintain their opaque properties under automobile headlights at night without damaging the sign sheeting. Burlap, or heavy materials such as plywood or aluminum shall not be used to cover signs.
3. Duct tape or other adhesive material shall NOT be affixed to a sign face.
4. Signs and anchor stubs shall be removed and holes back filled upon completion of the work.

REFLECTIVE SHEETING

1. All signs shall be retroreflective and constructed of sheeting meeting the requirements of the DMS and color usage table shown on this sheet.

SIGN SUPPORT WEIGHTS

1. Weights used to keep signs from turning over should be sandbags filled with dry, cohesionless material.
2. The sandbags will be tied shut to keep the sand from spilling and to maintain a constant weight.
3. Rock, concrete, iron, steel or other solid objects will not be permitted for use as sign support weights.
4. Sandbags should weigh a minimum of 35 lbs and a maximum of 50 lbs.
5. Sandbags shall be made of a durable material that tears upon vehicular impact. Rubber, such as tire inner tubes, shall not be used.
6. Rubber ballasts designed for channelizing devices should not be used for ballast on portable sign supports. Sign supports designed and manufactured with rubber bases may be used when shown on the CWZTCD list.
7. Sandbags shall only be placed along or laid over the base supports of the traffic control device and shall not be suspended above ground level or hung with rope, wire, chains or other fastners. Sandbags shall be placed along the length of the skids to weigh down the sign support.
8. Sandbags shall NOT be placed under the skid and shall not be used to level sign supports placed on slopes.

LEGEND	
	Sign
	Channelizing Devices
	Type 3 Barricade

DEPARTMENTAL MATERIAL SPECIFICATIONS	
SIGN FACE MATERIALS	DMS-8300
FLEXIBLE ROLL-UP REFLECTIVE SIGNS	DMS-8310

COLOR	USAGE	SHEETING MATERIAL
ORANGE	BACKGROUND	TYPE B_{FL} OR TYPE C_{FL} SHEETING
WHITE	BACKGROUND	TYPE A SHEETING
BLACK	LEGEND & BORDERS	ACRYLIC NON-REFLECTIVE SHEETING

Only pre-qualified products shall be used. A copy of the "Compliant Work Zone Traffic Control Devices List" (CWZTCD) describes pre-qualified products and their sources and may be found at the following web address:
http://www.txdot.gov/txdot_library/publications/construction.htm

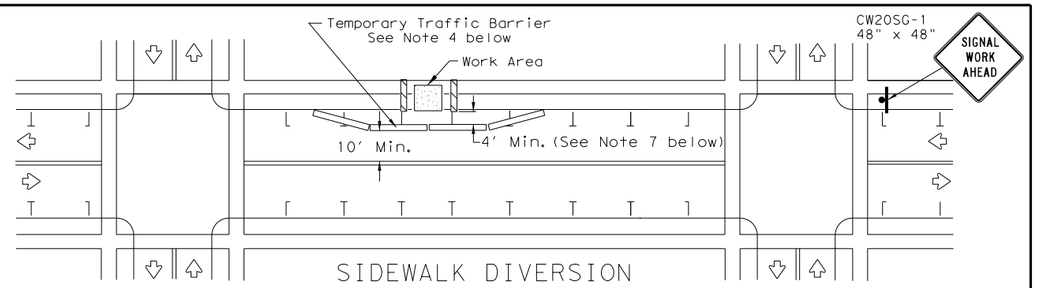

SIDEWALK DIVERSION

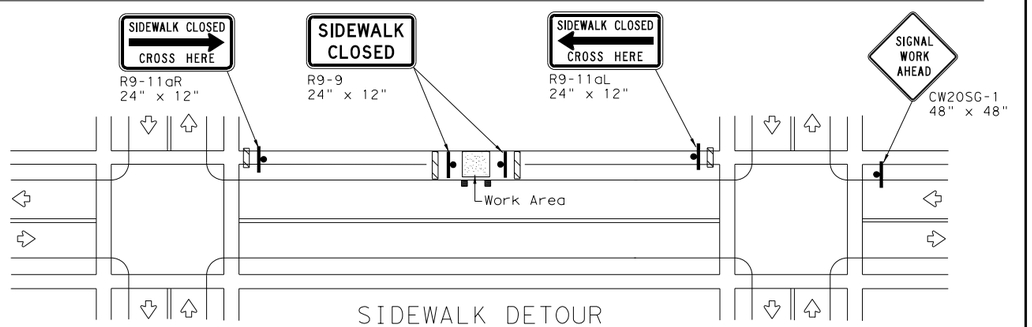

SIDEWALK DETOUR

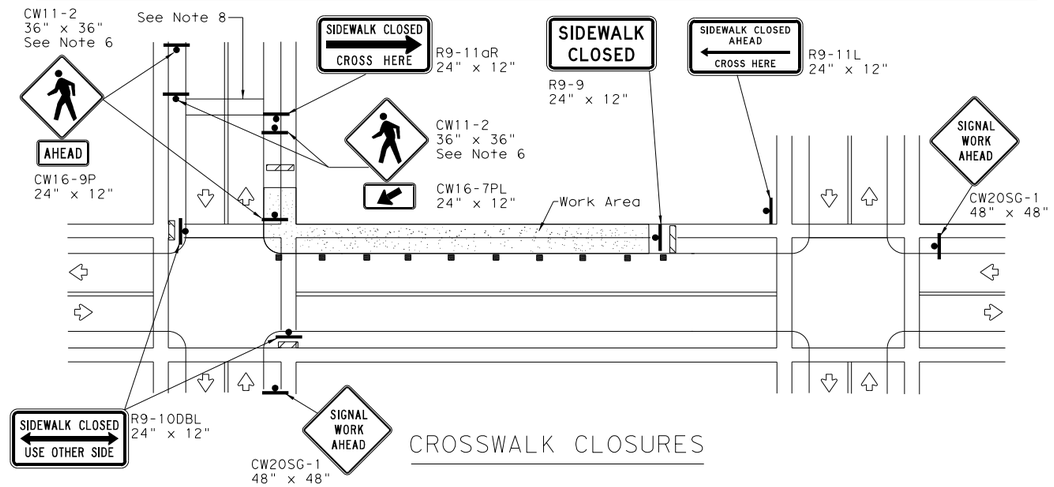

CROSSWALK CLOSURES

PEDESTRIAN CONTROL

1. Holes, trenches or other hazards shall be adequately protected by covering, delineating or surrounding the hazard with orange plastic pedestrian fencing or longitudinal channelizing devices, or as directed by the Engineer.
2. "CROSSWALK CLOSURES" as detailed above will require the Engineer's approval prior to installation.
3. R9 series signs shown may be placed on supports detailed on the BC standards or CWZTCD list, or when fabricated from approved lightweight plastic substrates, they may be mounted on top of a plastic drum at or near the location shown.
4. For speeds less than 45 mph longitudinal channelizing devices may be used instead of traffic barriers when approved by the Engineer. Attenuation of blunt ends and installation of water filled devices shall be as per BC(9) and manufacturer's recommendations.
5. Location of devices are for general guidance. Actual device spacing and location must be field adjusted to meet actual conditions.
6. Where pedestrians with visual disabilities normally use the closed sidewalk Detectable Pedestrian Barricades should be used instead of the Type 3 Barricades shown.
7. The width of existing sidewalk should be maintained if practical.
8. Pavement markings for mid-block crosswalks shall be paid for under the appropriate bid items.
9. When crosswalks or other pedestrian facilities are closed or relocated, temporary facilities shall be detectable and shall include accessibility features consistent with the features present in the existing pedestrian facility.

Texas Department of Transportation

Traffic Operations Division Standard

TRAFFIC SIGNAL WORK BARRICADES AND SIGNS

WZ(BTS-2)-13

FILE: wzbts-13.dgn	DN: TxDOT	CK: TxDOT	DW: TxDOT	CK: TxDOT
©TxDOT April 1992	CONT	SECT	JOB	HIGHWAY
REVISIONS				KLEIN RD
2-98 10-99 7-13	DIST	COUNTY		SHEET NO.
4-98 3-03	SAT	GUADALUPE		113

DATE: 1/9/2020 3:42:38 PM
FILE: H:\projects\5103003\Design\Civil\Standards\TCP\wzbts-13.dgn

Plotted on: 12/2/2019

11X17 SCALE: 1"=500'

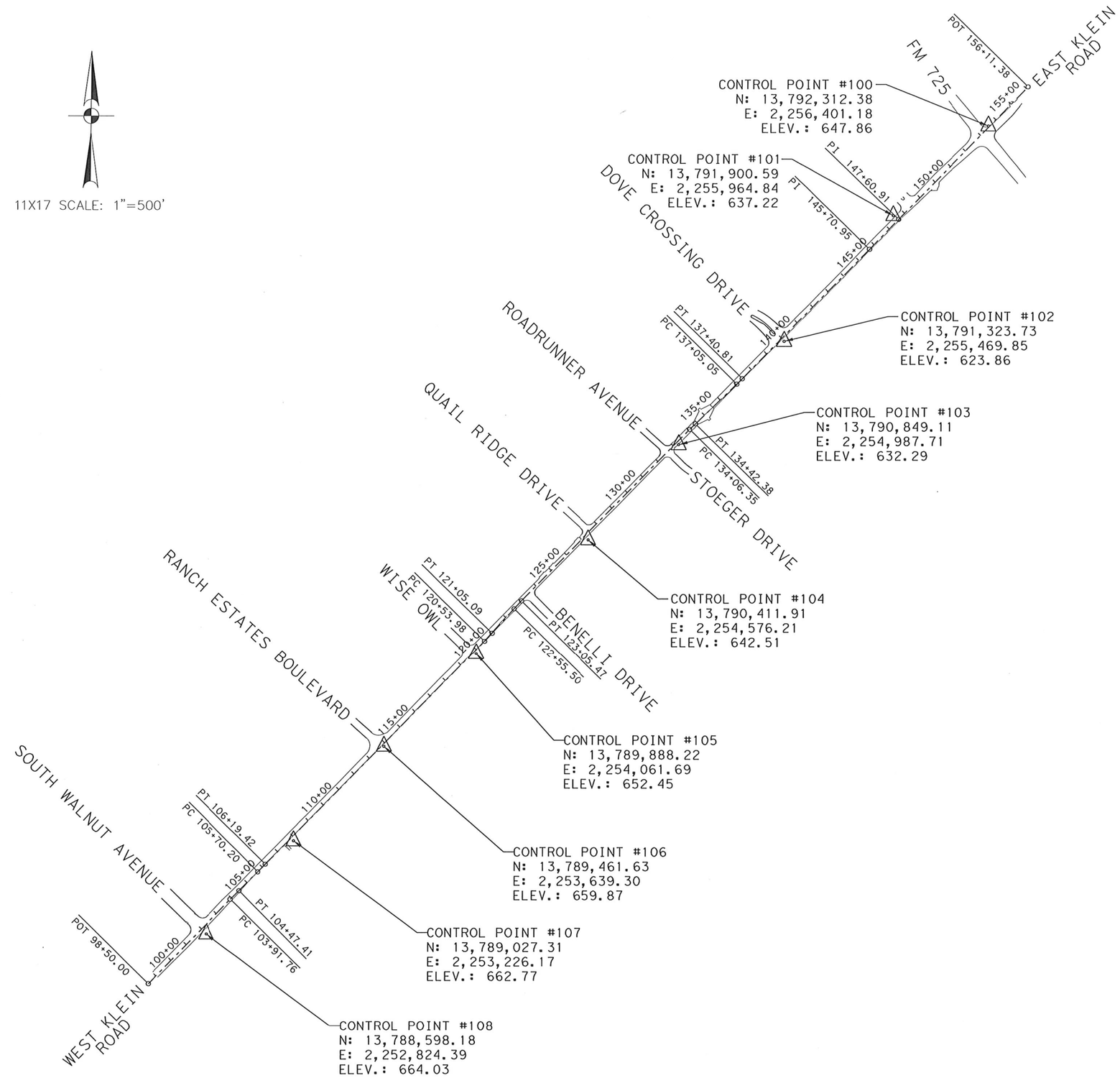

NOTES:

1. COORDINATES SHOWN ARE DISPLAYED IN US SURVEY FEET, BASED ON THE NORTH AMERICAN DATUM OF 1983 (NA 2011) EPOCH 2010 FROM THE TEXAS COORDINATE SYSTEM ESTABLISHED FOR THE SOUTH CENTRAL ZONE, WITH A SURFACE ADJUSTMENT FACTOR OF 1.00012 APPLIED.

2. SURVEY VERTICAL DATA IS BASED ON THE NORTH AMERICAN VERTICAL DATUM OF 1988 (NAVD88), GEOID 03 AND WAS DERIVED FROM SMARTNET COOPERATIVE NETWORK TOGETHER WITH CONVENTIONAL LEVELING TECHNIQUES.

3. ALIGNMENT SHOWN IS FOR DEISGN PURPOSES ONLY.

LEGEND

△ CONTROL POINT

SURVEYOR'S CERTIFICATION:

THE CONTROL POINTS SHOWN HEREIN WERE DETERMINED BY A SURVEY MADE ON THE GROUND UNDER MY SUPERVISION.

12-2-19

ERIC J. SNELL DATE
RPLS 6527

STATE OF TEXAS REGISTERED ERIC J. SNELL 6527 PROFESSIONAL LAND SURVEYOR

REV. NO.	DATE	DESCRIPTION	BY

PAPE-DAWSON ENGINEERS
SAN ANTONIO | AUSTIN | HOUSTON | FORT WORTH | DALLAS
2000 NW LOOP 410 | SAN ANTONIO, TX 78213 | 210.375.9000
TBPE FIRM REGISTRATION #470 | TBPLS FIRM REGISTRATION #10028800

City of New Braunfels

KLEIN RD PH 2

HORIZONTAL AND VERTICAL CONTROL

DGN:	JZ	STATE	PROJECT NO.	HIGHWAY NO.
CHK DGN:	ES	TEXAS	NB18-016	N/A
DWG:	JZ	COUNTY	PD JOB# 51030-03	SHEET NO.
CHK DWG:	ES	GUADALUPE		114

Design Filename: N:\Transpo\Civil\51030-03\dgn-topo\51030-03 CT LAYOUT.dgn

Plotted on: 12/2/2019

Design Filename: N:\Transpo\Civil\51030-03\dgn-topo\51030-03 CT SKETCHES*2D.dgn

CONTROL POINT 100
NORTHING: 13,792,312.38
EASTING: 2,256,401.18
ELEVATION: 647.86'
STA. 153+55.83
OFFSET 5.03' LT.

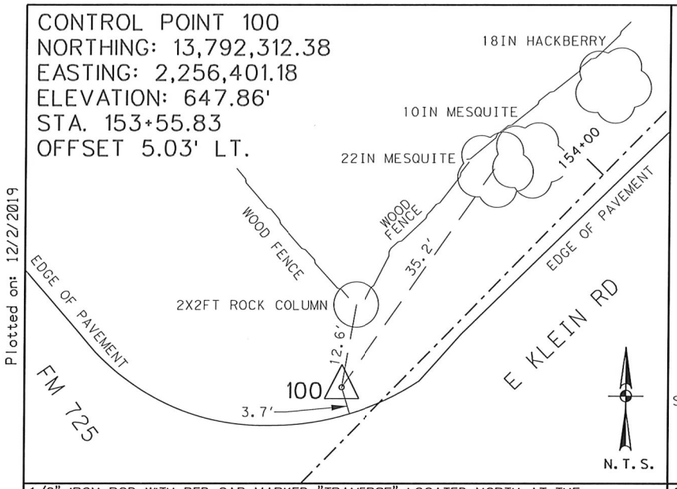

1/2" IRON ROD WITH RED CAP MARKED "TRAVERSE" LOCATED NORTH AT THE INTERSECTION OF FM 725 AND E KLEIN ROAD.

CONTROL POINT 101
NORTHING: 13,791,900.59
EASTING: 2,255,964.84
ELEVATION: 637.22'
STA. 147+56.53
OFFSET 29.93' LT.

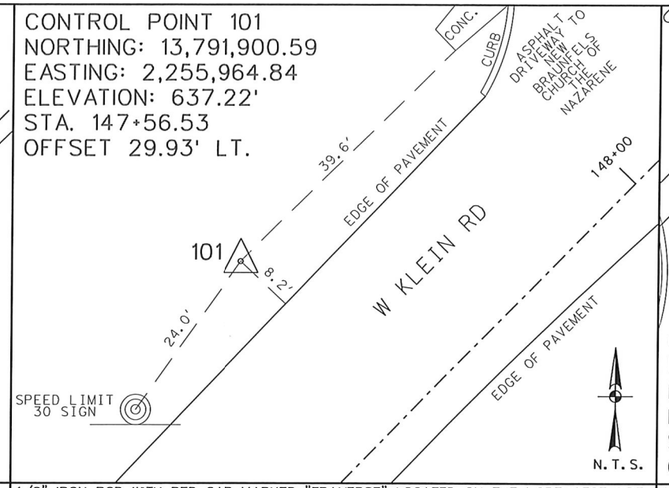

1/2" IRON ROD WITH RED CAP MARKED "TRAVERSE" LOCATED ON THE NORTHWEST SIDE OF W KLEIN RD., APPROXIMATELY 88 FEET SOUTHWEST OF THE ASPHALT DRIVEWAY TO THE NEW BRAUNFELS CHURCH OF THE NAZARENE.

CONTROL POINT 102
NORTHING: 13,791,323.73
EASTING: 2,255,469.85
ELEVATION: 623.86'
STA. 139+97.80
OFFSET 17.63' RT.

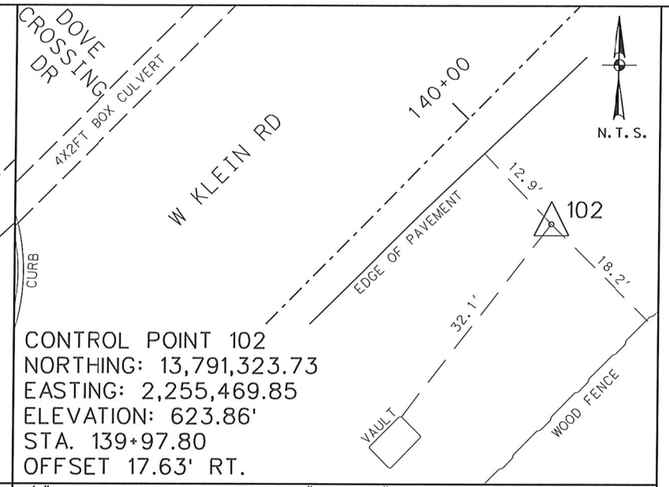

1/2" IRON ROD WITH RED CAP MARKED "TRAVERSE" LOCATED ON THE SOUTHEAST SIDE OF W KLEIN RD. AT THE INTERSECTION OF W KLEIN RD. AND DOVE CROSSING DR.

NOTES:
1. COORDINATES SHOWN ARE DISPLAYED IN US SURVEY FEET, BASED ON THE NORTH AMERICAN DATUM OF 1983 (NA 2011) EPOCH 2010 FROM THE TEXAS COORDINATE SYSTEM ESTABLISHED FOR THE SOUTH CENTRAL ZONE, WITH A SURFACE ADJUSTMENT FACTOR OF 1.00012 APPLIED.

2. SURVEY VERTICAL DATA IS BASED ON THE NORTH AMERICAN VERTICAL DATUM OF 1988 (NAVD88), GEOID 03 AND WAS DERIVED FROM SMARTNET COOPERATIVE NETWORK TOGETHER WITH CONVENTIONAL LEVELING TECHNIQUES.

3. ALIGNMENT SHOWN IS FOR DESIGN PURPOSES ONLY.

LEGEND

△	CONTROL POINT
FM	FARM TO MARKET ROAD
N.T.S.	NOT TO SCALE
STA.	STATION

SURVEYOR'S CERTIFICATION:
THE CONTROL POINTS SHOWN HEREIN WERE DETERMINED BY A SURVEY MADE ON THE GROUND UNDER MY SUPERVISION.

12-2-19
ERIC J. SNELL — DATE
RPLS 6527

STATE OF TEXAS REGISTERED ERIC J. SNELL 6527 PROFESSIONAL LAND SURVEYOR

CONTROL POINT 103
NORTHING: 13,790,849.11
EASTING: 2,254,987.71
ELEVATION: 632.29'
STA. 133+21.23
OFFSET 13.69' RT.

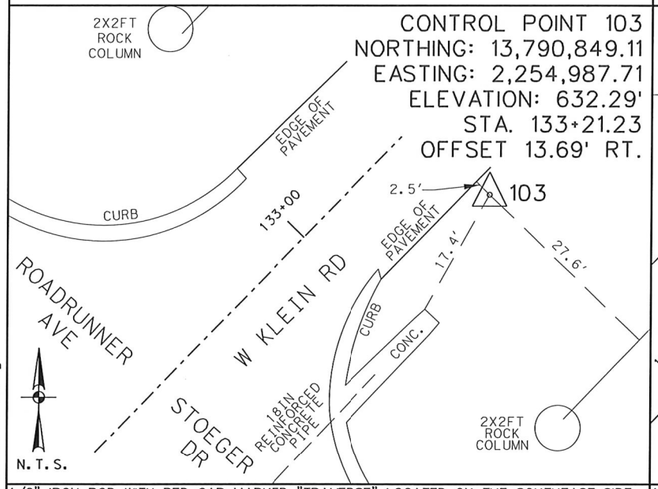

1/2" IRON ROD WITH RED CAP MARKED "TRAVERSE" LOCATED ON THE SOUTHEAST SIDE OF W KLEIN RD., APPROXIMATELY 58 FEET NORTHEAST OF THE INTERSECTION OF W KLEIN RD. AND STOEGER DR.

CONTROL POINT 104
NORTHING: 13,790,411.91
EASTING: 2,254,576.21
ELEVATION: 642.51'
STA. 127+20.93
OFFSET 24.34' RT.

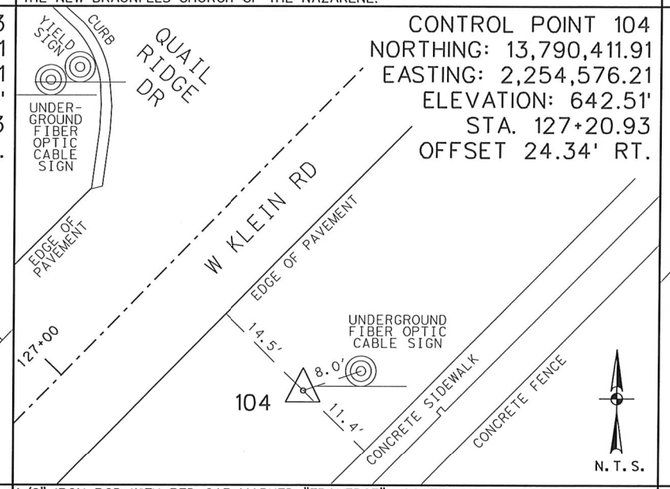

1/2" IRON ROD WITH RED CAP MARKED "TRAVERSE" LOCATED ON THE SOUTHEAST SIDE OF W KLEIN RD., APPROXIMATELY 32 FEET SOUTHWEST OF THE INTERSECTION OF W KLEIN RD. AND QUAIL RIDGE DR.

CONTROL POINT 105
NORTHING: 13,789,888.22
EASTING: 2,254,061.69
ELEVATION: 652.45'
STA. 119+86.60
OFFSET 12.60' RT.

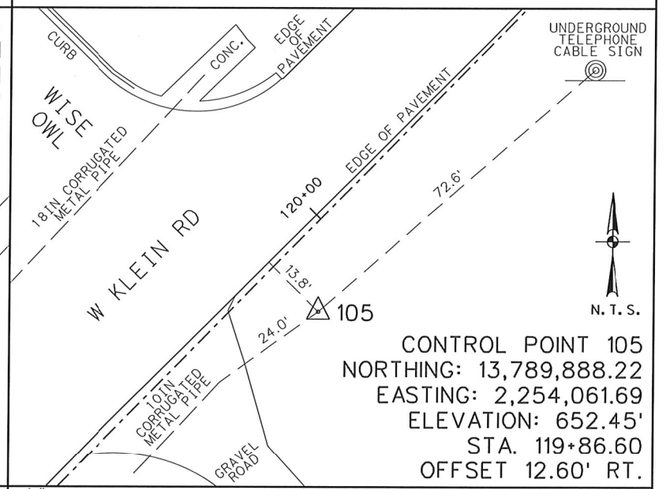

1/2" IRON ROD WITH RED CAP MARKED "TRAVERSE" LOCATED ON THE SOUTHEAST SIDE OF W KLEIN RD., APPROXIMATELY 15 FEET NORTHEAST OF THE INTERSECTION OF W KLEIN RD. AND WISE OWL.

CONTROL POINT 107
NORTHING: 13,789,027.31
EASTING: 2,253,226.17
ELEVATION: 662.77'
STA. 107+86.92
OFFSET 16.76' RT.

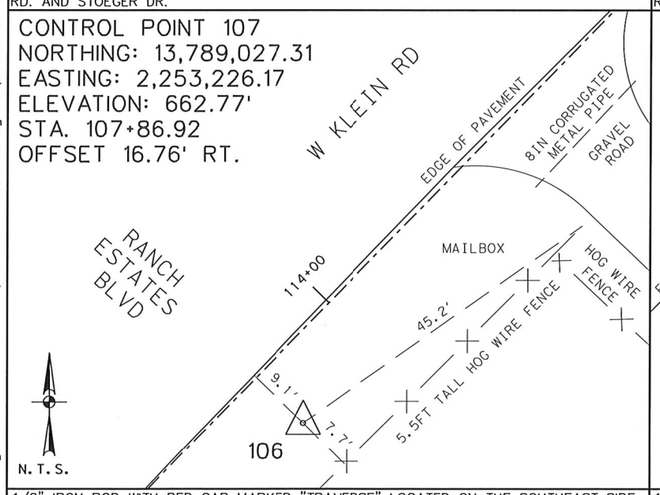

1/2" IRON ROD WITH RED CAP MARKED "TRAVERSE" LOCATED ON THE SOUTHEAST SIDE OF W KLEIN RD., APPROXIMATELY 8 FEET NORTHEAST OF THE INTERSECTION OF W KLEIN RD. AND RANCH ESTATES BLVD.

CONTROL POINT 107
NORTHING: 13,789,027.31
EASTING: 2,253,226.17
ELEVATION: 662.77'
STA. 107+86.92
OFFSET 16.76' RT.

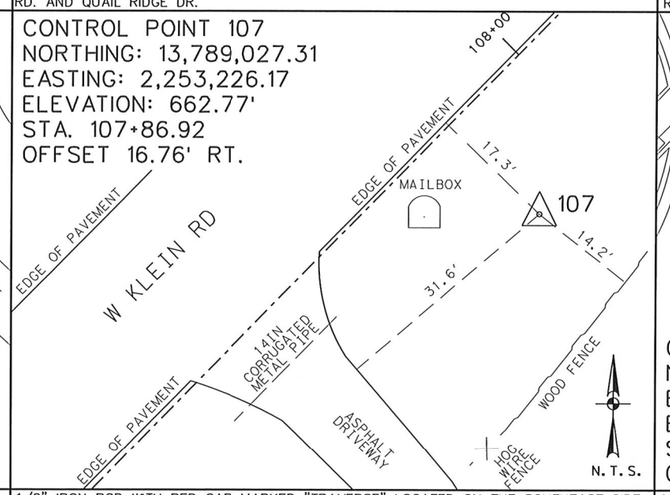

1/2" IRON ROD WITH RED CAP MARKED "TRAVERSE" LOCATED ON THE SOUTHEAST SIDE OF W KLEIN RD., APPROXIMATELY 585 FEET NORTHEAST OF THE INTERSECTION OF W KLEIN RD. AND SOUTH WALNUT AVE.

CONTROL POINT 108
NORTHING: 13,788,598.18
EASTING: 2,252,824.39
ELEVATION: 664.03'
STA. 101+99.13
OFFSET 31.14' RT.

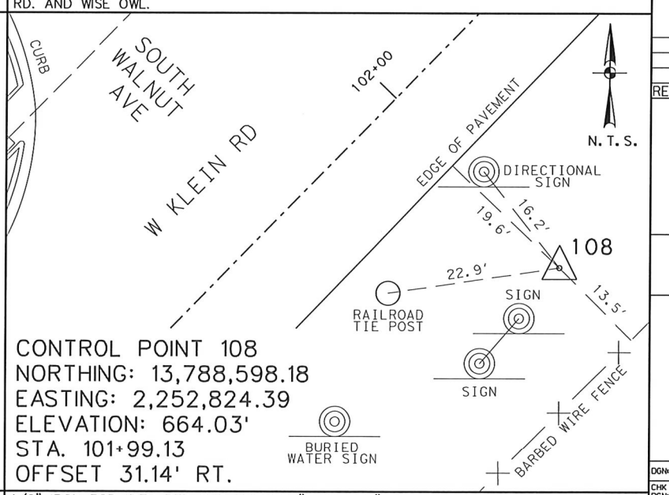

1/2" IRON ROD WITH RED CAP MARKED "TRAVERSE" LOCATED ON THE SOUTHEAST SIDE OF W KLEIN RD. AT THE INTERSECTION OF W KLEIN RD. AND S WALNUT AVE.

REV. NO.	DATE	DESCRIPTION	BY

PAPE-DAWSON ENGINEERS

SAN ANTONIO | AUSTIN | HOUSTON | FORT WORTH | DALLAS
2000 NW LOOP 410 | SAN ANTONIO, TX 78213 | 210.375.9000
TBPE FIRM REGISTRATION #470 | TBPLS FIRM REGISTRATION #10028800

City of New Braunfels

KLEIN RD PH 2

HORIZONTAL AND VERTICAL CONTROL

DSN:	JZ	STATE	PROJECT NO.	HIGHWAY NO.
CHK DSN:	ES	TEXAS	NB18-016	N/A
DWG:	JZ	COUNTY	PD JOB# 51030-03	SHEET NO.
CHK DWG:	ES	GUADALUPE		115

ALIGN KLEIN CL

Beginning chain KLEINCL description
Feature: Road Centerline

Point KLEINCL1 N 13,788,369.82 E 2,252,558.47 Sta 98+50.00

Course from KLEINCL1 to PC KLEINCL 3 N 44° 14′ 57" E Dist 541.76

Curve KLEINCL 3		Curve Data			
P.I. Station		104+19.58	N	13,788,777.82	E 2,252,955.91
Delta	=	0° 47′ 50"	(RT)		
Degree	=	1° 25′ 57"			
Tangent	=	27.82			
Length	=	55.65			
Radius	=	4,000.00			
External	=	0.10			
Long Chord	=	55.65			
Mid. Ord.	=	0.10			
P.C. Station		103+91.76	N	13,788,757.89	E 2,252,936.50
P.T. Station		104+47.41	N	13,788,797.48	E 2,252,975.60
C.C.			N	13,785,966.77	E 2,255,801.75
Back	= N 44° 14′ 57" E				
Ahead	= N 45° 02′ 47" E				
Chord Bear	= N 44° 38′ 52" E				

Course from PT KLEINCL 3 to PC KLEINCL 6 N 45° 02′ 47" E Dist 122.79

Curve KLEINCL 6		Curve Data			
P.I. Station		105+94.81	N	13,788,901.63	E 2,253,079.92
Delta	=	0° 42′ 18"	(LT)		
Degree	=	1° 25′ 57"			
Tangent	=	24.61			
Length	=	49.22			
Radius	=	4,000.00			
External	=	0.08			
Long Chord	=	49.22			
Mid. Ord.	=	0.08			
P.C. Station		105+70.20	N	13,788,884.24	E 2,253,062.50
P.T. Station		106+19.42	N	13,788,919.23	E 2,253,097.12
C.C.			N	13,791,714.95	E 2,250,236.36
Back	= N 45° 02′ 47" E				
Ahead	= N 44° 20′ 28" E				
Chord Bear	= N 44° 41′ 37" E				

Course from PT KLEINCL 6 to PC KLEINCL 9 N 44° 20′ 28" E Dist 1,434.56

Curve KLEINCL 9		Curve Data			
P.I. Station		120+79.54	N	13,789,963.49	E 2,254,117.64
Delta	=	2° 39′ 44"	(LT)		
Degree	=	5° 12′ 31"			
Tangent	=	25.56			
Length	=	51.11			
Radius	=	1,100.00			
External	=	0.30			
Long Chord	=	51.10			
Mid. Ord.	=	0.30			
P.C. Station		120+53.98	N	13,789,945.21	E 2,254,099.77
P.T. Station		121+05.09	N	13,789,982.58	E 2,254,134.63
C.C.			N	13,790,714.03	E 2,253,313.06
Back	= N 44° 20′ 28" E				
Ahead	= N 41° 40′ 45" E				
Chord Bear	= N 43° 00′ 37" E				

Course from PT KLEINCL 9 to PC KLEINCL 12 N 41° 40′ 45" E Dist 150.41

Curve KLEINCL 12		Curve Data			
P.I. Station		122+80.49	N	13,790,113.58	E 2,254,251.27
Delta	=	2° 36′ 11"	(RT)		
Degree	=	5° 12′ 31"			
Tangent	=	24.99			
Length	=	49.97			
Radius	=	1,100.00			
External	=	0.28			
Long Chord	=	49.97			
Mid. Ord.	=	0.28			
P.C. Station		122+55.50	N	13,790,094.92	E 2,254,234.65
P.T. Station		123+05.47	N	13,790,131.48	E 2,254,268.72
C.C.			N	13,789,363.47	E 2,255,056.22
Back	= N 41° 40′ 45" E				
Ahead	= N 44° 16′ 55" E				
Chord Bear	= N 42° 58′ 50" E				

Course from PT KLEINCL 12 to PC KLEINCL 15 N 44° 16′ 55" E Dist 1,100.87

Curve KLEINCL 15		Curve Data			
P.I. Station		134+24.37	N	13,790,932.50	E 2,255,049.92
Delta	=	1° 52′ 38"	(RT)		
Degree	=	5° 12′ 31"			
Tangent	=	18.02			
Length	=	36.04			
Radius	=	1,100.00			
External	=	0.15			
Long Chord	=	36.04			
Mid. Ord.	=	0.15			
P.C. Station		134+06.35	N	13,790,919.60	E 2,255,037.34
P.T. Station		134+42.38	N	13,790,944.99	E 2,255,062.92
C.C.			N	13,790,151.59	E 2,255,824.84
Back	= N 44° 16′ 55" E				
Ahead	= N 46° 09′ 33" E				
Chord Bear	= N 45° 13′ 14" E				

Course from PT KLEINCL 15 to PC KLEINCL 18 N 46° 09′ 33" E Dist 262.67

ALIGN KLEIN CL CONTINUED

Curve KLEINCL_18		Curve Data			
P.I. Station		137+22.93	N	13,791,139.31	E 2,255,265.27
Delta	=	1° 51′ 44"	(LT)		
Degree	=	5° 12′ 31"			
Tangent	=	17.88			
Length	=	35.75			
Radius	=	1,100.00			
External	=	0.15			
Long Chord	=	35.75			
Mid. Ord.	=	0.15			
P.C. Station		137+05.05	N	13,791,126.93	E 2,255,252.37
P.T. Station		137+40.81	N	13,791,152.11	E 2,255,277.75
C.C.			N	13,791,920.32	E 2,254,490.45
Back	= N 46° 09′ 33" E				
Ahead	= N 44° 17′ 49" E				
Chord Bear	= N 45° 13′ 41" E				

Course from PT KLEINCL_18 to KLEINCL21 N 44° 17′ 49" E Dist 830.15

Point KLEINCL21 N 13,791,746.27 E 2,255,857.51 Sta 145+70.95

Course from KLEINCL21 to KLEINCL23 N 43° 58′ 50" E Dist 189.95

Point KLEINCL23 N 13,791,882.95 E 2,255,989.41 Sta 147+60.91

Course from KLEINCL23 to KLEINCL24 N 44° 16′ 55" E Dist 850.48

Point KLEINCL24 N 13,792,491.82 E 2,256,583.21 Sta 156+11.38

Ending chain KLEINCL description

DESIGN

INTERIM REVIEW

DOCUMENT INCOMPLETE. NOT INTENDED FOR PERMIT, BIDDING OR CONSTRUCTION.
ENGINEER: TYLER PAYNE DUBE
P.E. SERIAL NO: 118612
DATE: 1/9/2020

APPROVAL

INTERIM REVIEW

DOCUMENT INCOMPLETE. NOT INTENDED FOR PERMIT, BIDDING OR CONSTRUCTION.
ENGINEER: JOHN A. TYLER
P.E. SERIAL NO: 105193
DATE: 1/9/2020

REV. NO.	DATE	DESCRIPTION	BY

PAPE-DAWSON ENGINEERS
SAN ANTONIO | AUSTIN | HOUSTON | FORT WORTH | DALLAS
2000 NW LOOP 410 | SAN ANTONIO, TX 78213 | 210.375.9000
TBPE FIRM REGISTRATION #470 | TBPLS FIRM REGISTRATION #10028800

City of New Braunfels

KLEIN RD PHASE 2

HORIZONTAL ALIGNMENT DATA SHEET

SHEET 1 OF 1

DGN:	STATE	PROJECT NO.	ROADWAY
CHK DGN:	TEXAS	NB 18-026	KLEIN RD
DWG:	COUNTY	CITY	SHEET NO.
CHK DWG:	GUADALUPE	NEW BRAUNFELS	116

Plotted on: 1/9/2020

Design Filename: H:\Projects\510\30\03\Design\Civil\General\5103003_HADS.dgn

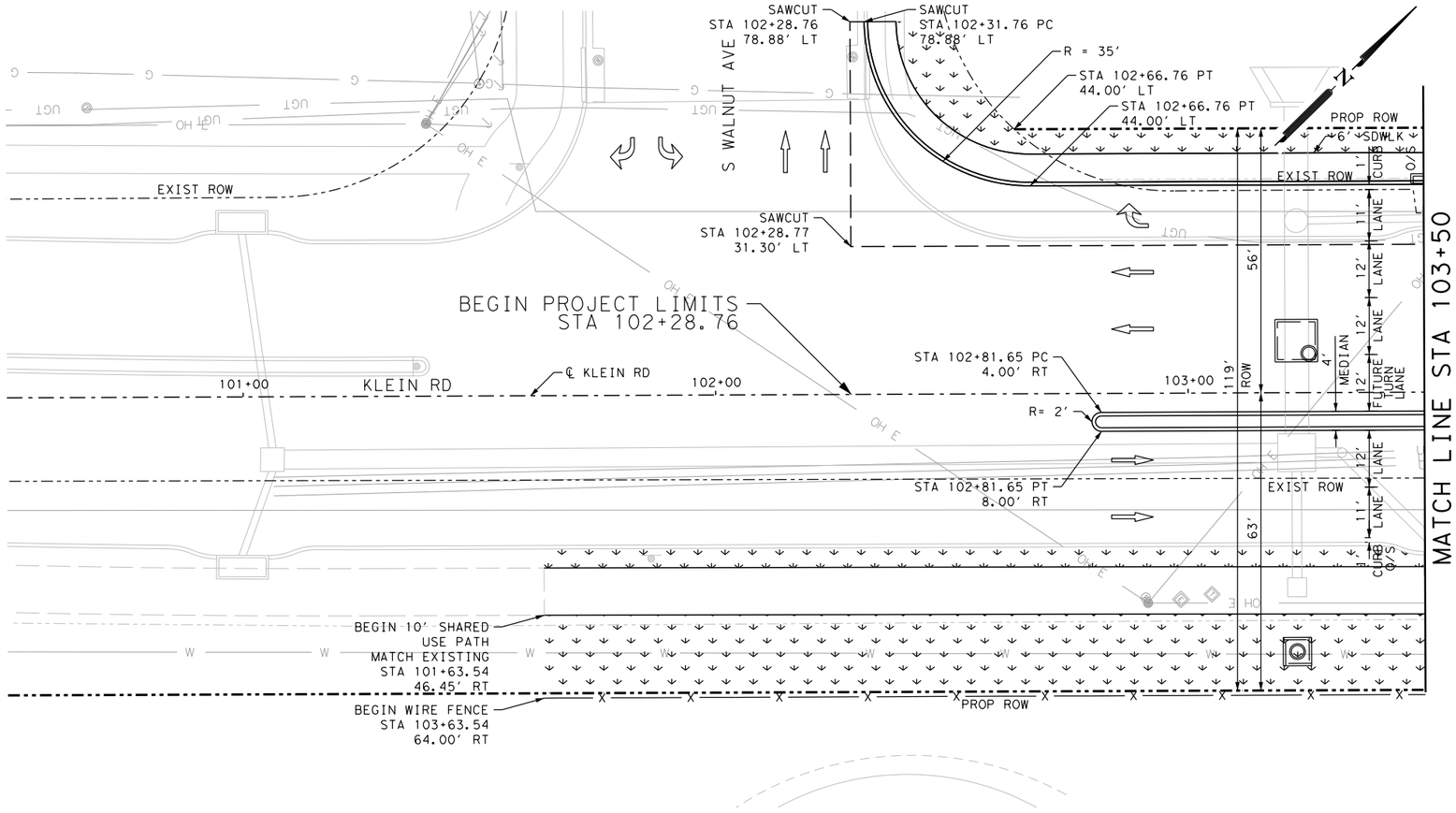

ITEM	DESCRIPTION	UNIT	QTY
500.1	Concrete Curb	LF	134
0110-6001	EXCAVATION (ROADWAY)	CY	108
0132-6005	EMBANKMENT (FINAL)(ORD COMP)(TY C)	CY	19
0160-6003	FURNISHING AND PLACING TOPSOIL (4")	SY	503
0162-6002	BLOCK SODDING	SY	503
0168-6001	VEGETATIVE WATERING	MG	7.90
0247-6041	FL BS (CMP IN PLC)(TYA GR1&2)(FNAL POS)	CY	96
0260-6001	LIME (HYDRATED LIME (DRY))	TON	3.8
0260-6011	LIME TRT (EXST MATL) (12")	SY	256
0310-6001	PRIME COAT (MULTI OPTION)	GAL	63.30
0341-6028	D-GR HMA TY-C PG70-22	TON	35.0
0341-6049	D-GR HMA TY-D PG76-22	TON	35.0
0341-6281	TACK COAT	GAL	42.20
0531-6001	CONC SIDEWALKS (4")	SY	296
0531-6006	CURB RAMPS (TY 3)	EA	1
0536-6002	CONC MEDIAN	SY	31
5001-6002	GEOGRID BASE REINFORCEMENT (TY II)	SY	256

LEGEND

CURB INLET — SWALE/GRADING — MANHOLE

BLOCK SODDING — FIELD INLET — DROP INLET

TRAFFIC FLOW ARROW — DRIVEWAY NO.

NOTES

1. SEE HORIZONTAL ALIGNMENT DATA SHEETS FOR HORIZONTAL ALIGNMENT DATA.
2. SEE INTERSECTION LAYOUT SHEETS FOR INTERSECTION DETAILS.
3. SEE PAVEMENT MARKING SHEETS FOR STRIPING AND TRAFFIC FLOW DETAILS.
4. EXISTING FEATURES ARE SHOWN SCREENED BACK; i.e. FADED.
5. ALL DIMENSIONS ARE TO EDGE OF PAVEMENT, CENTER OF MARKING OR FACE OF CURB UNLESS OTHERWISE NOTED.
6. STRIPPING OF VEGETATION FROM PROJECT SITES SHALL BE PHASED SO AS TO EXPOSE THE MINIMUM AMOUNT OF AREA TO SOIL EROSION FOR THE SHORTEST POSSIBLE PERIOD OF TIME PER THE NEW BRAUNFELS DRAINAGE AND EROSION CONTROL DESIGN MANUAL SEC.12.2(N).

DESIGN

INTERIM REVIEW

DOCUMENT INCOMPLETE. NOT INTENDED FOR PERMIT, BIDDING OR CONSTRUCTION.
ENGINEER: TYLER PAYNE DUBE
P.E. SERIAL NO: 118612
DATE: 1/9/2020

APPROVAL

INTERIM REVIEW

DOCUMENT INCOMPLETE. NOT INTENDED FOR PERMIT, BIDDING OR CONSTRUCTION.
ENGINEER: JOHN A. TYLER
P.E. SERIAL NO: 105193
DATE: 1/9/2020

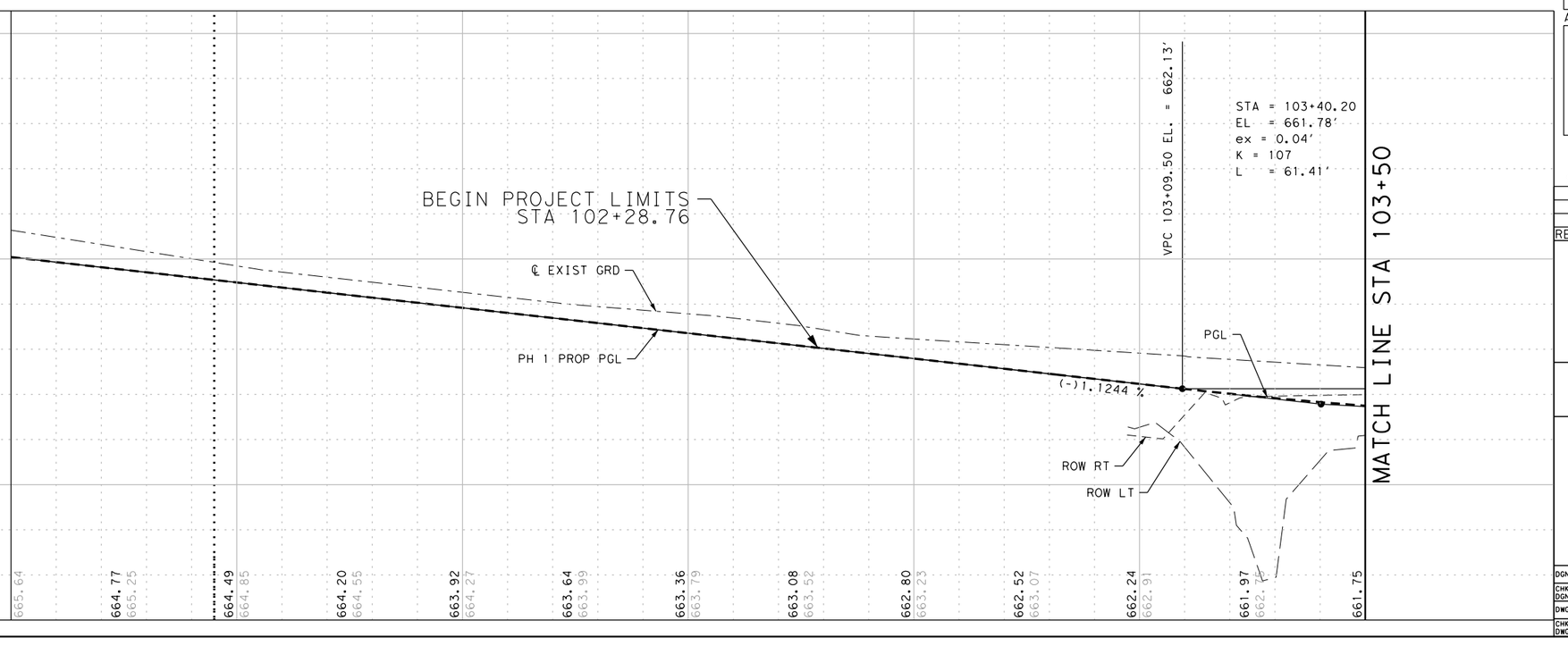

0 10 20 30 60

SCALE: PLAN 1":30' PROFILE 1":3'

REV. NO.	DATE	DESCRIPTION	BY

PAPE-DAWSON ENGINEERS

SAN ANTONIO | AUSTIN | HOUSTON | FORT WORTH | DALLAS
2000 NW LOOP 410 | SAN ANTONIO, TX 78213 | 210.375.9000
TBPE FIRM REGISTRATION #470 | TBPLS FIRM REGISTRATION #10028800

City of New Braunfels

KLEIN RD PHASE 2

ROADWAY PLAN & PROFILE

BEGIN PROJECT TO STA 103+50

SHEET 1 OF 18

DGN:	STATE	PROJECT NO.	ROADWAY
CHK DGN:	TEXAS	NB 18-026	KLEIN RD
DWG:	COUNTY	CITY	SHEET NO.
CHK DWG:	GUADALUPE	NEW BRAUNFELS	117

Plotted on: 1/9/2020

Design Filename: H:\Projects\510\30\03\Design\Civil\Roadway\5103003pp01.dgn

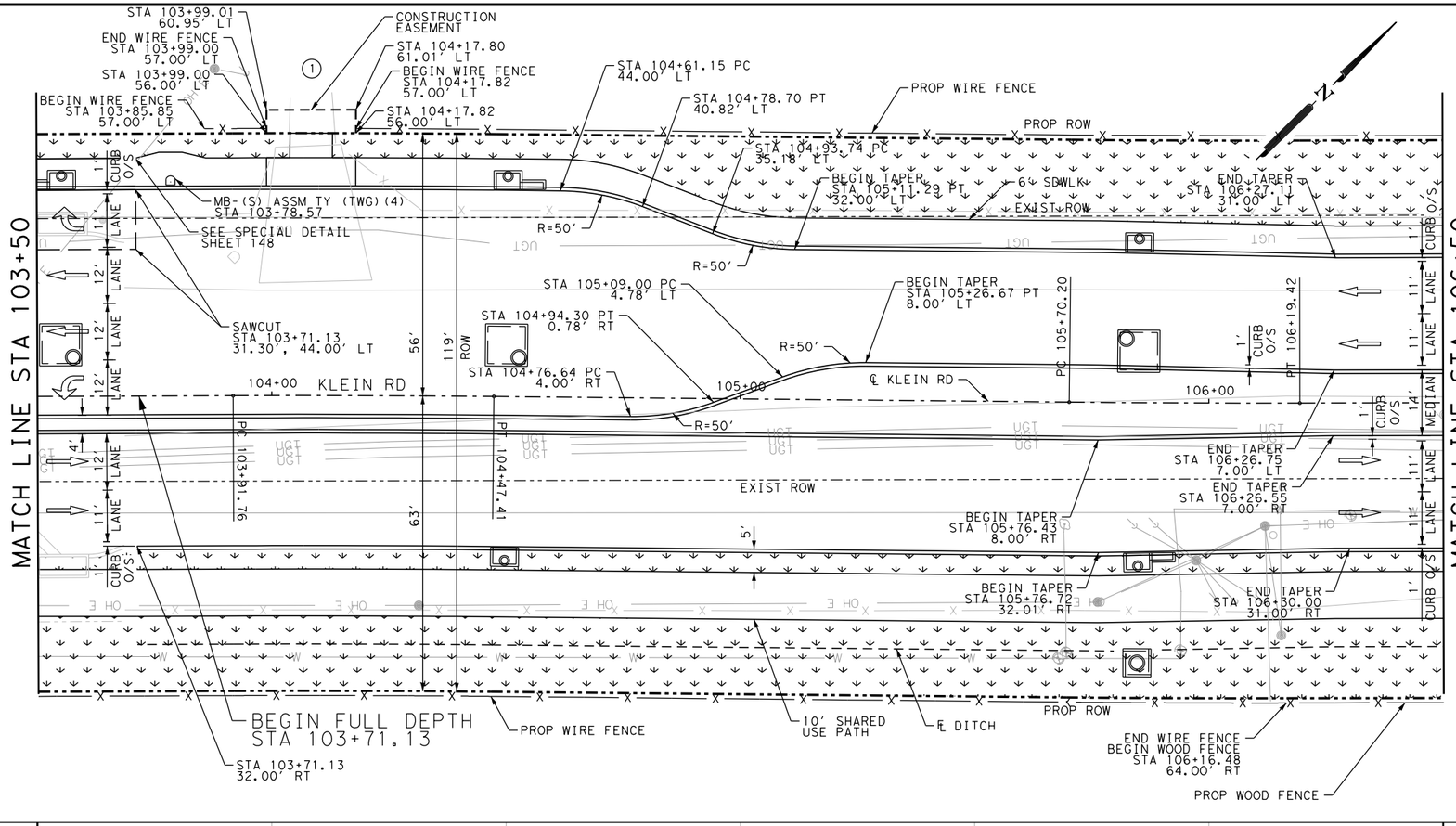

ITEM	DESCRIPTION	UNIT	QTY
500.1	Concrete Curb	LF	581
0110-6001	EXCAVATION (ROADWAY)	CY	1519
0132-6005	EMBANKMENT (FINAL)(ORD COMP)(TY C)	CY	167
0160-6003	FURNISHING AND PLACING TOPSOIL (4")	SY	1080
0162-6002	BLOCK SODDING	SY	1080
0168-6001	VEGETATIVE WATERING	MG	16.90
0247-6041	FL BS (CMP IN PLC)(TYA GR1&2)(FNAL POS)	CY	829
0260-6001	LIME (HYDRATED LIME (DRY))	TON	37.3
0260-6011	LIME TRT (EXST MATL) (12")	SY	2485
0310-6001	PRIME COAT (MULTI OPTION)	GAL	553.80
0341-6028	D-GR HMA TY-C PG70-22	TON	305.0
0341-6049	D-GR HMA TY-D PG76-22	TON	305.0
0341-6281	TACK COAT	GAL	369.20
0530-6004	DRIVEWAYS (CONC)	SY	18
0531-6001	CONC SIDEWALKS (4")	SY	524
0536-6002	CONC MEDIAN	SY	321
0560-6014	MAILBOX INSTALL-S (TWG-POST) TY 4	EA	1
5001-6002	GEOGRID BASE REINFORCEMENT (TY II)	SY	2485
6210-XXXX	PVC MOISTURE BARRIER	SY	115

LEGEND

CURB INLET
BLOCK SODDING
TRAFFIC FLOW ARROW
SWALE/GRADING
FIELD INLET
DRIVEWAY NO.
MANHOLE
DROP INLET

NOTES

1. SEE HORIZONTAL ALIGNMENT DATA SHEETS FOR HORIZONTAL ALIGNMENT DATA.
2. SEE INTERSECTION LAYOUT SHEETS FOR INTERSECTION DETAILS.
3. SEE PAVEMENT MARKING SHEETS FOR STRIPING AND TRAFFIC FLOW DETAILS.
4. EXISTING FEATURES ARE SHOWN SCREENED BACK; i.e. FADED.
5. ALL DIMENSIONS ARE TO EDGE OF PAVEMENT, CENTER OF MARKING OR FACE OF CURB UNLESS OTHERWISE NOTED.
6. STRIPPING OF VEGETATION FROM PROJECT SITES SHALL BE PHASED SO AS TO EXPOSE THE MINIMUM AMOUNT OF AREA TO SOIL EROSION FOR THE SHORTEST POSSIBLE PERIOD OF TIME PER THE NEW BRAUNFELS DRAINAGE AND EROSION CONTROL DESIGN MANUAL SEC.12.2(N).

DESIGN

INTERIM REVIEW
DOCUMENT INCOMPLETE. NOT INTENDED FOR PERMIT, BIDDING OR CONSTRUCTION.
ENGINEER: TYLER PAYNE DUBE
P.E. SERIAL NO: 118612
DATE: 1/9/2020

APPROVAL

INTERIM REVIEW
DOCUMENT INCOMPLETE. NOT INTENDED FOR PERMIT, BIDDING OR CONSTRUCTION.
ENGINEER: JOHN A. TYLER
P.E. SERIAL NO: 105193
DATE: 1/9/2020

0 10 20 30 60

SCALE: PLAN 1":30' PROFILE 1":3'

REV. NO.	DATE	DESCRIPTION	BY

PAPE-DAWSON ENGINEERS
SAN ANTONIO | AUSTIN | HOUSTON | FORT WORTH | DALLAS
2000 NW LOOP 410 | SAN ANTONIO, TX 78213 | 210.375.9000
TBPE FIRM REGISTRATION #470 | TBPLS FIRM REGISTRATION #10028800

City of New Braunfels

KLEIN RD PHASE 2

ROADWAY PLAN & PROFILE

STA 103+50 TO STA 106+50

SHEET 2 OF 18

DGN:	STATE	PROJECT NO.	ROADWAY
CHK DGN:	TEXAS	NB 18-026	KLEIN RD
DWG:	COUNTY	CITY	SHEET NO.
CHK DWG:	GUADALUPE	NEW BRAUNFELS	118

Plotted on: 1/9/2020

Design Filename: H:\Projects\510\30\03\Design\Civil\Roadway\5103003pp02.dgn

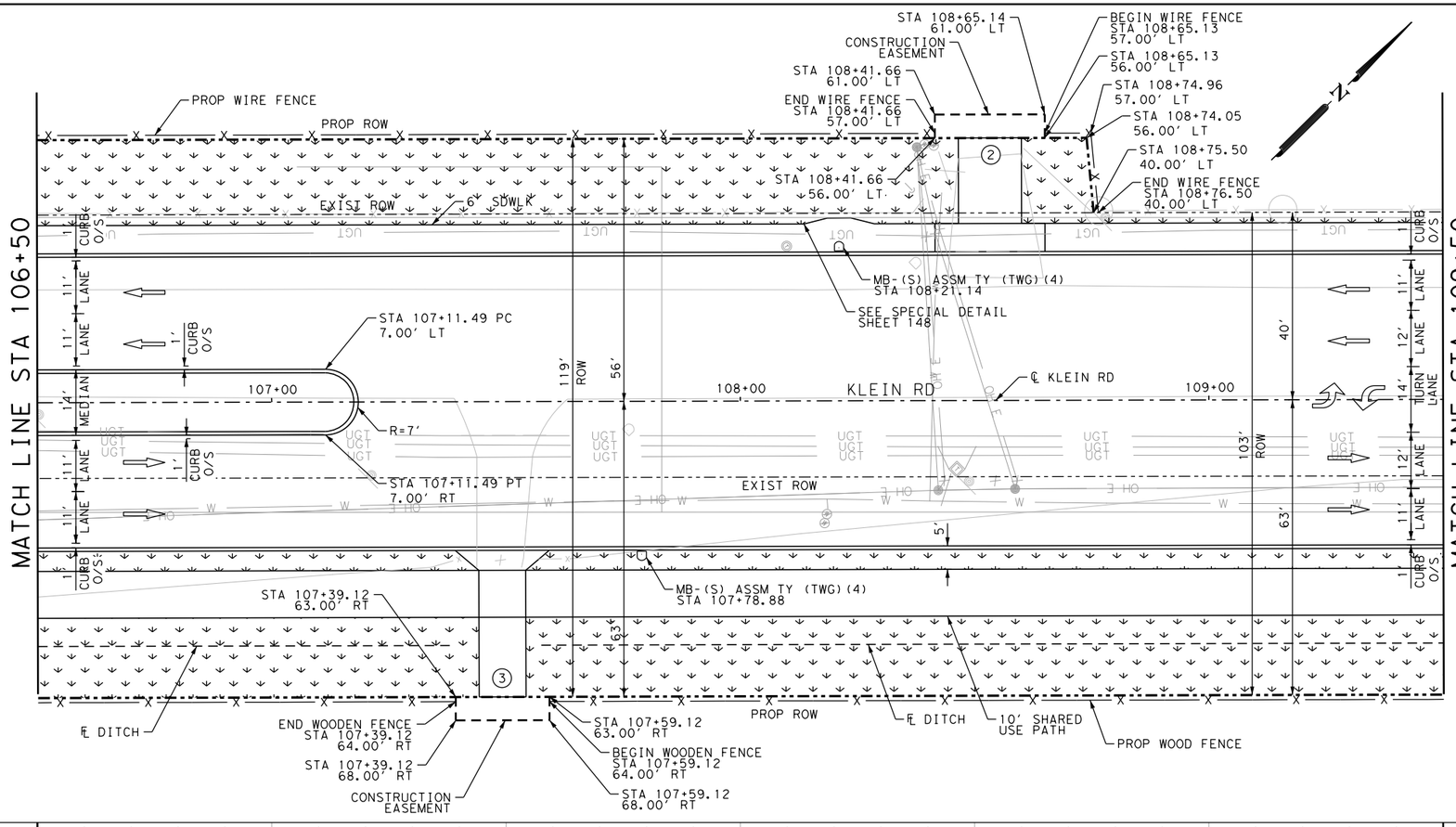

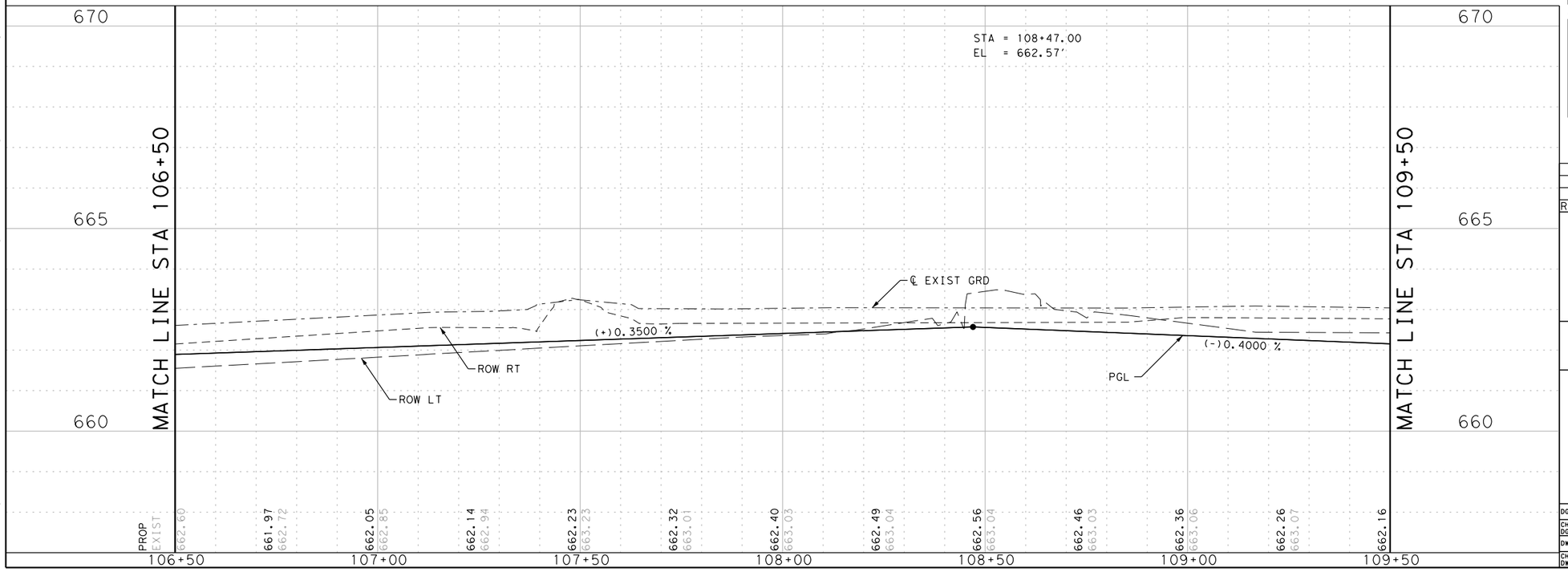

ITEM	DESCRIPTION	UNIT	QTY
500.1	Concrete Curb	LF	600
0110-6001	EXCAVATION (ROADWAY)	CY	1797
0132-6005	EMBANKMENT (FINAL)(ORD COMP)(TY C)	CY	4
0160-6003	FURNISHING AND PLACING TOPSOIL (4")	SY	1183
0162-6002	BLOCK SODDING	SY	1183
0168-6001	VEGETATIVE WATERING	MG	18.50
0247-6041	FL BS (CMP IN PLC)(TYA GR1&2)(FNAL POS)	CY	838
0260-6001	LIME (HYDRATED LIME (DRY))	TON	33.1
0260-6011	LIME TRT (EXST MATL) (12")	SY	2203
0310-6001	PRIME COAT (MULTI OPTION)	GAL	588.90
0341-6028	D-GR HMA TY-C PG70-22	TON	324.0
0341-6049	D-GR HMA TY-D PG76-22	TON	324.0
0341-6281	TACK COAT	GAL	392.60
0530-6004	DRIVEWAYS (CONC)	SY	80
0531-6001	CONC SIDEWALKS (4")	SY	520
0536-6002	CONC MEDIAN	SY	105
0560-6014	MAILBOX INSTALL-S (TWG-POST) TY 4	EA	2
5001-6002	GEOGRID BASE REINFORCEMENT (TY II)	SY	2203
6210-XXXX	PVC MOISTURE BARRIER	SY	124

LEGEND

CURB INLET — SWALE/GRADING — MANHOLE
BLOCK SODDING — FIELD INLET — DROP INLET
TRAFFIC FLOW ARROW — DRIVEWAY NO.

NOTES

1. SEE HORIZONTAL ALIGNMENT DATA SHEETS FOR HORIZONTAL ALIGNMENT DATA.
2. SEE INTERSECTION LAYOUT SHEETS FOR INTERSECTION DETAILS.
3. SEE PAVEMENT MARKING SHEETS FOR STRIPING AND TRAFFIC FLOW DETAILS.
4. EXISTING FEATURES ARE SHOWN SCREENED BACK; i.e. FADED.
5. ALL DIMENSIONS ARE TO EDGE OF PAVEMENT, CENTER OF MARKING OR FACE OF CURB UNLESS OTHERWISE NOTED.
6. STRIPPING OF VEGETATION FROM PROJECT SITES SHALL BE PHASED SO AS TO EXPOSE THE MINIMUM AMOUNT OF AREA TO SOIL EROSION FOR THE SHORTEST POSSIBLE PERIOD OF TIME PER THE NEW BRAUNFELS DRAINAGE AND EROSION CONTROL DESIGN MANUAL SEC.12.2(N).

DESIGN

INTERIM REVIEW
DOCUMENT INCOMPLETE. NOT INTENDED FOR PERMIT, BIDDING OR CONSTRUCTION.
ENGINEER: TYLER PAYNE DUBE
P.E. SERIAL NO: 118612
DATE: 1/9/2020

APPROVAL

INTERIM REVIEW
DOCUMENT INCOMPLETE. NOT INTENDED FOR PERMIT, BIDDING OR CONSTRUCTION.
ENGINEER: JOHN A. TYLER
P.E. SERIAL NO: 105193
DATE: 1/9/2020

0 10 20 30 60

SCALE: PLAN 1":30' PROFILE 1":3'

REV. NO.	DATE	DESCRIPTION	BY

PAPE-DAWSON ENGINEERS
SAN ANTONIO | AUSTIN | HOUSTON | FORT WORTH | DALLAS
2000 NW LOOP 410 | SAN ANTONIO, TX 78213 | 210.375.9000
TBPE FIRM REGISTRATION #470 | TBPLS FIRM REGISTRATION #10028800

City of New Braunfels

KLEIN RD PHASE 2

ROADWAY PLAN & PROFILE

STA 106+50 TO STA 109+50

SHEET 3 OF 18

DGN:	STATE	PROJECT NO.	ROADWAY
CHK DGN:	TEXAS	NB 18-026	KLEIN RD
DWG:	COUNTY	CITY	SHEET NO.
CHK DWG:	GUADALUPE	NEW BRAUNFELS	119

Plotted on: 1/9/2020

Design Filename: H:\Projects\510\30\03\Design\Civil\Roadway\5103003pp03.dgn

Plotted on: 1/9/2020

ITEM	DESCRIPTION	UNIT	QTY
500.1	Concrete Curb	LF	600
0110-6001	EXCAVATION (ROADWAY)	CY	2192
0160-6003	FURNISHING AND PLACING TOPSOIL (4")	SY	783
0162-6002	BLOCK SODDING	SY	783
0168-6001	VEGETATIVE WATERING	MG	12.30
0247-6041	FL BS (CMP IN PLC)(TYA GR1&2)(FNAL POS)	CY	864
0260-6001	LIME (HYDRATED LIME (DRY))	TON	33.9
0260-6011	LIME TRT (EXST MATL) (12")	SY	2262
0310-6001	PRIME COAT (MULTI OPTION)	GAL	620.10
0341-6028	D-GR HMA TY-C PG70-22	TON	341.0
0341-6049	D-GR HMA TY-D PG76-22	TON	341.0
0341-6281	TACK COAT	GAL	413.40
0530-6004	DRIVEWAYS (CONC)	SY	41
0531-6001	CONC SIDEWALKS (4")	SY	534
0560-6014	MAILBOX INSTALL-S (TWG-POST) TY 4	EA	1
5001-6002	GEOGRID BASE REINFORCEMENT (TY II)	SY	2262
6210-XXXX	PVC MOISTURE BARRIER	SY	124

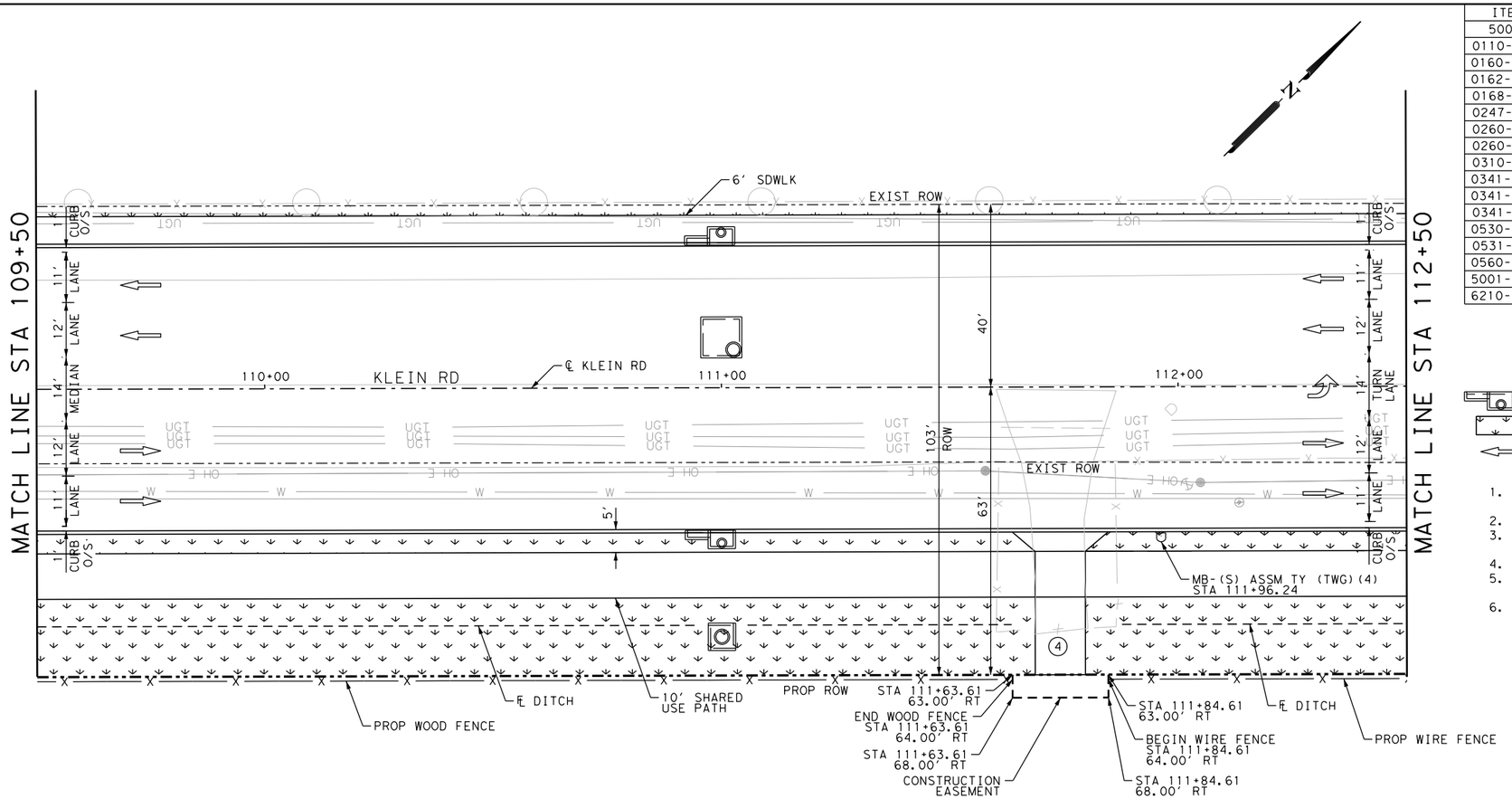

LEGEND

CURB INLET — SWALE/GRADING — MANHOLE
BLOCK SODDING — FIELD INLET — DROP INLET
TRAFFIC FLOW ARROW — DRIVEWAY NO.

NOTES

1. SEE HORIZONTAL ALIGNMENT DATA SHEETS FOR HORIZONTAL ALIGNMENT DATA.
2. SEE INTERSECTION LAYOUT SHEETS FOR INTERSECTION DETAILS.
3. SEE PAVEMENT MARKING SHEETS FOR STRIPING AND TRAFFIC FLOW DETAILS.
4. EXISTING FEATURES ARE SHOWN SCREENED BACK; i.e. FADED.
5. ALL DIMENSIONS ARE TO EDGE OF PAVEMENT, CENTER OF MARKING OR FACE OF CURB UNLESS OTHERWISE NOTED.
6. STRIPPING OF VEGETATION FROM PROJECT SITES SHALL BE PHASED SO AS TO EXPOSE THE MINIMUM AMOUNT OF AREA TO SOIL EROSION FOR THE SHORTEST POSSIBLE PERIOD OF TIME PER THE NEW BRAUNFELS DRAINAGE AND EROSION CONTROL DESIGN MANUAL SEC.12.2(N).

DESIGN

INTERIM REVIEW
DOCUMENT INCOMPLETE. NOT INTENDED FOR PERMIT, BIDDING OR CONSTRUCTION.
ENGINEER: TYLER PAYNE DUBE
P.E. SERIAL NO: 118612
DATE: 1/9/2020

APPROVAL

INTERIM REVIEW
DOCUMENT INCOMPLETE. NOT INTENDED FOR PERMIT, BIDDING OR CONSTRUCTION.
ENGINEER: JOHN A. TYLER
P.E. SERIAL NO: 105193
DATE: 1/9/2020

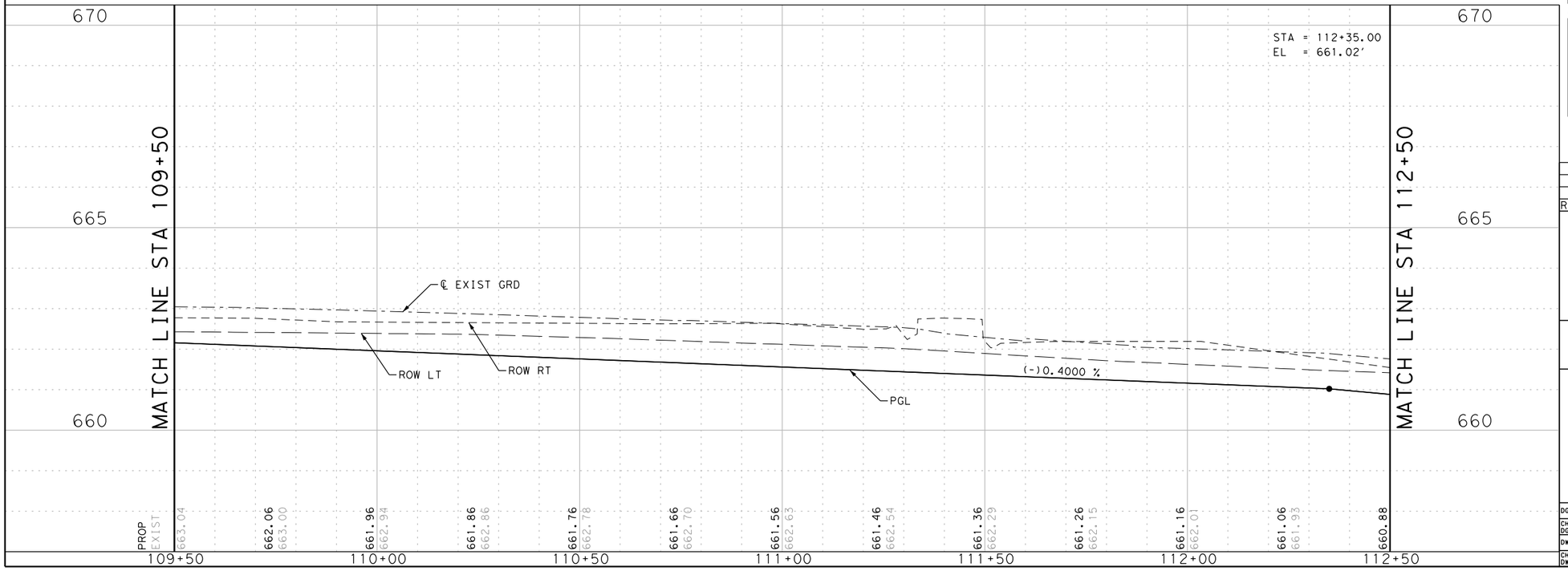

0 10 20 30 60

SCALE: PLAN 1":30' PROFILE 1":3'

REV. NO.	DATE	DESCRIPTION	BY

PAPE-DAWSON ENGINEERS
SAN ANTONIO | AUSTIN | HOUSTON | FORT WORTH | DALLAS
2000 NW LOOP 410 | SAN ANTONIO, TX 78213 | 210.375.9000
TBPE FIRM REGISTRATION #470 | TBPLS FIRM REGISTRATION #10028800

City of New Braunfels

KLEIN RD PHASE 2

ROADWAY PLAN & PROFILE

STA 109+50 TO STA 112+50

SHEET 4 OF 18

DGN:	STATE	PROJECT NO.	ROADWAY
CHK DGN:	TEXAS	NB 18-026	KLEIN RD
DWG:	COUNTY	CITY	SHEET NO.
CHK DWG:	GUADALUPE	NEW BRAUNFELS	120

Design Filename: H:\Projects\510\30\03\Design\Civil\Roadway\5103003pp04.dgn

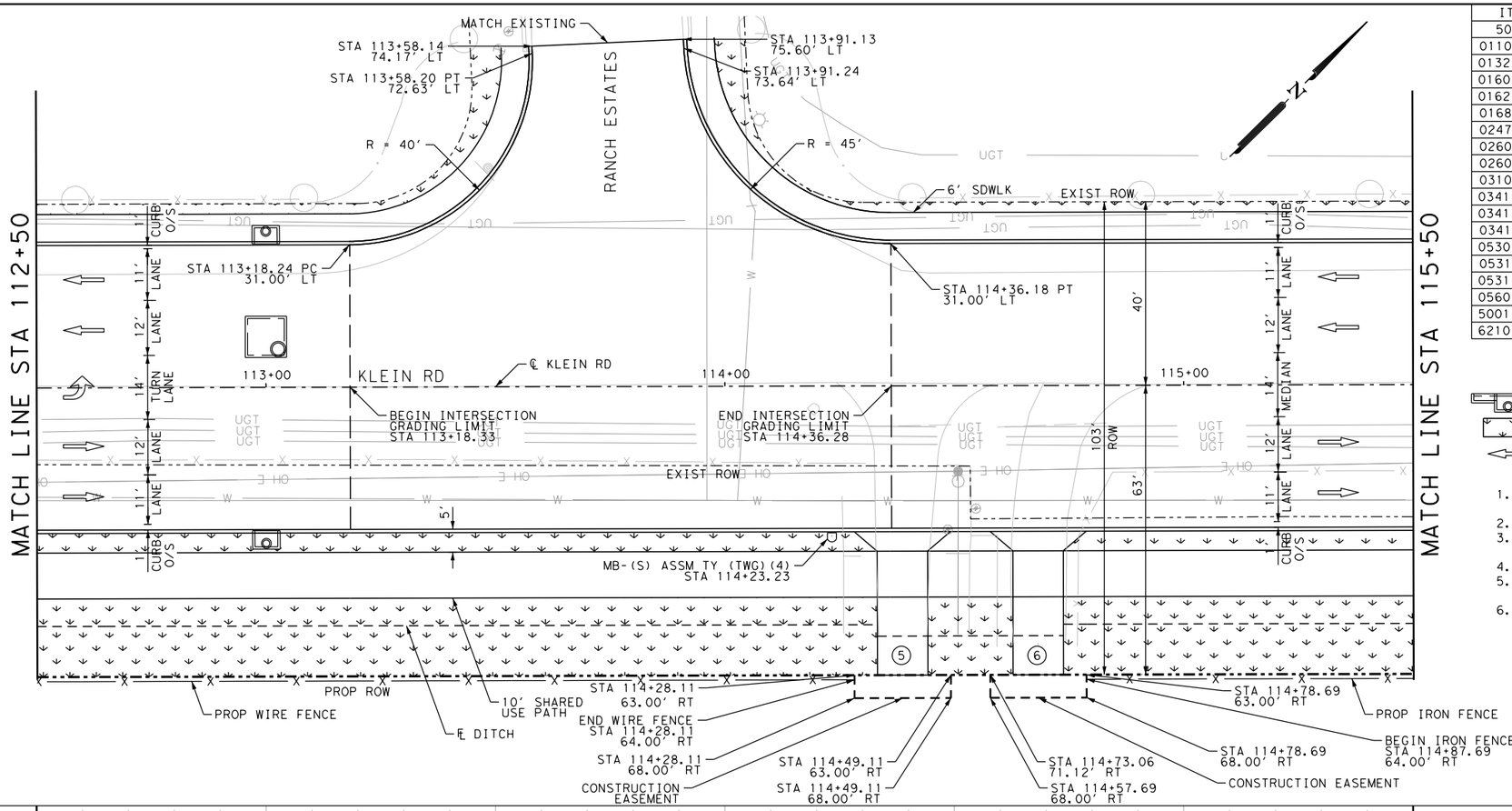

ITEM	DESCRIPTION	UNIT	QTY
500.1	Concrete Curb	LF	619
0110-6001	EXCAVATION (ROADWAY)	CY	2109
0132-6005	EMBANKMENT (FINAL)(ORD COMP)(TY C)	CY	37
0160-6003	FURNISHING AND PLACING TOPSOIL (4")	SY	793
0162-6002	BLOCK SODDING	SY	793
0168-6001	VEGETATIVE WATERING	MG	12.40
0247-6041	FL BS (CMP IN PLC)(TYA GR1&2)(FNAL POS)	CY	959
0260-6001	LIME (HYDRATED LIME (DRY))	TON	37.6
0260-6011	LIME TRT (EXST MATL) (12")	SY	2505
0310-6001	PRIME COAT (MULTI OPTION)	GAL	694.50
0341-6028	D-GR HMA TY-C PG70-22	TON	382.0
0341-6049	D-GR HMA TY-D PG76-22	TON	382.0
0341-6281	TACK COAT	GAL	463.00
0530-6004	DRIVEWAYS (CONC)	SY	82
0531-6001	CONC SIDEWALKS (4")	SY	539
0531-6005	CURB RAMPS (TY 2)	EA	2
0560-6014	MAILBOX INSTALL-S (TWG-POST) TY 4	EA	1
5001-6002	GEOGRID BASE REINFORCEMENT (TY II)	SY	2505
6210-XXXX	PVC MOISTURE BARRIER	SY	124

LEGEND

CURB INLET
BLOCK SODDING
TRAFFIC FLOW ARROW
SWALE/GRADING
FIELD INLET
DRIVEWAY NO.
MANHOLE
DROP INLET

NOTES

1. SEE HORIZONTAL ALIGNMENT DATA SHEETS FOR HORIZONTAL ALIGNMENT DATA.
2. SEE INTERSECTION LAYOUT SHEETS FOR INTERSECTION DETAILS.
3. SEE PAVEMENT MARKING SHEETS FOR STRIPING AND TRAFFIC FLOW DETAILS.
4. EXISTING FEATURES ARE SHOWN SCREENED BACK; i.e. FADED.
5. ALL DIMENSIONS ARE TO EDGE OF PAVEMENT, CENTER OF MARKING OR FACE OF CURB UNLESS OTHERWISE NOTED.
6. STRIPPING OF VEGETATION FROM PROJECT SITES SHALL BE PHASED SO AS TO EXPOSE THE MINIMUM AMOUNT OF AREA TO SOIL EROSION FOR THE SHORTEST POSSIBLE PERIOD OF TIME PER THE NEW BRAUNFELS DRAINAGE AND EROSION CONTROL DESIGN MANUAL SEC.12.2(N).

DESIGN

INTERIM REVIEW
DOCUMENT INCOMPLETE. NOT INTENDED FOR PERMIT, BIDDING OR CONSTRUCTION.
ENGINEER: TYLER PAYNE DUBE
P.E. SERIAL NO: 118612
DATE: 1/9/2020

APPROVAL

INTERIM REVIEW
DOCUMENT INCOMPLETE. NOT INTENDED FOR PERMIT, BIDDING OR CONSTRUCTION.
ENGINEER: JOHN A. TYLER
P.E. SERIAL NO: 105193
DATE: 1/9/2020

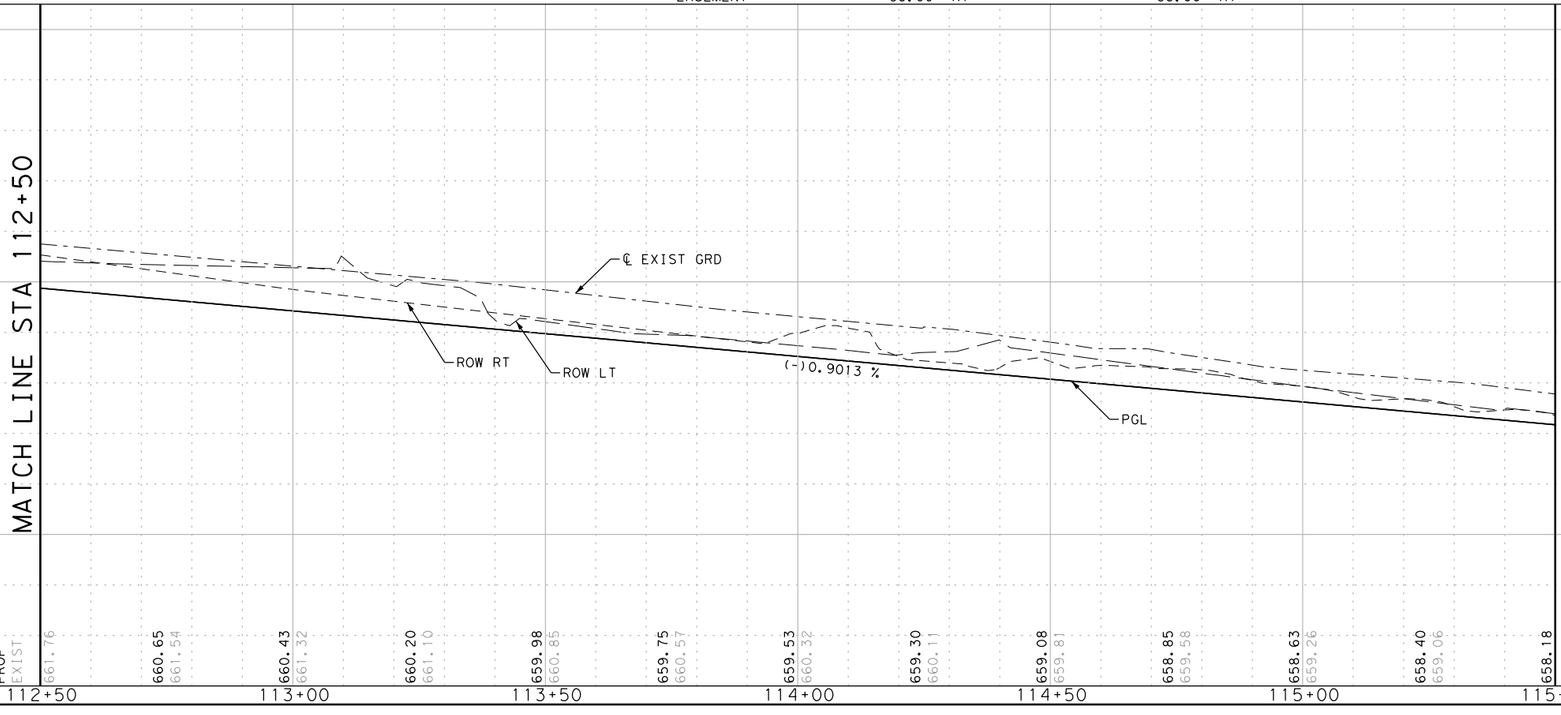

0 10 20 30 60

SCALE: PLAN 1":30' PROFILE 1":3'

REV. NO.	DATE	DESCRIPTION	BY

PAPE-DAWSON ENGINEERS
SAN ANTONIO | AUSTIN | HOUSTON | FORT WORTH | DALLAS
2000 NW LOOP 410 | SAN ANTONIO, TX 78213 | 210.375.9000
TBPE FIRM REGISTRATION #470 | TBPLS FIRM REGISTRATION #10028800

City of New Braunfels

KLEIN RD PHASE 2

ROADWAY PLAN & PROFILE

STA 112+50 TO STA 115+50

SHEET 5 OF 18

DGN:	STATE	PROJECT NO.	ROADWAY
CHK DGN:	TEXAS	NB 18-026	KLEIN RD
DWG:	COUNTY	CITY	SHEET NO.
CHK DWG:	GUADALUPE	NEW BRAUNFELS	121

Plotted on: 1/9/2020

Design Filename: H:\Projects\510\30\03\Design\Civil\Roadway\5103003pp05.dgn

Plotted on: 1/9/2020

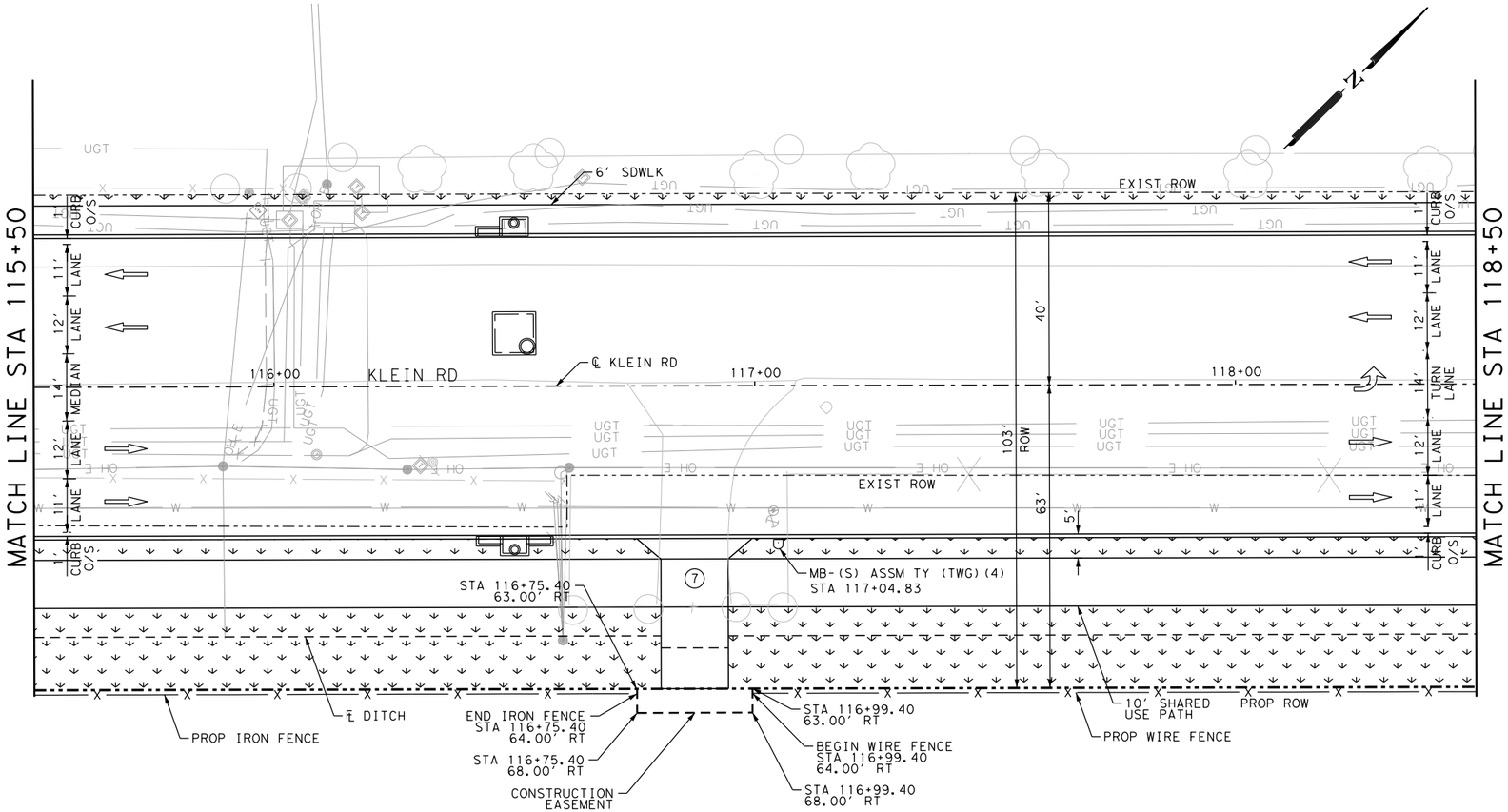

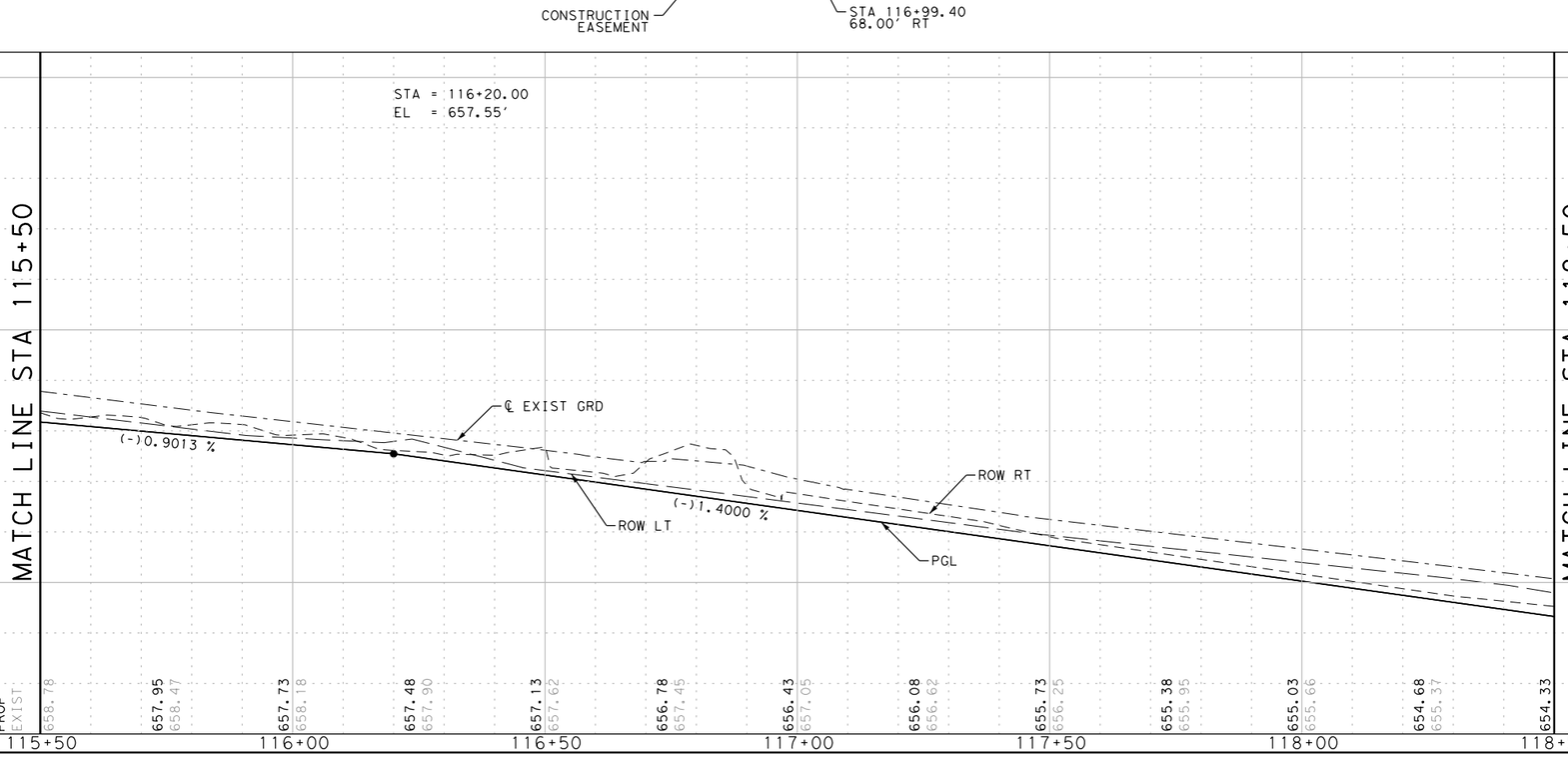

ITEM	DESCRIPTION	UNIT	QTY
500.1	Concrete Curb	LF	619
0110-6001	EXCAVATION (ROADWAY)	CY	2109
0132-6005	EMBANKMENT (FINAL)(ORD COMP)(TY C)	CY	37
0160-6003	FURNISHING AND PLACING TOPSOIL (4")	SY	793
0162-6002	BLOCK SODDING	SY	793
0168-6001	VEGETATIVE WATERING	MG	12.40
0247-6041	FL BS (CMP IN PLC)(TYA GR1&2)(FNAL POS)	CY	959
0260-6001	LIME (HYDRATED LIME (DRY))	TON	37.6
0260-6011	LIME TRT (EXST MATL) (12")	SY	2505
0310-6001	PRIME COAT (MULTI OPTION)	GAL	694.50
0341-6028	D-GR HMA TY-C PG70-22	TON	382.0
0341-6049	D-GR HMA TY-D PG76-22	TON	382.0
0341-6281	TACK COAT	GAL	463.00
0530-6004	DRIVEWAYS (CONC)	SY	82
0531-6001	CONC SIDEWALKS (4")	SY	539
0531-6005	CURB RAMPS (TY 2)	EA	2
0560-6014	MAILBOX INSTALL-S (TWG-POST) TY 4	EA	1
5001-6002	GEOGRID BASE REINFORCEMENT (TY II)	SY	2505
6210-XXXX	PVC MOISTURE BARRIER	SY	124

LEGEND

CURB INLET
BLOCK SODDING
TRAFFIC FLOW ARROW
SWALE/GRADING
FIELD INLET
DRIVEWAY NO.
MANHOLE
DROP INLET

NOTES

1. SEE HORIZONTAL ALIGNMENT DATA SHEETS FOR HORIZONTAL ALIGNMENT DATA.
2. SEE INTERSECTION LAYOUT SHEETS FOR INTERSECTION DETAILS.
3. SEE PAVEMENT MARKING SHEETS FOR STRIPING AND TRAFFIC FLOW DETAILS.
4. EXISTING FEATURES ARE SHOWN SCREENED BACK; i.e. FADED.
5. ALL DIMENSIONS ARE TO EDGE OF PAVEMENT, CENTER OF MARKING OR FACE OF CURB UNLESS OTHERWISE NOTED.
6. STRIPPING OF VEGETATION FROM PROJECT SITES SHALL BE PHASED SO AS TO EXPOSE THE MINIMUM AMOUNT OF AREA TO SOIL EROSION FOR THE SHORTEST POSSIBLE PERIOD OF TIME PER THE NEW BRAUNFELS DRAINAGE AND EROSION CONTROL DESIGN MANUAL SEC.12.2(N).

DESIGN

INTERIM REVIEW

DOCUMENT INCOMPLETE. NOT INTENDED FOR PERMIT, BIDDING OR CONSTRUCTION.
ENGINEER: TYLER PAYNE DUBE
P.E. SERIAL NO: 118612
DATE: 1/9/2020

APPROVAL

INTERIM REVIEW

DOCUMENT INCOMPLETE. NOT INTENDED FOR PERMIT, BIDDING OR CONSTRUCTION.
ENGINEER: JOHN A. TYLER
P.E. SERIAL NO: 105193
DATE: 1/9/2020

0 10 20 30 60

SCALE: PLAN 1":30' PROFILE 1":3'

REV. NO.	DATE	DESCRIPTION	BY

PAPE-DAWSON ENGINEERS
SAN ANTONIO | AUSTIN | HOUSTON | FORT WORTH | DALLAS
2000 NW LOOP 410 | SAN ANTONIO, TX 78213 | 210.375.9000
TBPE FIRM REGISTRATION #470 | TBPLS FIRM REGISTRATION #10028800

City of New Braunfels

KLEIN RD PHASE 2

ROADWAY PLAN & PROFILE

STA 115+50 TO STA 118+50

SHEET 6 OF 18

DGN:	STATE	PROJECT NO.	ROADWAY
CHK DGN:	TEXAS	NB 18-026	KLEIN RD
DWG:	COUNTY	CITY	SHEET NO.
CHK DWG:	GUADALUPE	NEW BRAUNFELS	122

Design Filename: H:\Projects\510\30\03\Design\Civil\Roadway\5103003pp06.dgn

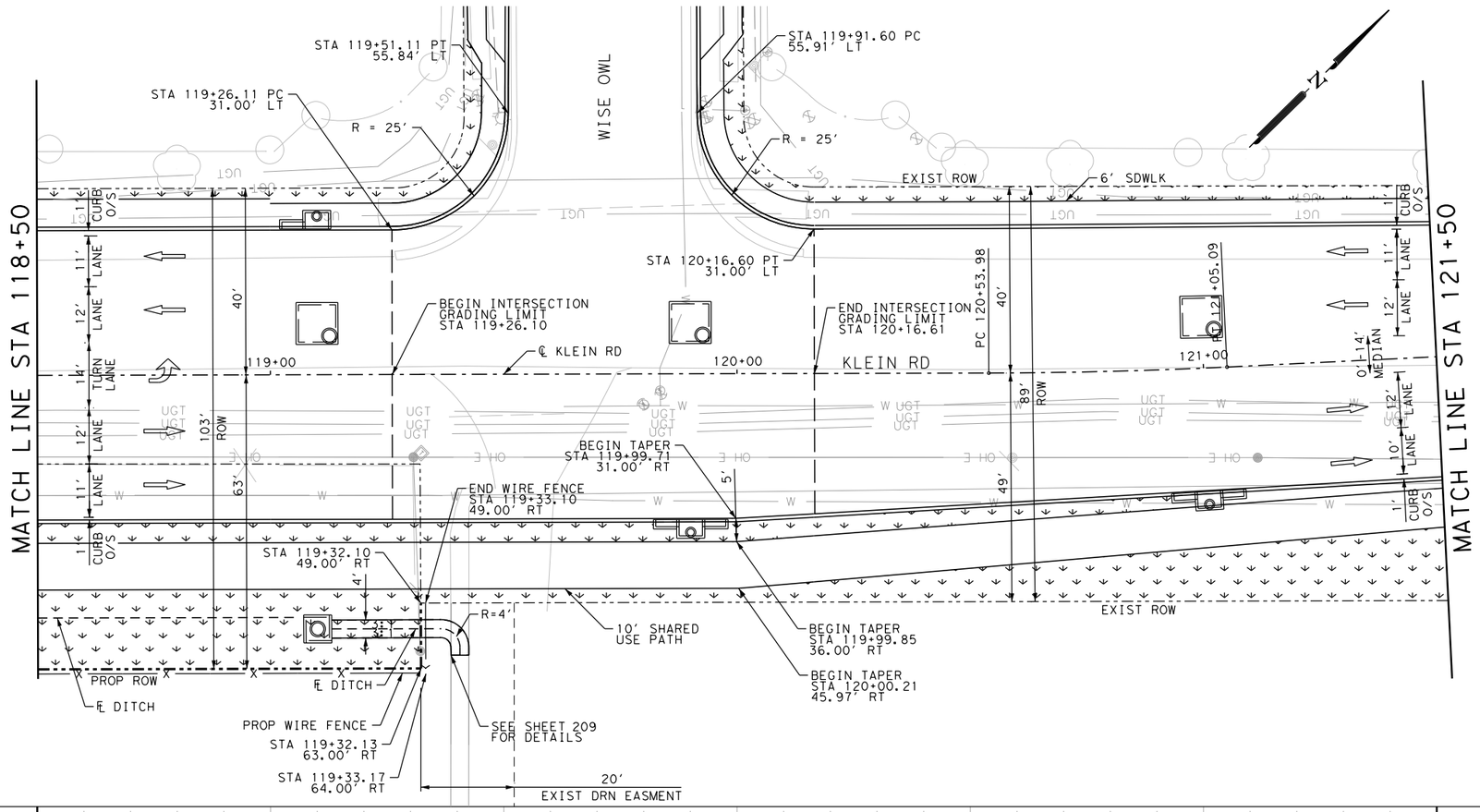

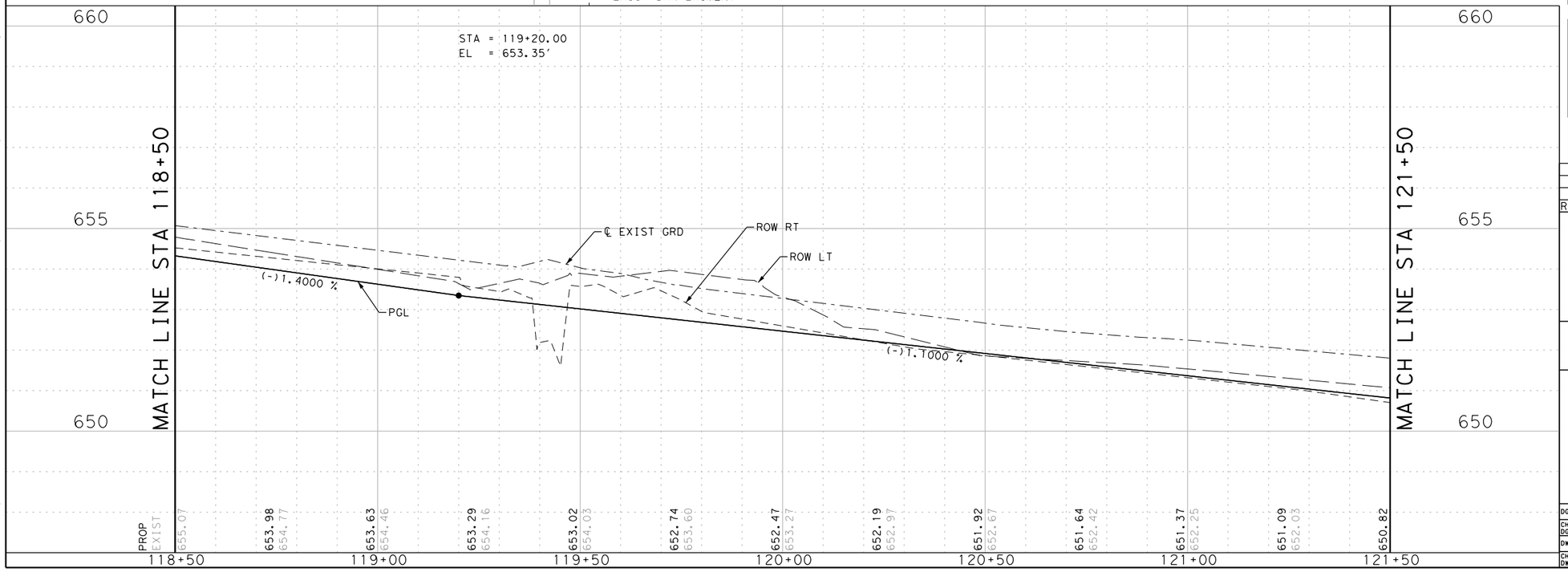

ITEM	DESCRIPTION	UNIT	QTY
500.1	Concrete Curb	LF	687
0110-6001	EXCAVATION (ROADWAY)	CY	2036
0132-6005	EMBANKMENT (FINAL)(ORD COMP)(TY C)	CY	46
0160-6003	FURNISHING AND PLACING TOPSOIL (4")	SY	600
0162-6002	BLOCK SODDING	SY	600
0168-6001	VEGETATIVE WATERING	MG	9.40
0247-6041	FL BS (CMP IN PLC)(TYA GR1&2)(FNAL POS)	CY	987
0260-6001	LIME (HYDRATED LIME (DRY))	TON	38.7
0260-6011	LIME TRT (EXST MATL) (12")	SY	2582
0310-6001	PRIME COAT (MULTI OPTION)	GAL	708.30
0341-6028	D-GR HMA TY-C PG70-22	TON	390.0
0341-6049	D-GR HMA TY-D PG76-22	TON	390.0
0341-6281	TACK COAT	GAL	472.20
0531-6001	CONC SIDEWALKS (4")	SY	564
0531-6005	CURB RAMPS (TY 2)	EA	2
5001-6002	GEOGRID BASE REINFORCEMENT (TY II)	SY	2582
6210-XXXX	PVC MOISTURE BARRIER	SY	124

LEGEND

CURB INLET — SWALE/GRADING — MANHOLE
BLOCK SODDING — FIELD INLET — DROP INLET
TRAFFIC FLOW ARROW — (#) DRIVEWAY NO.

NOTES

1. SEE HORIZONTAL ALIGNMENT DATA SHEETS FOR HORIZONTAL ALIGNMENT DATA.
2. SEE INTERSECTION LAYOUT SHEETS FOR INTERSECTION DETAILS.
3. SEE PAVEMENT MARKING SHEETS FOR STRIPING AND TRAFFIC FLOW DETAILS.
4. EXISTING FEATURES ARE SHOWN SCREENED BACK; i.e. FADED.
5. ALL DIMENSIONS ARE TO EDGE OF PAVEMENT, CENTER OF MARKING OR FACE OF CURB UNLESS OTHERWISE NOTED.
6. STRIPPING OF VEGETATION FROM PROJECT SITES SHALL BE PHASED SO AS TO EXPOSE THE MINIMUM AMOUNT OF AREA TO SOIL EROSION FOR THE SHORTEST POSSIBLE PERIOD OF TIME PER THE NEW BRAUNFELS DRAINAGE AND EROSION CONTROL DESIGN MANUAL SEC.12.2(N).

DESIGN

INTERIM REVIEW
DOCUMENT INCOMPLETE. NOT INTENDED FOR PERMIT, BIDDING OR CONSTRUCTION.
ENGINEER: TYLER PAYNE DUBE
P.E. SERIAL NO: 118612
DATE: 1/9/2020

APPROVAL

INTERIM REVIEW
DOCUMENT INCOMPLETE. NOT INTENDED FOR PERMIT, BIDDING OR CONSTRUCTION.
ENGINEER: JOHN A. TYLER
P.E. SERIAL NO: 105193
DATE: 1/9/2020

0 10 20 30 60

SCALE: PLAN 1":30' PROFILE 1":3'

REV. NO.	DATE	DESCRIPTION	BY

PAPE-DAWSON ENGINEERS
SAN ANTONIO | AUSTIN | HOUSTON | FORT WORTH | DALLAS
2000 NW LOOP 410 | SAN ANTONIO, TX 78213 | 210.375.9000
TBPE FIRM REGISTRATION #470 | TBPLS FIRM REGISTRATION #10028800

City of New Braunfels

KLEIN RD PHASE 2

ROADWAY PLAN & PROFILE

STA 118+50 TO STA 121+50

SHEET 7 OF 18

DGN:	STATE	PROJECT NO.	ROADWAY
CHK DGN:	TEXAS	NB 18-026	KLEIN RD
DWG:	COUNTY	CITY	SHEET NO.
CHK DWG:	GUADALUPE	NEW BRAUNFELS	123

Plotted on: 1/9/2020

Design Filename: H:\Projects\510\30\03\Design\Civil\Roadway\5103003pp07.dgn

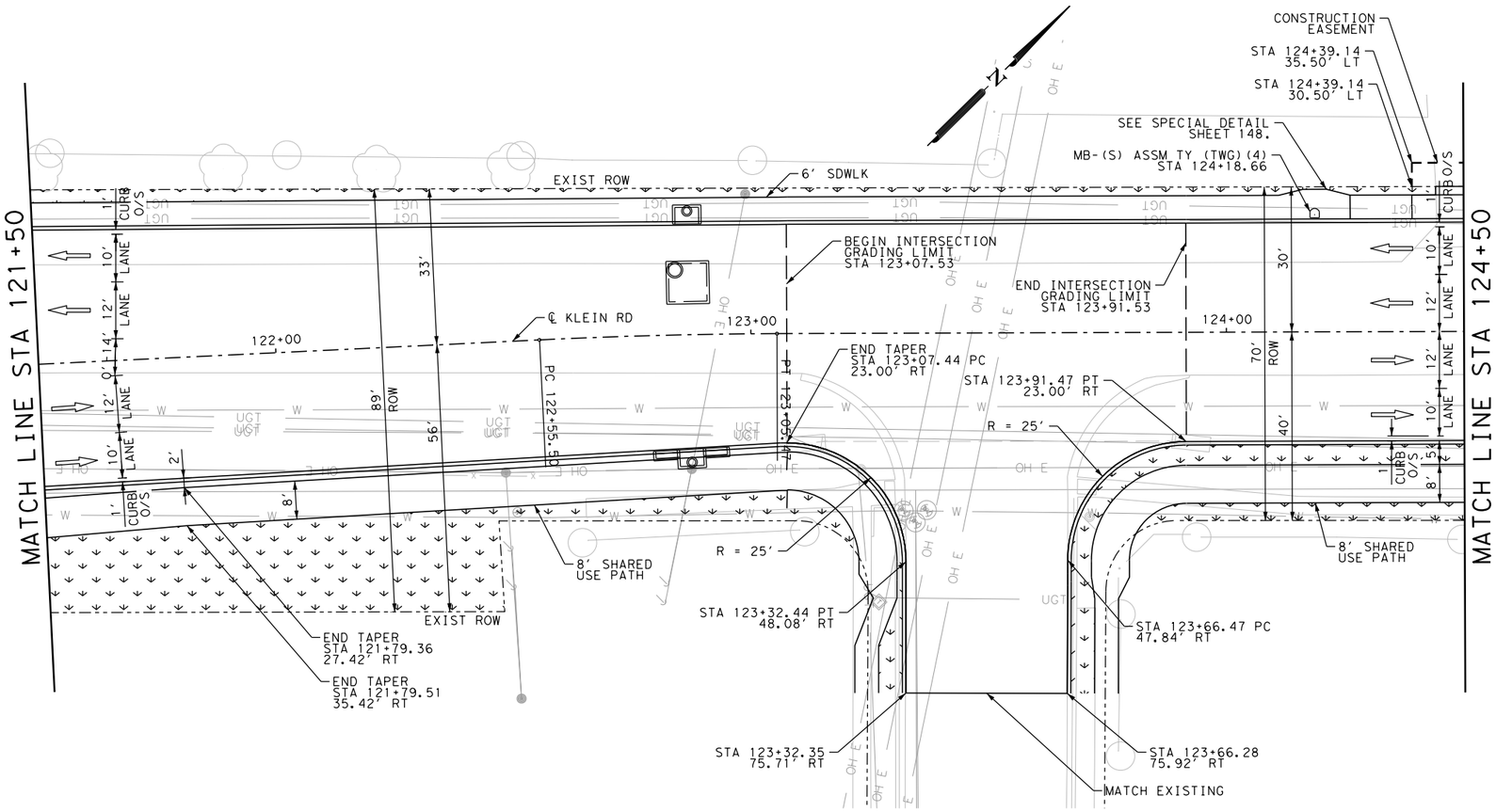

ITEM	DESCRIPTION	UNIT	QTY
500.1	Concrete Curb	LF	651
0110-6001	EXCAVATION (ROADWAY)	CY	1290
0132-6005	EMBANKMENT (FINAL)(ORD COMP)(TY C)	CY	27
0160-6003	FURNISHING AND PLACING TOPSOIL (4")	SY	543
0162-6002	BLOCK SODDING	SY	543
0168-6001	VEGETATIVE WATERING	MG	8.50
0247-6041	FL BS (CMP IN PLC)(TYA GR1&2)(FNAL POS)	CY	777
0260-6001	LIME (HYDRATED LIME (DRY))	TON	30.6
0260-6011	LIME TRT (EXST MATL) (12")	SY	2041
0310-6001	PRIME COAT (MULTI OPTION)	GAL	549.60
0341-6028	D-GR HMA TY-C PG70-22	TON	302.0
0341-6049	D-GR HMA TY-D PG76-22	TON	302.0
0341-6281	TACK COAT	GAL	366.40
0530-6004	DRIVEWAYS (CONC)	SY	8
0531-6001	CONC SIDEWALKS (4")	SY	339
0531-6006	CURB RAMPS (TY 3)	EA	2
0560-6014	MAILBOX INSTALL-S (TWG-POST) TY 4	EA	1
5001-6002	GEOGRID BASE REINFORCEMENT (TY II)	SY	2041
6210-XXXX	PVC MOISTURE BARRIER	SY	144

LEGEND

CURB INLET — SWALE/GRADING — MANHOLE
BLOCK SODDING — FIELD INLET — DROP INLET
TRAFFIC FLOW ARROW — DRIVEWAY NO.

NOTES

1. SEE HORIZONTAL ALIGNMENT DATA SHEETS FOR HORIZONTAL ALIGNMENT DATA.
2. SEE INTERSECTION LAYOUT SHEETS FOR INTERSECTION DETAILS.
3. SEE PAVEMENT MARKING SHEETS FOR STRIPING AND TRAFFIC FLOW DETAILS.
4. EXISTING FEATURES ARE SHOWN SCREENED BACK; i.e. FADED.
5. ALL DIMENSIONS ARE TO EDGE OF PAVEMENT, CENTER OF MARKING OR FACE OF CURB UNLESS OTHERWISE NOTED.
6. STRIPPING OF VEGETATION FROM PROJECT SITES SHALL BE PHASED SO AS TO EXPOSE THE MINIMUM AMOUNT OF AREA TO SOIL EROSION FOR THE SHORTEST POSSIBLE PERIOD OF TIME PER THE NEW BRAUNFELS DRAINAGE AND EROSION CONTROL DESIGN MANUAL SEC.12.2(N).

DESIGN

INTERIM REVIEW

DOCUMENT INCOMPLETE. NOT INTENDED FOR PERMIT, BIDDING OR CONSTRUCTION.
ENGINEER: TYLER PAYNE DUBE
P.E. SERIAL NO: 118612
DATE: 1/9/2020

APPROVAL

INTERIM REVIEW

DOCUMENT INCOMPLETE. NOT INTENDED FOR PERMIT, BIDDING OR CONSTRUCTION.
ENGINEER: JOHN A. TYLER
P.E. SERIAL NO: 105193
DATE: 1/9/2020

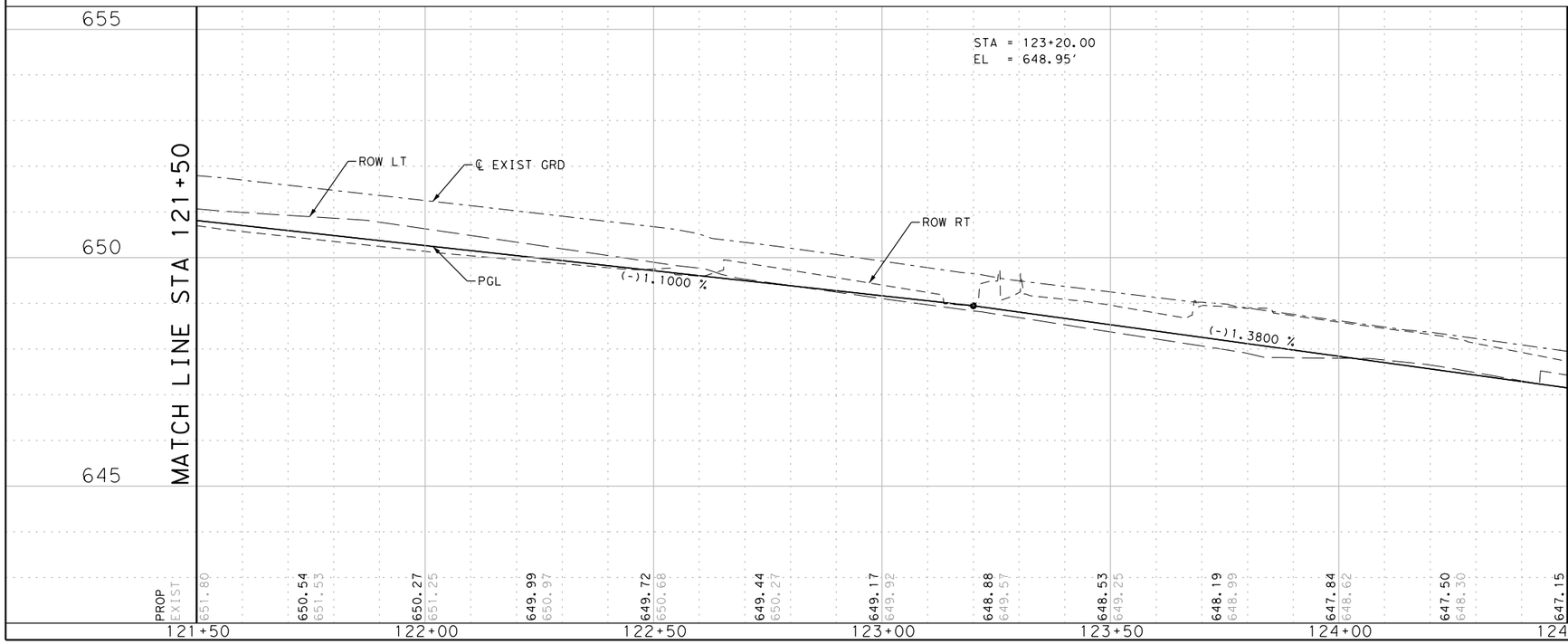

0 10 20 30 60

SCALE: PLAN 1":30' PROFILE 1":3'

REV. NO.	DATE	DESCRIPTION	BY

PAPE-DAWSON ENGINEERS
SAN ANTONIO | AUSTIN | HOUSTON | FORT WORTH | DALLAS
2000 NW LOOP 410 | SAN ANTONIO, TX 78213 | 210.375.9000
TBPE FIRM REGISTRATION #470 | TBPLS FIRM REGISTRATION #10028800

City of New Braunfels

KLEIN RD PHASE 2

ROADWAY PLAN & PROFILE

STA 121+50 TO STA 124+50

SHEET 8 OF 18

DGN:	STATE	PROJECT NO.	ROADWAY
CHK DGN:	TEXAS	NB 18-026	KLEIN RD
DWG:	COUNTY	CITY	SHEET NO.
CHK DWG:	GUADALUPE	NEW BRAUNFELS	124

Plotted on: 1/9/2020

Design Filename: H:\Projects\510\30\03\Design\Civil\Roadway\5103003pp08.dgn

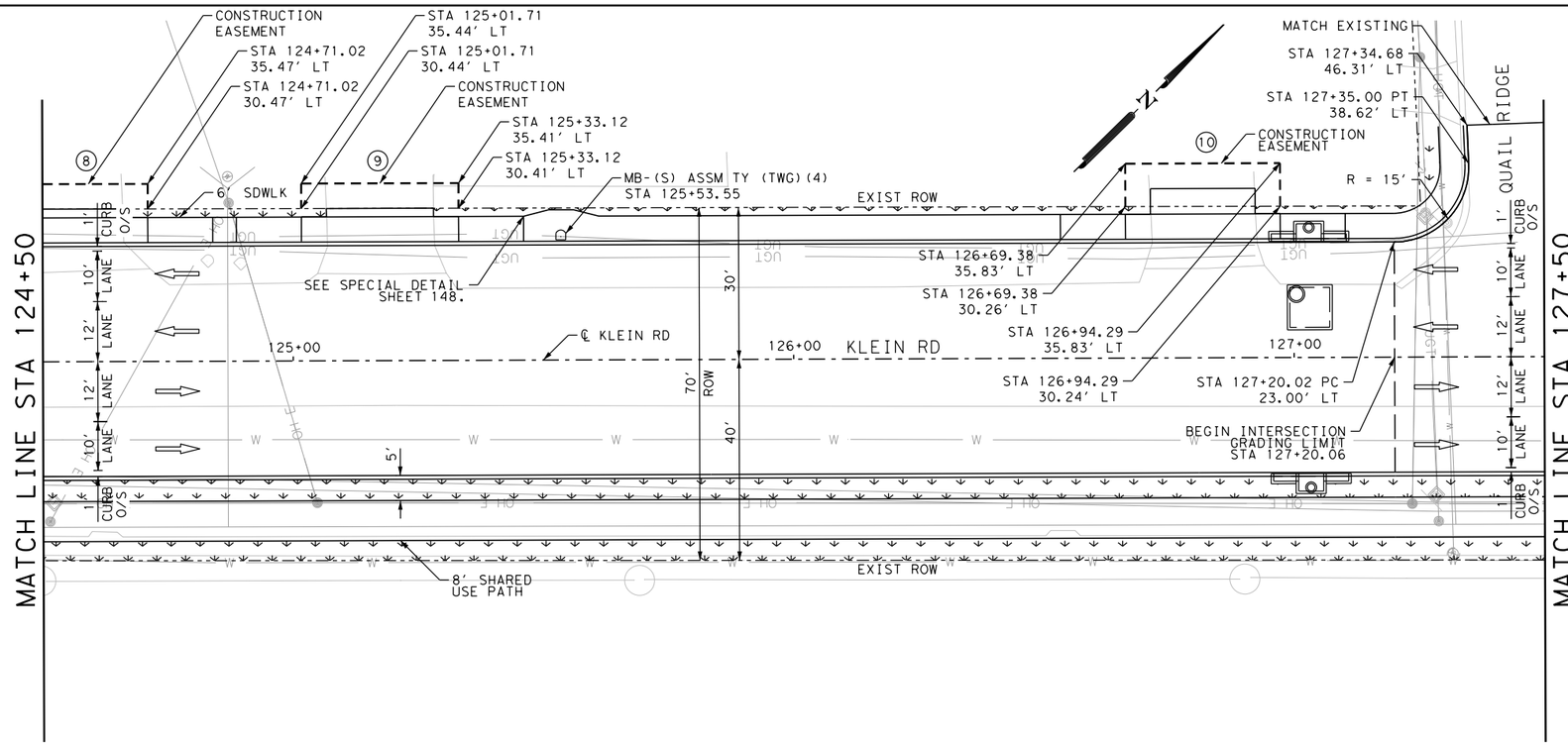

ITEM	DESCRIPTION	UNIT	QTY
500.1	Concrete Curb	LF	619
0110-6001	EXCAVATION (ROADWAY)	CY	1168
0132-6005	EMBANKMENT (FINAL)(ORD COMP)(TY C)	CY	51
0160-6003	FURNISHING AND PLACING TOPSOIL (4")	SY	327
0162-6002	BLOCK SODDING	SY	327
0168-6001	VEGETATIVE WATERING	MG	5.20
0247-6041	FL BS (CMP IN PLC)(TYA GR1&2)(FNAL POS)	CY	674
0260-6001	LIME (HYDRATED LIME (DRY))	TON	26.6
0260-6011	LIME TRT (EXST MATL) (12")	SY	1773
0310-6001	PRIME COAT (MULTI OPTION)	GAL	473.40
0341-6028	D-GR HMA TY-C PG70-22	TON	260.0
0341-6049	D-GR HMA TY-D PG76-22	TON	260.0
0341-6281	TACK COAT	GAL	315.60
0530-6004	DRIVEWAYS (CONC)	SY	65
0531-6001	CONC SIDEWALKS (4")	SY	434
0531-6005	CURB RAMPS (TY 2)	EA	1
0560-6014	MAILBOX INSTALL-S (TWG-POST) TY 4	EA	1
5001-6002	GEOGRID BASE REINFORCEMENT (TY II)	SY	1773
6210-XXXX	PVC MOISTURE BARRIER	SY	124

LEGEND

CURB INLET
SWALE/GRADING
MANHOLE
BLOCK SODDING
FIELD INLET
DROP INLET
TRAFFIC FLOW ARROW
DRIVEWAY NO.

NOTES

1. SEE HORIZONTAL ALIGNMENT DATA SHEETS FOR HORIZONTAL ALIGNMENT DATA.
2. SEE INTERSECTION LAYOUT SHEETS FOR INTERSECTION DETAILS.
3. SEE PAVEMENT MARKING SHEETS FOR STRIPING AND TRAFFIC FLOW DETAILS.
4. EXISTING FEATURES ARE SHOWN SCREENED BACK; i.e. FADED.
5. ALL DIMENSIONS ARE TO EDGE OF PAVEMENT, CENTER OF MARKING OR FACE OF CURB UNLESS OTHERWISE NOTED.
6. STRIPPING OF VEGETATION FROM PROJECT SITES SHALL BE PHASED SO AS TO EXPOSE THE MINIMUM AMOUNT OF AREA TO SOIL EROSION FOR THE SHORTEST POSSIBLE PERIOD OF TIME PER THE NEW BRAUNFELS DRAINAGE AND EROSION CONTROL DESIGN MANUAL SEC.12.2(N).

DESIGN

INTERIM REVIEW

DOCUMENT INCOMPLETE. NOT INTENDED FOR PERMIT, BIDDING OR CONSTRUCTION.
ENGINEER: TYLER PAYNE DUBE
P.E. SERIAL NO: 118612
DATE: 1/9/2020

APPROVAL

INTERIM REVIEW

DOCUMENT INCOMPLETE. NOT INTENDED FOR PERMIT, BIDDING OR CONSTRUCTION.
ENGINEER: JOHN A. TYLER
P.E. SERIAL NO: 105193
DATE: 1/9/2020

0 10 20 30 60

SCALE: PLAN 1":30' PROFILE 1":3'

REV. NO.	DATE	DESCRIPTION	BY

PAPE-DAWSON ENGINEERS
SAN ANTONIO | AUSTIN | HOUSTON | FORT WORTH | DALLAS
2000 NW LOOP 410 | SAN ANTONIO, TX 78213 | 210.375.9000
TBPE FIRM REGISTRATION #470 | TBPLS FIRM REGISTRATION #10028800

City of New Braunfels

KLEIN RD PHASE 2

ROADWAY PLAN & PROFILE

STA 124+50 TO STA 127+50

SHEET 9 OF 18

DGN:	STATE	PROJECT NO.	ROADWAY
CHK DGN:	TEXAS	NB 18-026	KLEIN RD
DWG:	COUNTY	CITY	SHEET NO.
CHK DWG:	GUADALUPE	NEW BRAUNFELS	125

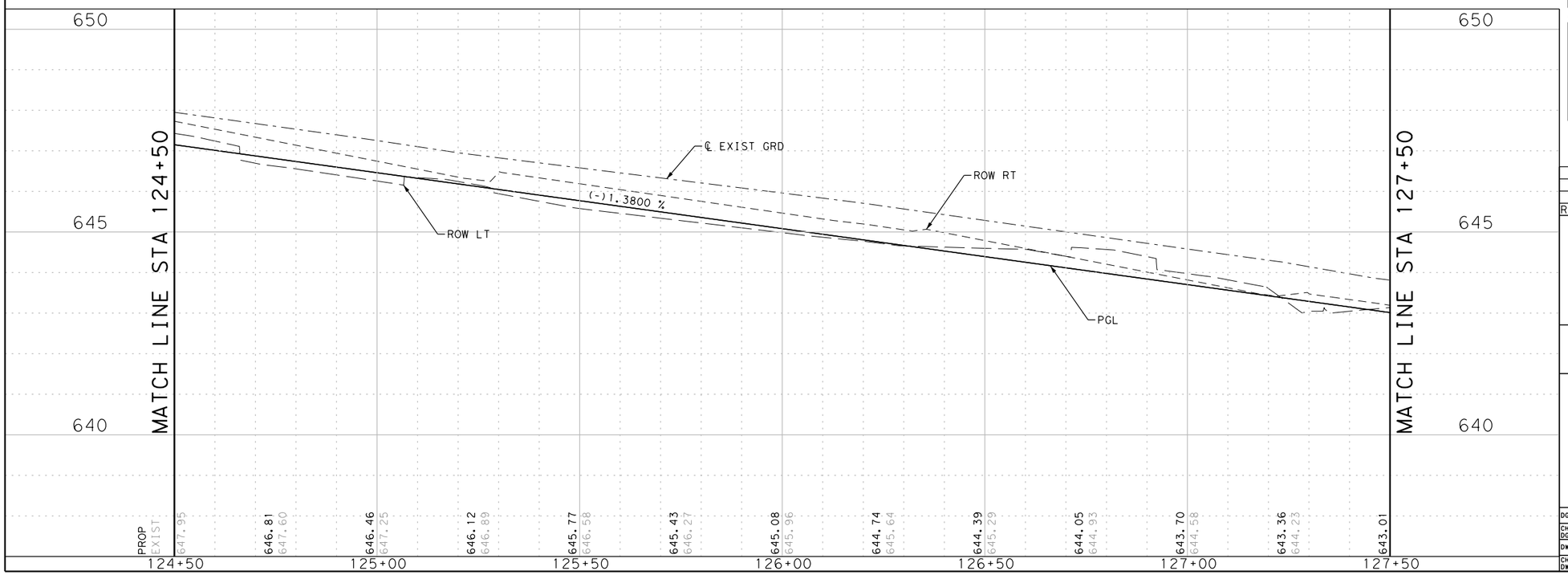

Plotted on: 1/9/2020

Design Filename: H:\Projects\510\30\03\Design\Civil\Roadway\5103003pp09.dgn

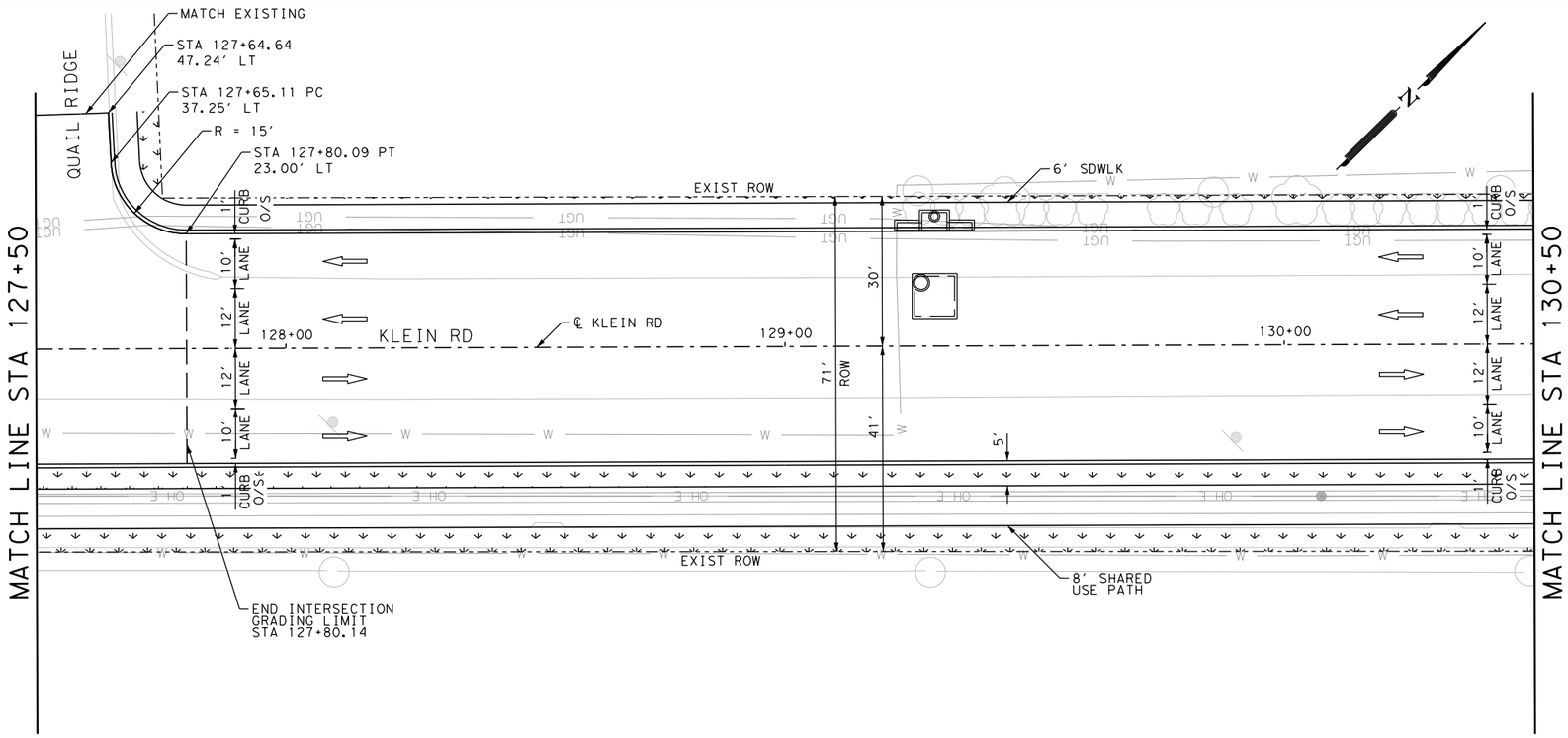

ITEM	DESCRIPTION	UNIT	QTY
500.1	Concrete Curb	LF	618
0110-6001	EXCAVATION (ROADWAY)	CY	1351
0132-6005	EMBANKMENT (FINAL)(ORD COMP)(TY C)	CY	18
0160-6003	FURNISHING AND PLACING TOPSOIL (4")	SY	371
0162-6002	BLOCK SODDING	SY	371
0168-6001	VEGETATIVE WATERING	MG	5.80
0247-6041	FL BS (CMP IN PLC)(TYA GR1&2)(FNAL POS)	CY	674
0260-6001	LIME (HYDRATED LIME (DRY))	TON	26.6
0260-6011	LIME TRT (EXST MATL) (12")	SY	1773
0310-6001	PRIME COAT (MULTI OPTION)	GAL	473.40
0341-6028	D-GR HMA TY-C PG70-22	TON	260.0
0341-6049	D-GR HMA TY-D PG76-22	TON	260.0
0341-6281	TACK COAT	GAL	315.60
0531-6001	CONC SIDEWALKS (4")	SY	434
0531-6005	CURB RAMPS (TY 2)	EA	1
5001-6002	GEOGRID BASE REINFORCEMENT (TY II)	SY	1773
6210-XXXX	PVC MOISTURE BARRIER	SY	124

LEGEND

CURB INLET — SWALE/GRADING — MANHOLE

BLOCK SODDING — FIELD INLET — DROP INLET

TRAFFIC FLOW ARROW — DRIVEWAY NO.

NOTES

1. SEE HORIZONTAL ALIGNMENT DATA SHEETS FOR HORIZONTAL ALIGNMENT DATA.
2. SEE INTERSECTION LAYOUT SHEETS FOR INTERSECTION DETAILS.
3. SEE PAVEMENT MARKING SHEETS FOR STRIPING AND TRAFFIC FLOW DETAILS.
4. EXISTING FEATURES ARE SHOWN SCREENED BACK; i.e. FADED.
5. ALL DIMENSIONS ARE TO EDGE OF PAVEMENT, CENTER OF MARKING OR FACE OF CURB UNLESS OTHERWISE NOTED.
6. STRIPPING OF VEGETATION FROM PROJECT SITES SHALL BE PHASED SO AS TO EXPOSE THE MINIMUM AMOUNT OF AREA TO SOIL EROSION FOR THE SHORTEST POSSIBLE PERIOD OF TIME PER THE NEW BRAUNFELS DRAINAGE AND EROSION CONTROL DESIGN MANUAL SEC.12.2(N).

DESIGN

INTERIM REVIEW

DOCUMENT INCOMPLETE. NOT INTENDED FOR PERMIT, BIDDING OR CONSTRUCTION.
ENGINEER: TYLER PAYNE DUBE
P.E. SERIAL NO: 118612
DATE: 1/9/2020

APPROVAL

INTERIM REVIEW

DOCUMENT INCOMPLETE. NOT INTENDED FOR PERMIT, BIDDING OR CONSTRUCTION.
ENGINEER: JOHN A. TYLER
P.E. SERIAL NO: 105193
DATE: 1/9/2020

0 10 20 30 60

SCALE: PLAN 1":30' PROFILE 1":3'

REV. NO.	DATE	DESCRIPTION	BY

PAPE-DAWSON ENGINEERS
SAN ANTONIO | AUSTIN | HOUSTON | FORT WORTH | DALLAS
2000 NW LOOP 410 | SAN ANTONIO, TX 78213 | 210.375.9000
TBPE FIRM REGISTRATION #470 | TBPLS FIRM REGISTRATION #10028800

City of New Braunfels

KLEIN RD PHASE 2

ROADWAY PLAN & PROFILE

STA 127+50 TO STA 130+50

SHEET 10 OF 18

DGN:	STATE	PROJECT NO.	ROADWAY
CHK DGN:	TEXAS	NB 18-026	KLEIN RD
DWG:	COUNTY	CITY	SHEET NO.
CHK DWG:	GUADALUPE	NEW BRAUNFELS	126

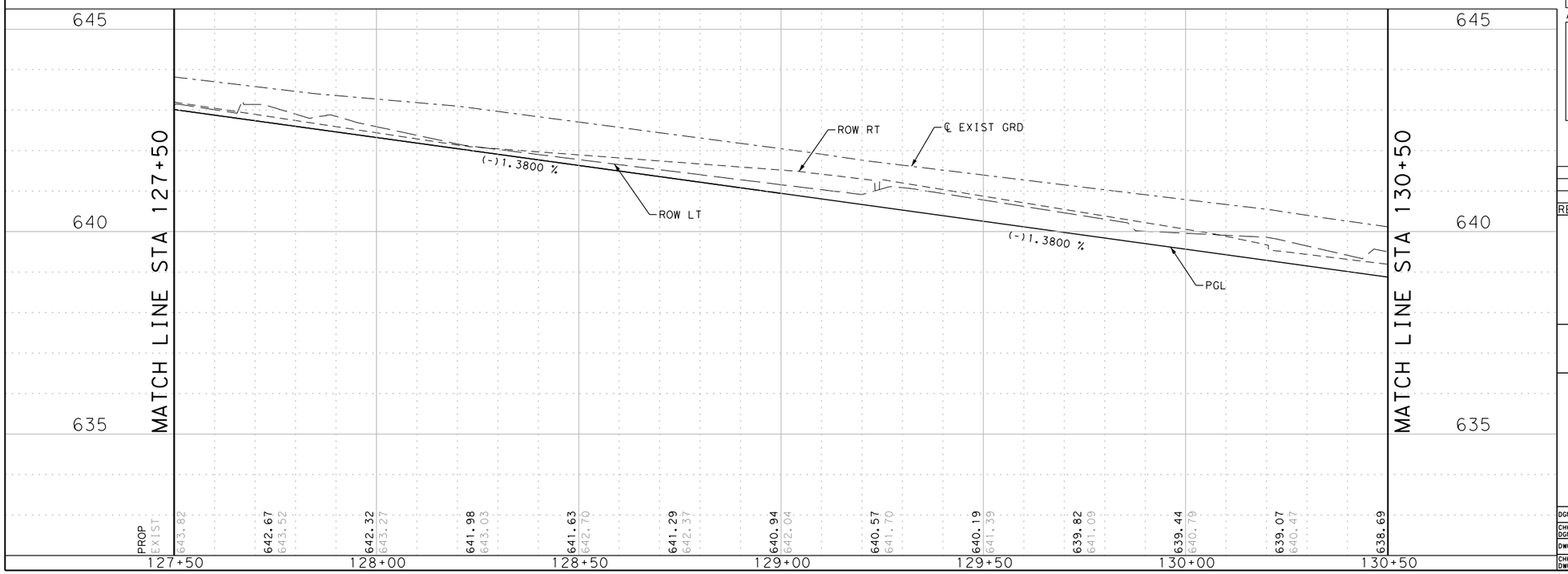

Plotted on: 1/9/2020

Design Filename: H:\Projects\510\30\03\Design\Civil\Roadway\5103003pp10.dgn

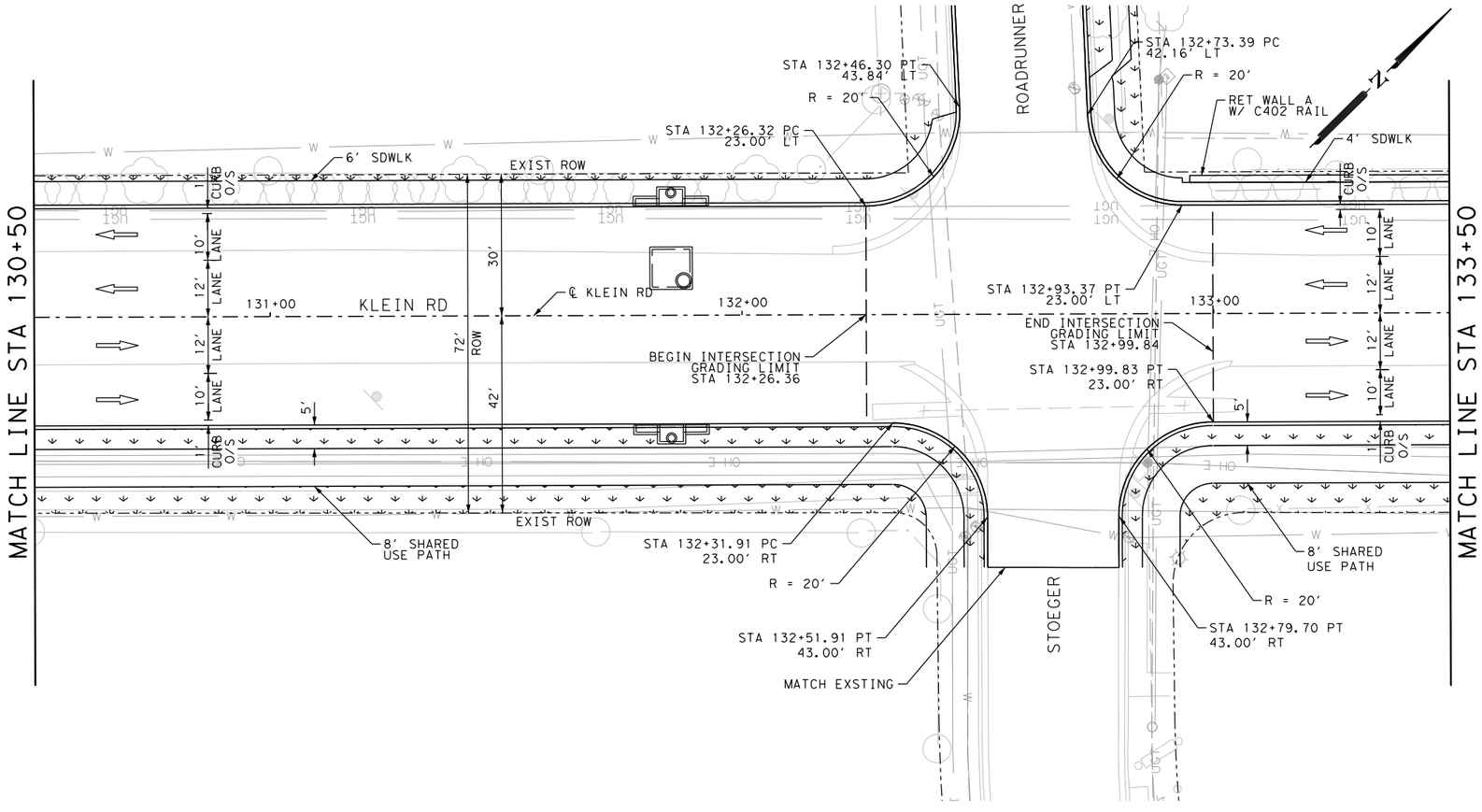

ITEM	DESCRIPTION	UNIT	QTY
500.1	Concrete Curb	LF	674
0110-6001	EXCAVATION (ROADWAY)	CY	1247
0132-6005	EMBANKMENT (FINAL)(ORD COMP)(TY C)	CY	127
0160-6003	FURNISHING AND PLACING TOPSOIL (4")	SY	384
0162-6002	BLOCK SODDING	SY	384
0168-6001	VEGETATIVE WATERING	MG	6.00
0247-6041	FL BS (CMP IN PLC)(TYA GR1&2)(FNAL POS)	CY	774
0260-6001	LIME (HYDRATED LIME (DRY))	TON	30.5
0260-6011	LIME TRT (EXST MATL) (12")	SY	2034
0310-6001	PRIME COAT (MULTI OPTION)	GAL	545.40
0341-6028	D-GR HMA TY-C PG70-22	TON	300.0
0341-6049	D-GR HMA TY-D PG76-22	TON	300.0
0341-6281	TACK COAT	GAL	363.60
0531-6001	CONC SIDEWALKS (4")	SY	464
0531-6005	CURB RAMPS (TY 2)	EA	2
0531-6006	CURB RAMPS (TY 3)	EA	2
5001-6002	GEOGRID BASE REINFORCEMENT (TY II)	SY	2034
6210-XXXX	PVC MOISTURE BARRIER	SY	130

LEGEND

CURB INLET — SWALE/GRADING — MANHOLE
BLOCK SODDING — FIELD INLET — DROP INLET
TRAFFIC FLOW ARROW — DRIVEWAY NO.

NOTES

1. SEE HORIZONTAL ALIGNMENT DATA SHEETS FOR HORIZONTAL ALIGNMENT DATA.
2. SEE INTERSECTION LAYOUT SHEETS FOR INTERSECTION DETAILS.
3. SEE PAVEMENT MARKING SHEETS FOR STRIPING AND TRAFFIC FLOW DETAILS.
4. EXISTING FEATURES ARE SHOWN SCREENED BACK; i.e. FADED.
5. ALL DIMENSIONS ARE TO EDGE OF PAVEMENT, CENTER OF MARKING OR FACE OF CURB UNLESS OTHERWISE NOTED.
6. STRIPPING OF VEGETATION FROM PROJECT SITES SHALL BE PHASED SO AS TO EXPOSE THE MINIMUM AMOUNT OF AREA TO SOIL EROSION FOR THE SHORTEST POSSIBLE PERIOD OF TIME PER THE NEW BRAUNFELS DRAINAGE AND EROSION CONTROL DESIGN MANUAL SEC.12.2(N).

DESIGN

INTERIM REVIEW

DOCUMENT INCOMPLETE. NOT INTENDED FOR PERMIT, BIDDING OR CONSTRUCTION.
ENGINEER: TYLER PAYNE DUBE
P.E. SERIAL NO: 118612
DATE: 1/9/2020

APPROVAL

INTERIM REVIEW

DOCUMENT INCOMPLETE. NOT INTENDED FOR PERMIT, BIDDING OR CONSTRUCTION.
ENGINEER: JOHN A. TYLER
P.E. SERIAL NO: 105193
DATE: 1/9/2020

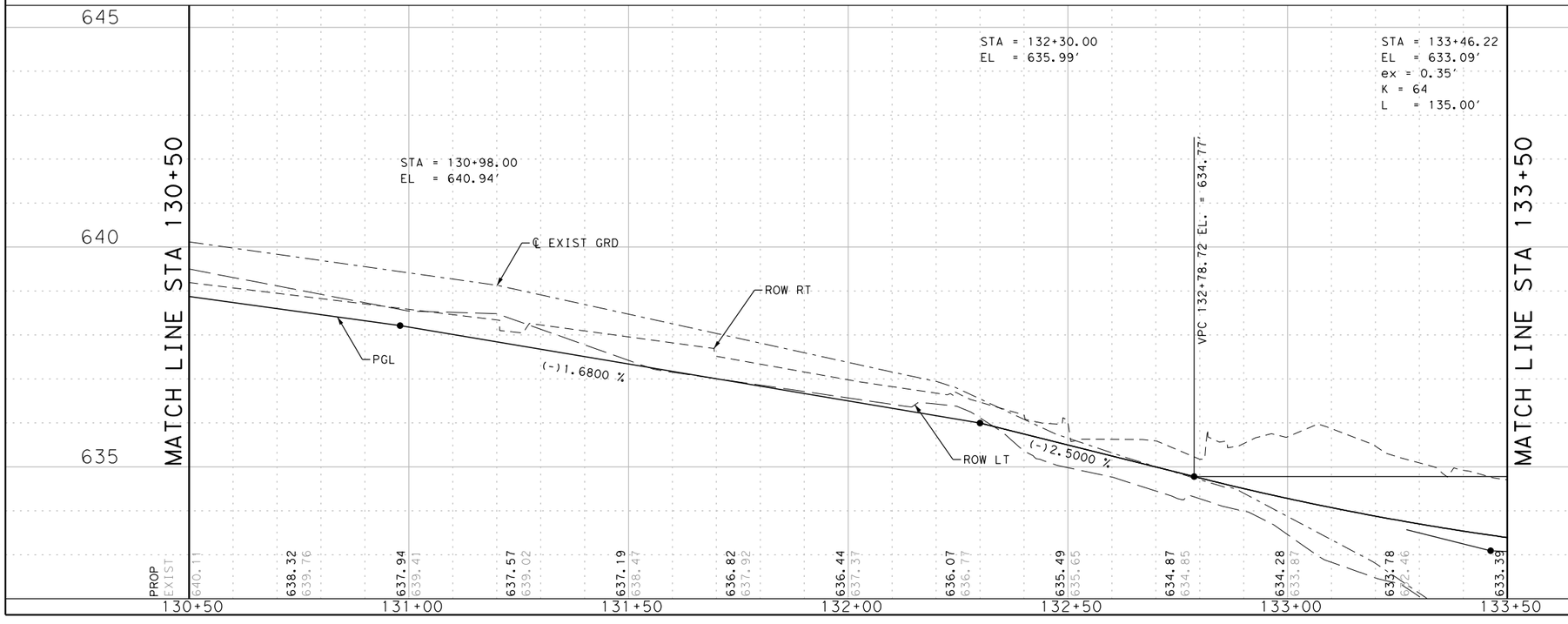

0 10 20 30 60

SCALE: PLAN 1":30' PROFILE 1":3'

REV. NO.	DATE	DESCRIPTION	BY

PAPE-DAWSON ENGINEERS
SAN ANTONIO | AUSTIN | HOUSTON | FORT WORTH | DALLAS
2000 NW LOOP 410 | SAN ANTONIO, TX 78213 | 210.375.9000
TBPE FIRM REGISTRATION #470 | TBPLS FIRM REGISTRATION #10028800

City of New Braunfels

KLEIN RD PHASE 2

ROADWAY PLAN & PROFILE

STA 130+50 TO STA 133+50

SHEET 11 OF 18

DGN:	STATE	PROJECT NO.	ROADWAY
CHK DGN:	TEXAS	NB 18-026	KLEIN RD
DWG:	COUNTY	CITY	SHEET NO.
CHK DWG:	GUADALUPE	NEW BRAUNFELS	127

Plotted on: 1/9/2020

Design Filename: H:\Projects\510\30\03\Design\Civil\Roadway\5103003ppl1.dgn

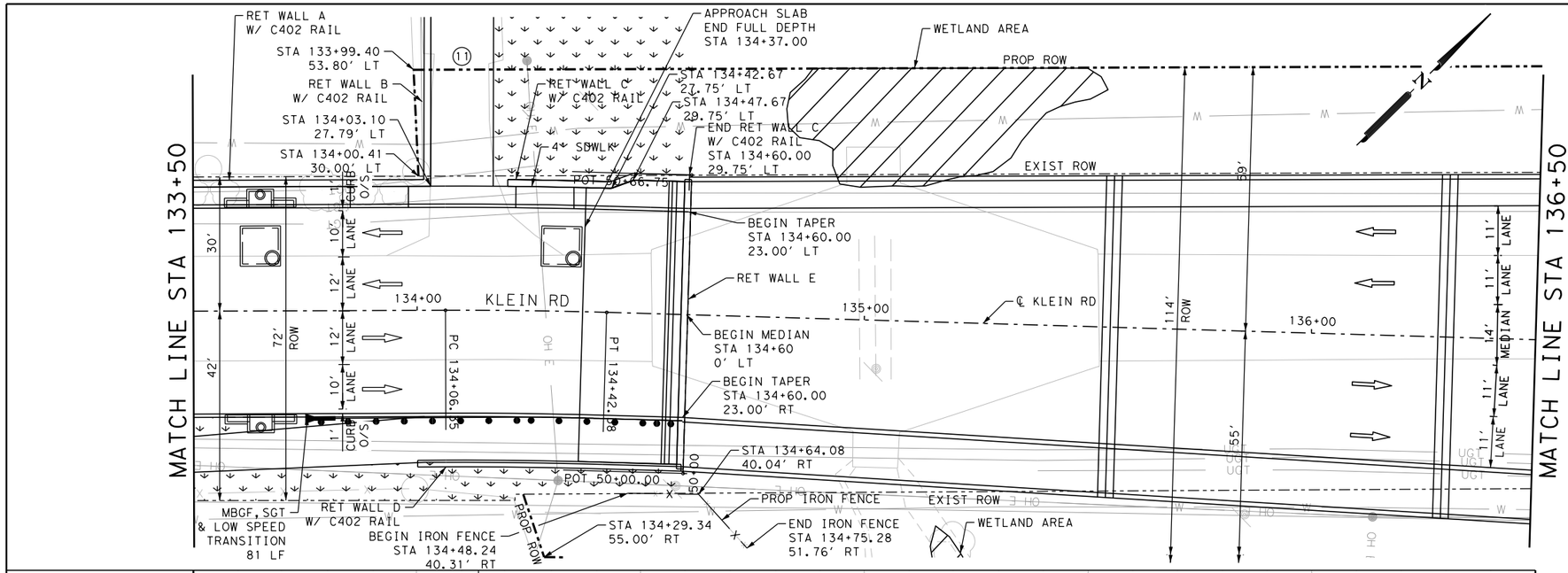

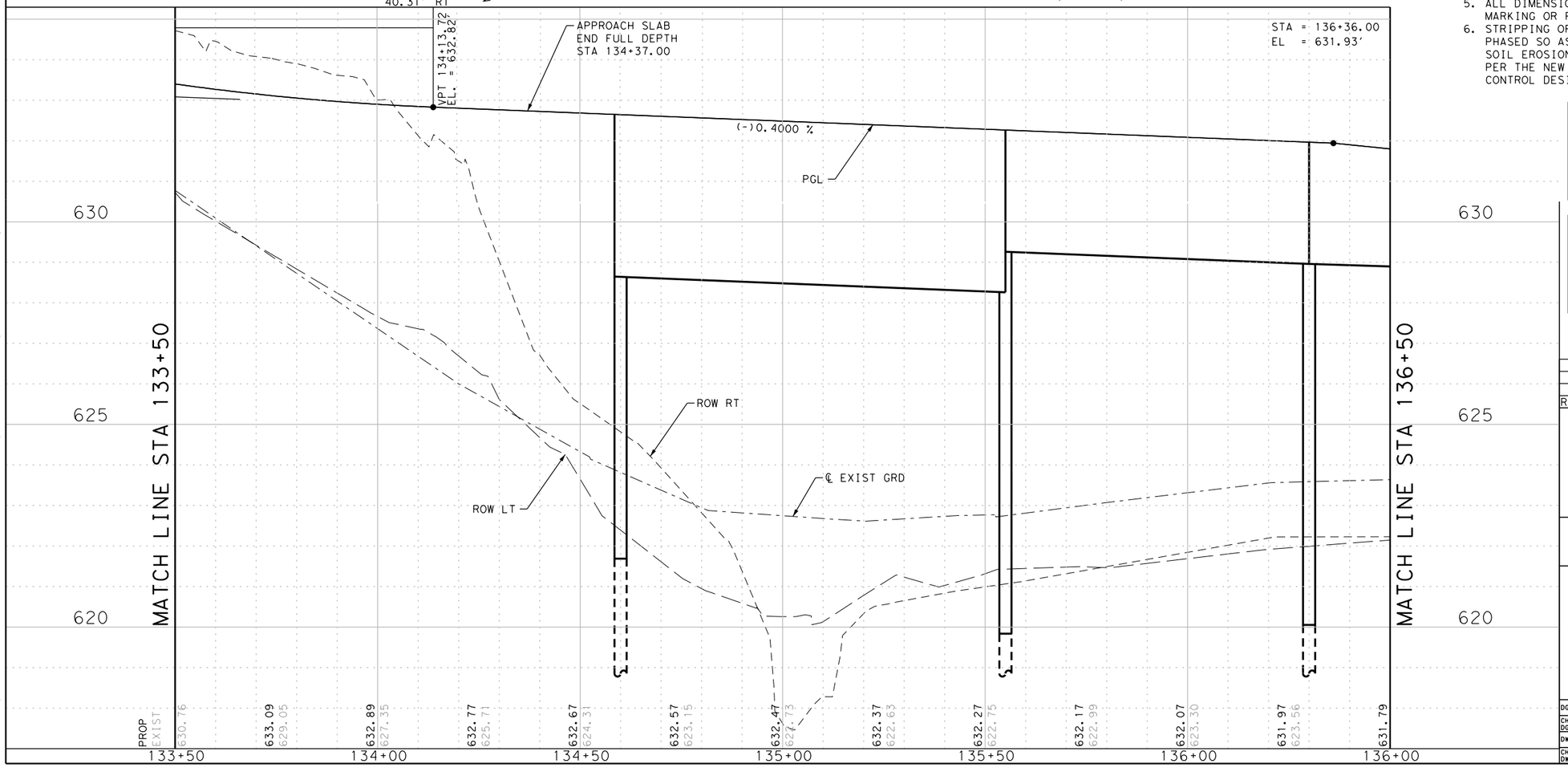

ITEM	DESCRIPTION	UNIT	QTY
500.1	Concrete Curb	LF	220
0110-6001	EXCAVATION (ROADWAY)	CY	42
0132-6005	EMBANKMENT (FINAL)(ORD COMP)(TY C)	CY	2188
0247-6041	FL BS (CMP IN PLC)(TYA GR1&2)(FNAL POS)	CY	241
0260-6001	LIME (HYDRATED LIME (DRY))	TON	9.5
0260-6011	LIME TRT (EXST MATL) (12")	SY	634
0310-6001	PRIME COAT (MULTI OPTION)	GAL	168.90
0341-6028	D-GR HMA TY-C PG70-22	TON	93.0
0341-6049	D-GR HMA TY-D PG76-22	TON	93.0
0341-6281	TACK COAT	GAL	112.60
0530-6004	DRIVEWAYS (CONC)	SY	195
0531-6001	CONC SIDEWALKS (4")	SY	165
0540-6001	MTL W-BEAM GD FEN (TIM POST)	LF	25
0540-6007	MTL BEAM GD FEN TRANS (TL2)	EA	1
0544-6001	GUARDRAIL END TREATMENT (INSTALL)	EA	1
5001-6002	GEOGRID BASE REINFORCEMENT (TY II)	SY	634
6210-XXXX	PVC MOISTURE BARRIER	SY	21

LEGEND

CURB INLET
BLOCK SODDING
TRAFFIC FLOW ARROW
SWALE/GRADING
FIELD INLET
DRIVEWAY NO.
MANHOLE
DROP INLET

NOTES

1. SEE HORIZONTAL ALIGNMENT DATA SHEETS FOR HORIZONTAL ALIGNMENT DATA.
2. SEE INTERSECTION LAYOUT SHEETS FOR INTERSECTION DETAILS.
3. SEE PAVEMENT MARKING SHEETS FOR STRIPING AND TRAFFIC FLOW DETAILS.
4. EXISTING FEATURES ARE SHOWN SCREENED BACK; i.e. FADED.
5. ALL DIMENSIONS ARE TO EDGE OF PAVEMENT, CENTER OF MARKING OR FACE OF CURB UNLESS OTHERWISE NOTED.
6. STRIPPING OF VEGETATION FROM PROJECT SITES SHALL BE PHASED SO AS TO EXPOSE THE MINIMUM AMOUNT OF AREA TO SOIL EROSION FOR THE SHORTEST POSSIBLE PERIOD OF TIME PER THE NEW BRAUNFELS DRAINAGE AND EROSION CONTROL DESIGN MANUAL SEC.12.2(N).

DESIGN

INTERIM REVIEW
DOCUMENT INCOMPLETE. NOT INTENDED FOR PERMIT, BIDDING OR CONSTRUCTION.
ENGINEER: TYLER PAYNE DUBE
P.E. SERIAL NO: 118612
DATE: 1/9/2020

APPROVAL

INTERIM REVIEW
DOCUMENT INCOMPLETE. NOT INTENDED FOR PERMIT, BIDDING OR CONSTRUCTION.
ENGINEER: JOHN A. TYLER
P.E. SERIAL NO: 105193
DATE: 1/9/2020

0 10 20 30 60

SCALE: PLAN 1":30' PROFILE 1":3'

REV. NO.	DATE	DESCRIPTION	BY

PAPE-DAWSON ENGINEERS
SAN ANTONIO | AUSTIN | HOUSTON | FORT WORTH | DALLAS
2000 NW LOOP 410 | SAN ANTONIO, TX 78213 | 210.375.9000
TBPE FIRM REGISTRATION #470 | TBPLS FIRM REGISTRATION #10028800

City of New Braunfels

KLEIN RD PHASE 2

ROADWAY PLAN & PROFILE

STA 133+50 TO STA 136+50

SHEET 12 OF 18

DGN:	STATE	PROJECT NO.	ROADWAY
CHK DGN:	TEXAS	NB 18-026	KLEIN RD
DWG:	COUNTY	CITY	SHEET NO.
CHK DWG:	GUADALUPE	NEW BRAUNFELS	128

Plotted on: 1/9/2020

Design Filename: H:\Projects\510\30\03\Design\Civil\Roadway\5103003ppl2.dgn

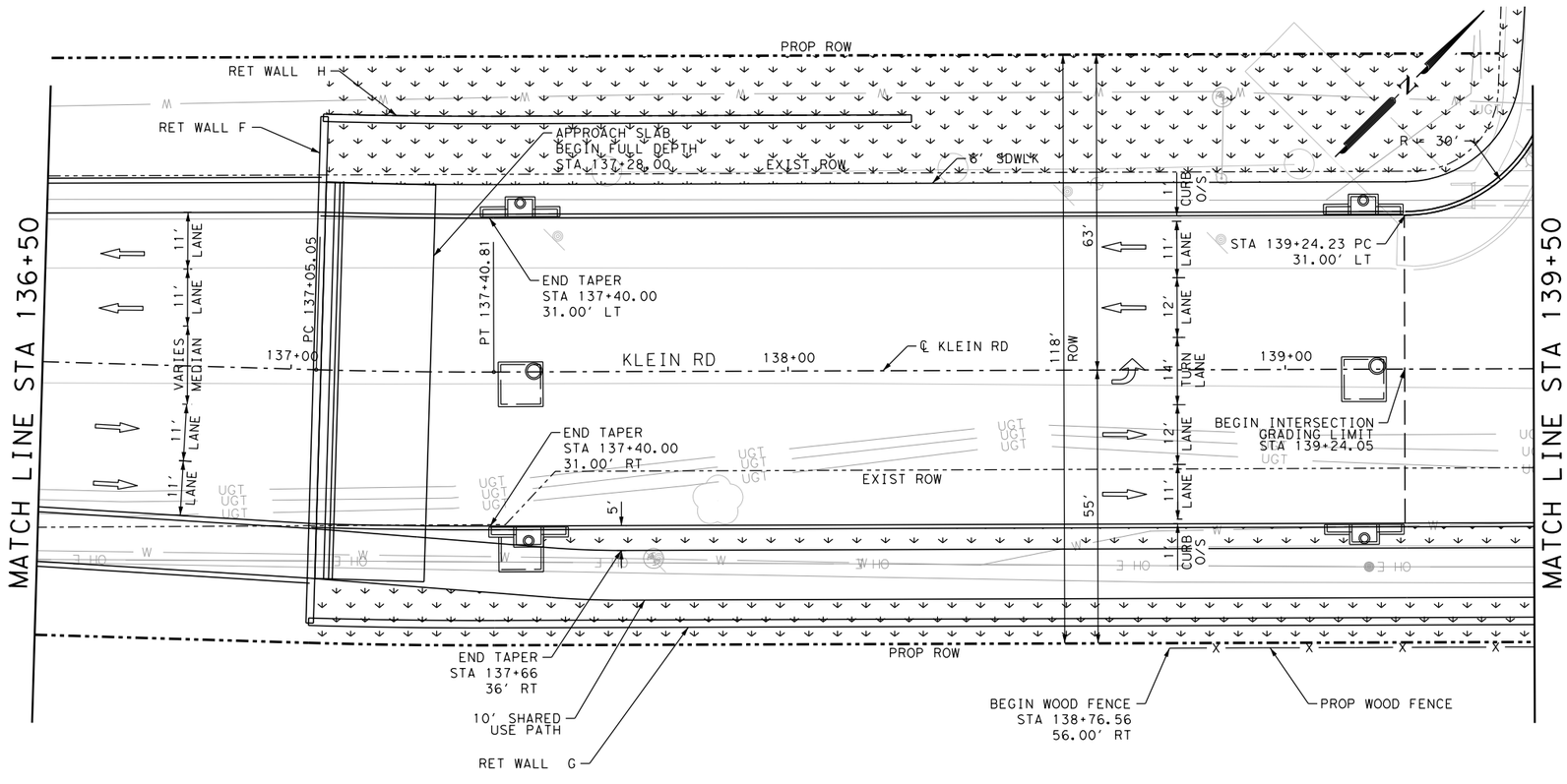

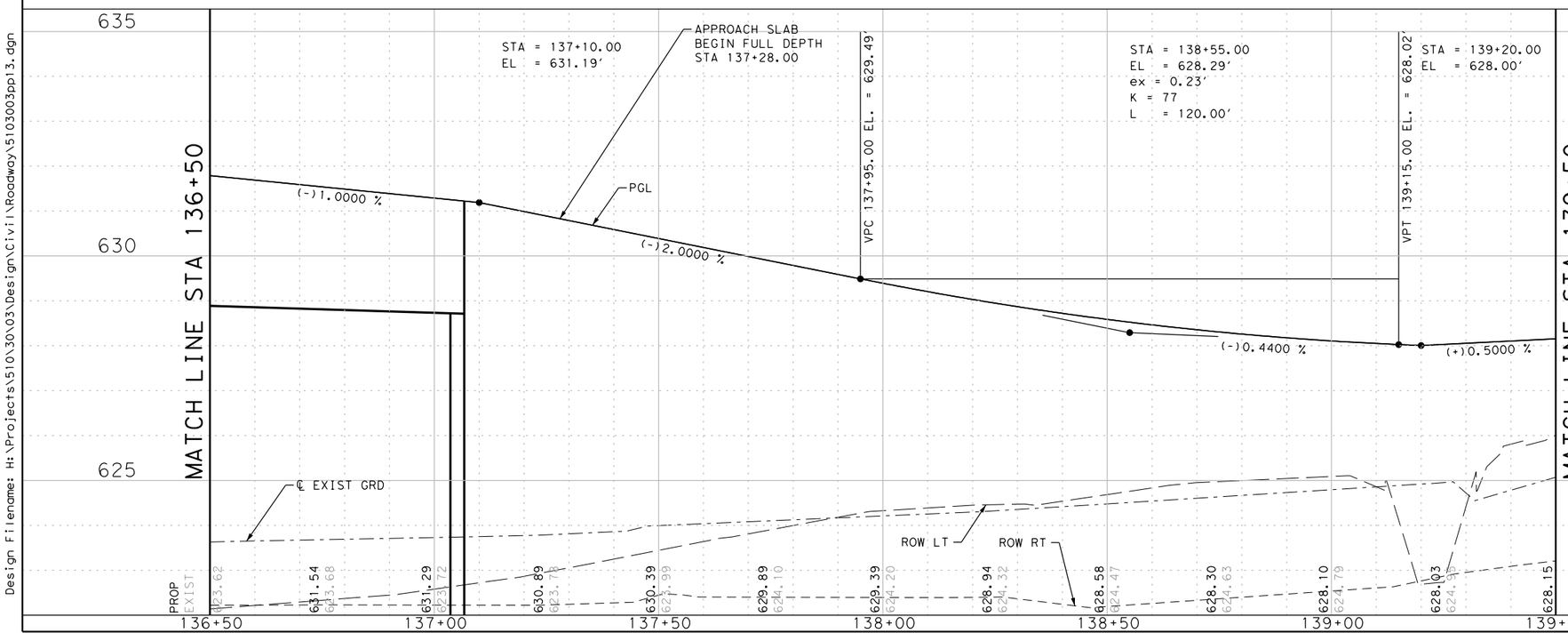

ITEM	DESCRIPTION	UNIT	QTY
500.1	Concrete Curb	LF	496
0110-6001	EXCAVATION (ROADWAY)	CY	126
0132-6005	EMBANKMENT (FINAL)(ORD COMP)(TY C)	CY	3800
0160-6003	FURNISHING AND PLACING TOPSOIL (4")	SY	1005
0162-6002	BLOCK SODDING	SY	1005
0168-6001	VEGETATIVE WATERING	MG	15.70
0247-6041	FL BS (CMP IN PLC)(TYA GR1&2)(FNAL POS)	CY	711
0260-6001	LIME (HYDRATED LIME (DRY))	TON	27.9
0260-6011	LIME TRT (EXST MATL) (12")	SY	1860
0310-6001	PRIME COAT (MULTI OPTION)	GAL	510.30
0341-6028	D-GR HMA TY-C PG70-22	TON	281.0
0341-6049	D-GR HMA TY-D PG76-22	TON	281.0
0341-6281	TACK COAT	GAL	340.20
0531-6001	CONC SIDEWALKS (4")	SY	465
5001-6002	GEOGRID BASE REINFORCEMENT (TY II)	SY	1860
6210-XXXX	PVC MOISTURE BARRIER	SY	102

LEGEND

CURB INLET
BLOCK SODDING
TRAFFIC FLOW ARROW
SWALE/GRADING
FIELD INLET
DRIVEWAY NO.
MANHOLE
DROP INLET

NOTES

1. SEE HORIZONTAL ALIGNMENT DATA SHEETS FOR HORIZONTAL ALIGNMENT DATA.
2. SEE INTERSECTION LAYOUT SHEETS FOR INTERSECTION DETAILS.
3. SEE PAVEMENT MARKING SHEETS FOR STRIPING AND TRAFFIC FLOW DETAILS.
4. EXISTING FEATURES ARE SHOWN SCREENED BACK; i.e. FADED.
5. ALL DIMENSIONS ARE TO EDGE OF PAVEMENT, CENTER OF MARKING OR FACE OF CURB UNLESS OTHERWISE NOTED.
6. STRIPPING OF VEGETATION FROM PROJECT SITES SHALL BE PHASED SO AS TO EXPOSE THE MINIMUM AMOUNT OF AREA TO SOIL EROSION FOR THE SHORTEST POSSIBLE PERIOD OF TIME PER THE NEW BRAUNFELS DRAINAGE AND EROSION CONTROL DESIGN MANUAL SEC.12.2(N).

DESIGN

INTERIM REVIEW

DOCUMENT INCOMPLETE. NOT INTENDED FOR PERMIT, BIDDING OR CONSTRUCTION.
ENGINEER: TYLER PAYNE DUBE
P.E. SERIAL NO: 118612
DATE: 1/9/2020

APPROVAL

INTERIM REVIEW

DOCUMENT INCOMPLETE. NOT INTENDED FOR PERMIT, BIDDING OR CONSTRUCTION.
ENGINEER: JOHN A. TYLER
P.E. SERIAL NO: 105193
DATE: 1/9/2020

0 10 20 30 60

SCALE: PLAN 1":30' PROFILE 1":3'

REV. NO.	DATE	DESCRIPTION	BY

PAPE-DAWSON ENGINEERS
SAN ANTONIO | AUSTIN | HOUSTON | FORT WORTH | DALLAS
2000 NW LOOP 410 | SAN ANTONIO, TX 78213 | 210.375.9000
TBPE FIRM REGISTRATION #470 | TBPLS FIRM REGISTRATION #10028800

City of New Braunfels

KLEIN RD PHASE 2

ROADWAY PLAN & PROFILE

STA 136+50 TO STA 139+50

SHEET 13 OF 18

DGN:	STATE	PROJECT NO.	ROADWAY
CHK DGN:	TEXAS	NB 18-026	KLEIN RD
DWG:	COUNTY	CITY	SHEET NO.
CHK DWG:	GUADALUPE	NEW BRAUNFELS	129

Plotted on: 1/9/2020

Design Filename: H:\Projects\510\30\03\Design\Civil\Roadway\5103003pp13.dgn

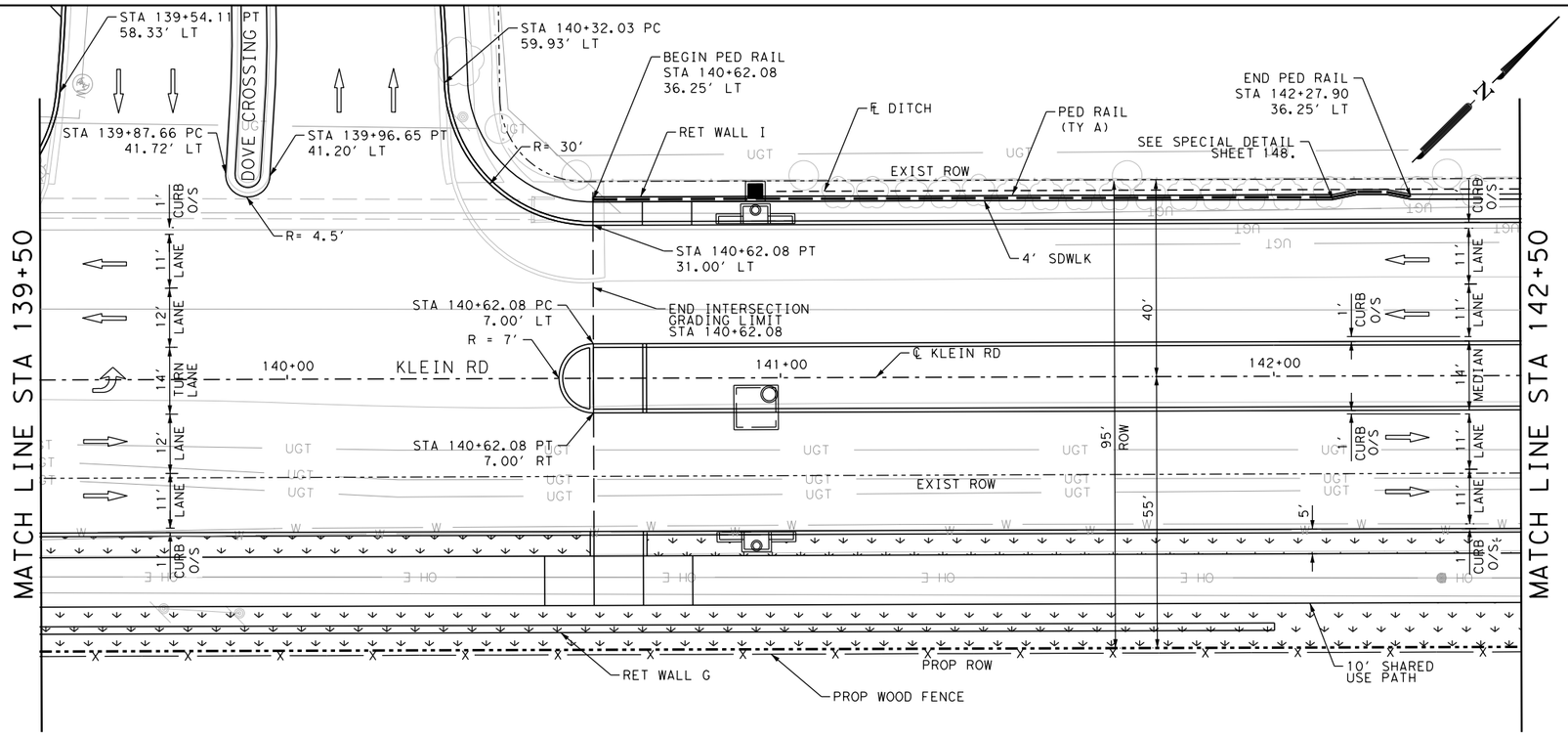

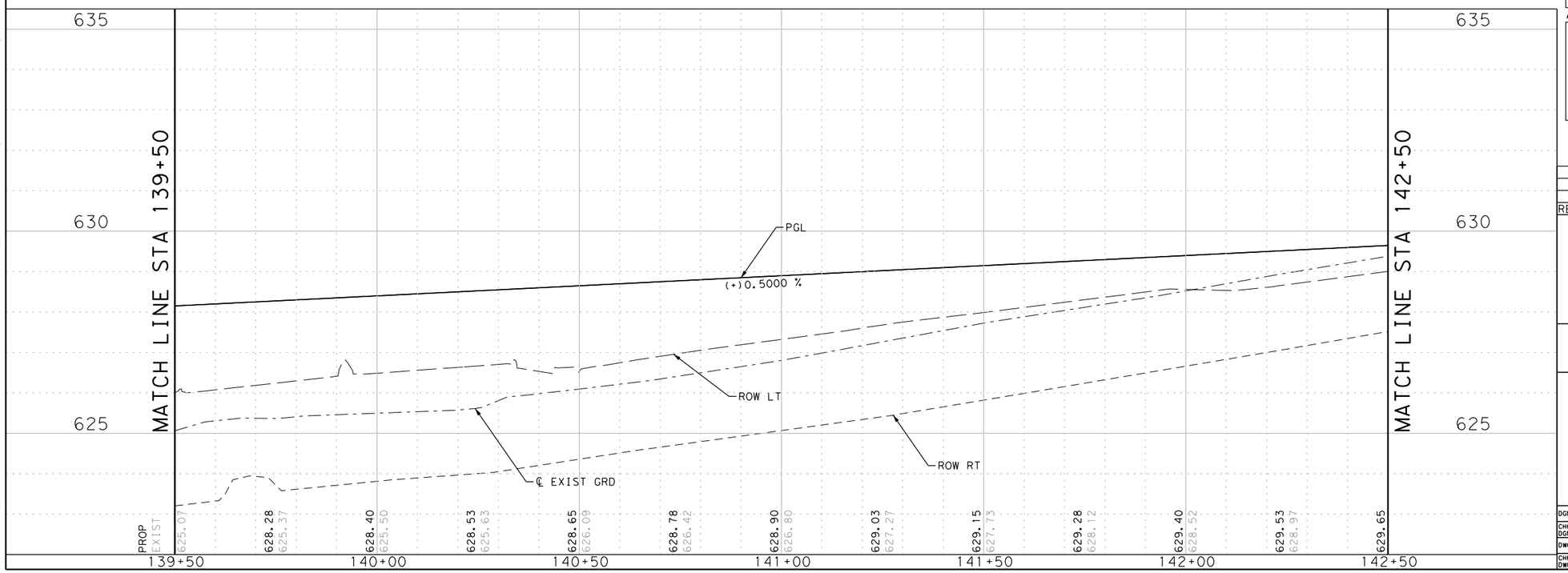

ITEM	DESCRIPTION	UNIT	QTY
500.1	Concrete Curb	LF	636
0110-6001	EXCAVATION (ROADWAY)	CY	201
0132-6005	EMBANKMENT (FINAL)(ORD COMP)(TY C)	CY	1623
0160-6003	FURNISHING AND PLACING TOPSOIL (4")	SY	672
0162-6002	BLOCK SODDING	SY	672
0168-6001	VEGETATIVE WATERING	MG	10.50
0247-6041	FL BS (CMP IN PLC)(TYA GR1&2)(FNAL POS)	CY	1027
0260-6001	LIME (HYDRATED LIME (DRY))	TON	40.7
0260-6011	LIME TRT (EXST MATL) (12")	SY	2716
0310-6001	PRIME COAT (MULTI OPTION)	GAL	702.60
0341-6028	D-GR HMA TY-C PG70-22	TON	386.0
0341-6049	D-GR HMA TY-D PG76-22	TON	386.0
0341-6281	TACK COAT	GAL	468.40
0531-6001	CONC SIDEWALKS (4")	SY	474
0531-6005	CURB RAMPS (TY 2)	EA	3
0531-6006	CURB RAMPS (TY 3)	EA	1
0536-6002	CONC MEDIAN	SY	366
5001-6002	GEOGRID BASE REINFORCEMENT (TY II)	SY	2716
6210-XXXX	PVC MOISTURE BARRIER	SY	124

LEGEND

CURB INLET
SWALE/GRADING
MANHOLE
BLOCK SODDING
FIELD INLET
DROP INLET
TRAFFIC FLOW ARROW
DRIVEWAY NO.

NOTES

1. SEE HORIZONTAL ALIGNMENT DATA SHEETS FOR HORIZONTAL ALIGNMENT DATA.
2. SEE INTERSECTION LAYOUT SHEETS FOR INTERSECTION DETAILS.
3. SEE PAVEMENT MARKING SHEETS FOR STRIPING AND TRAFFIC FLOW DETAILS.
4. EXISTING FEATURES ARE SHOWN SCREENED BACK; i.e. FADED.
5. ALL DIMENSIONS ARE TO EDGE OF PAVEMENT, CENTER OF MARKING OR FACE OF CURB UNLESS OTHERWISE NOTED.
6. STRIPPING OF VEGETATION FROM PROJECT SITES SHALL BE PHASED SO AS TO EXPOSE THE MINIMUM AMOUNT OF AREA TO SOIL EROSION FOR THE SHORTEST POSSIBLE PERIOD OF TIME PER THE NEW BRAUNFELS DRAINAGE AND EROSION CONTROL DESIGN MANUAL SEC.12.2(N).

DESIGN

INTERIM REVIEW
DOCUMENT INCOMPLETE. NOT INTENDED FOR PERMIT, BIDDING OR CONSTRUCTION.
ENGINEER: TYLER PAYNE DUBE
P.E. SERIAL NO: 118612
DATE: 1/9/2020

APPROVAL

INTERIM REVIEW
DOCUMENT INCOMPLETE. NOT INTENDED FOR PERMIT, BIDDING OR CONSTRUCTION.
ENGINEER: JOHN A. TYLER
P.E. SERIAL NO: 105193
DATE: 1/9/2020

0 10 20 30 60

SCALE: PLAN 1":30' PROFILE 1":3'

REV. NO.	DATE	DESCRIPTION	BY

PAPE-DAWSON ENGINEERS
SAN ANTONIO | AUSTIN | HOUSTON | FORT WORTH | DALLAS
2000 NW LOOP 410 | SAN ANTONIO, TX 78213 | 210.375.9000
TBPE FIRM REGISTRATION #470 | TBPLS FIRM REGISTRATION #10028800

City of New Braunfels

KLEIN RD PHASE 2

ROADWAY PLAN & PROFILE

STA 139+50 TO STA 142+50

DGN:	STATE	PROJECT NO.	ROADWAY
CHK DGN:	TEXAS	NB 18-026	KLEIN RD
DWG:	COUNTY	CITY	SHEET NO.
CHK DWG:	GUADALUPE	NEW BRAUNFELS	130

Plotted on: 1/9/2020

Design Filename: H:\Projects\510\30\03\Design\Civil\Roadway\5103003pp14.dgn

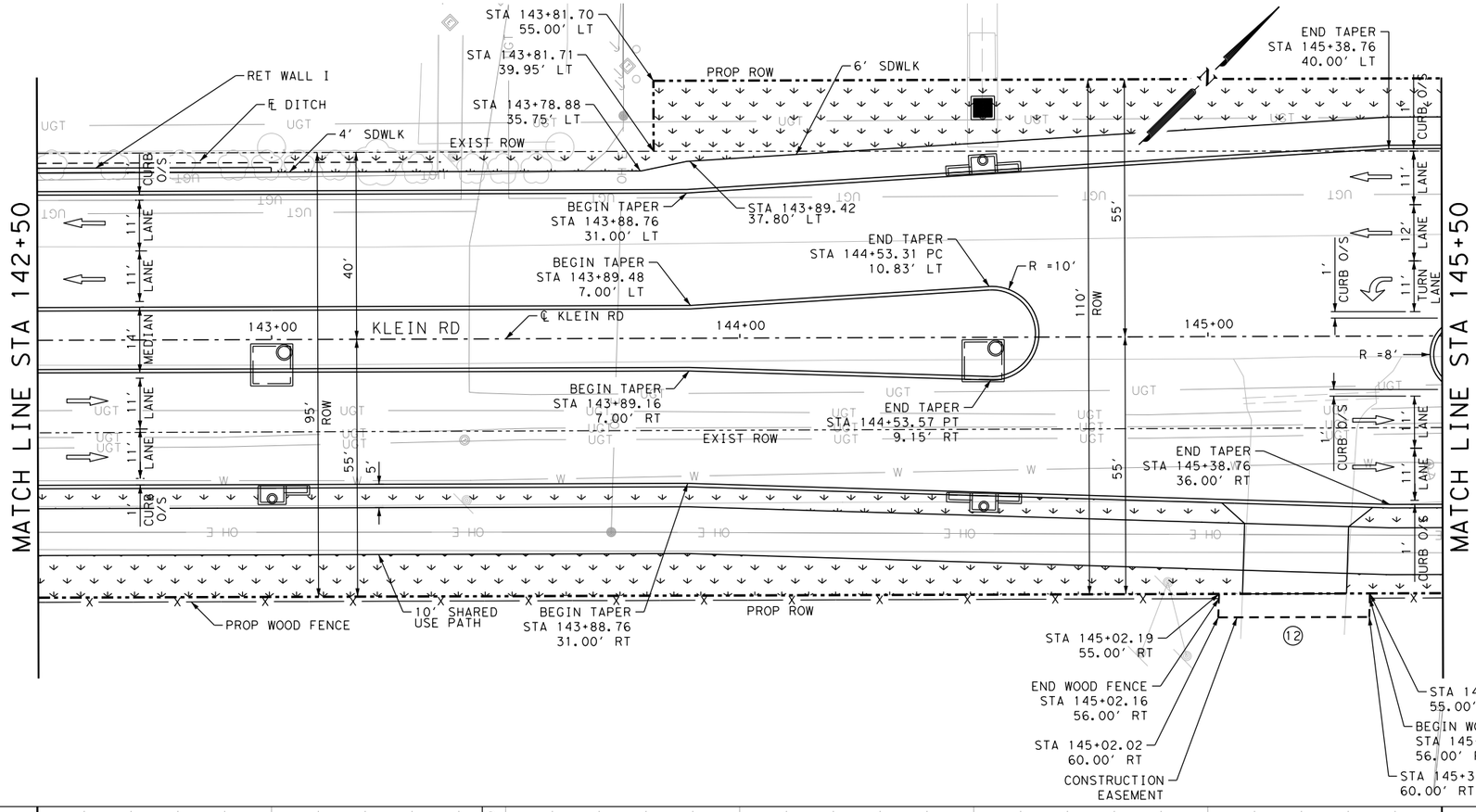

ITEM	DESCRIPTION	UNIT	QTY
500.1	Concrete Curb	LF	601
0110-6001	EXCAVATION (ROADWAY)	CY	1571
0132-6005	EMBANKMENT (FINAL)(ORD COMP)(TY C)	CY	175
0160-6003	FURNISHING AND PLACING TOPSOIL (4")	SY	640
0162-6002	BLOCK SODDING	SY	640
0168-6001	VEGETATIVE WATERING	MG	10.00
0247-6041	FL BS (CMP IN PLC)(TYA GR1&2)(FNAL POS)	CY	822
0260-6001	LIME (HYDRATED LIME (DRY))	TON	32.7
0260-6011	LIME TRT (EXST MATL) (12")	SY	2180
0310-6001	PRIME COAT (MULTI OPTION)	GAL	552.90
0341-6028	D-GR HMA TY-C PG70-22	TON	304.0
0341-6049	D-GR HMA TY-D PG76-22	TON	304.0
0341-6281	TACK COAT	GAL	368.60
0530-6004	DRIVEWAYS (CONC)	SY	50
0531-6001	CONC SIDEWALKS (4")	SY	449
0536-6002	CONC MEDIAN	SY	360
5001-6002	GEOGRID BASE REINFORCEMENT (TY II)	SY	2180
6210-XXXX	PVC MOISTURE BARRIER	SY	124

LEGEND

CURB INLET — SWALE/GRADING — MANHOLE
BLOCK SODDING — FIELD INLET — DROP INLET
TRAFFIC FLOW ARROW — DRIVEWAY NO.

NOTES

1. SEE HORIZONTAL ALIGNMENT DATA SHEETS FOR HORIZONTAL ALIGNMENT DATA.
2. SEE INTERSECTION LAYOUT SHEETS FOR INTERSECTION DETAILS.
3. SEE PAVEMENT MARKING SHEETS FOR STRIPING AND TRAFFIC FLOW DETAILS.
4. EXISTING FEATURES ARE SHOWN SCREENED BACK; i.e. FADED.
5. ALL DIMENSIONS ARE TO EDGE OF PAVEMENT, CENTER OF MARKING OR FACE OF CURB UNLESS OTHERWISE NOTED.
6. STRIPPING OF VEGETATION FROM PROJECT SITES SHALL BE PHASED SO AS TO EXPOSE THE MINIMUM AMOUNT OF AREA TO SOIL EROSION FOR THE SHORTEST POSSIBLE PERIOD OF TIME PER THE NEW BRAUNFELS DRAINAGE AND EROSION CONTROL DESIGN MANUAL SEC.12.2(N).

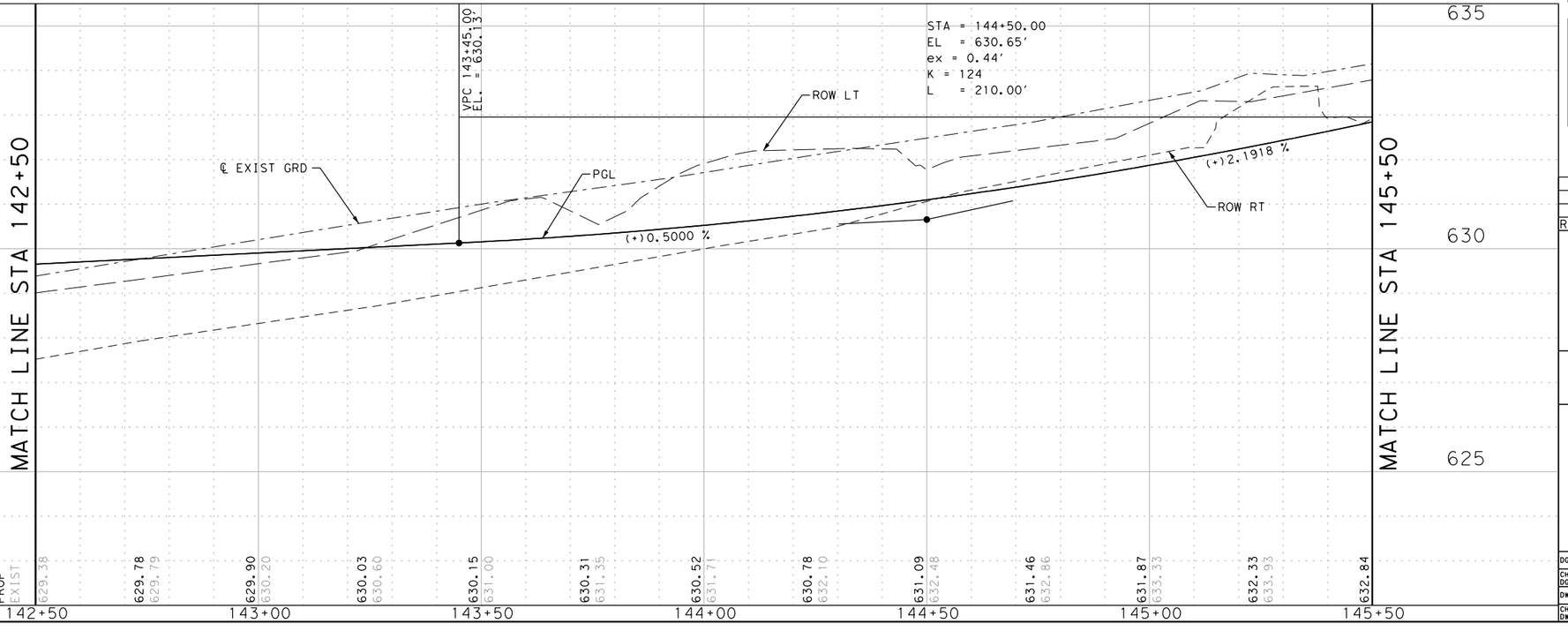

DESIGN

INTERIM REVIEW

DOCUMENT INCOMPLETE. NOT INTENDED FOR PERMIT, BIDDING OR CONSTRUCTION.
ENGINEER: TYLER PAYNE DUBE
P.E. SERIAL NO: 118612
DATE: 1/9/2020

APPROVAL

INTERIM REVIEW

DOCUMENT INCOMPLETE. NOT INTENDED FOR PERMIT, BIDDING OR CONSTRUCTION.
ENGINEER: JOHN A. TYLER
P.E. SERIAL NO: 105193
DATE: 1/9/2020

0 10 20 30 60

SCALE: PLAN 1":30' PROFILE 1":3'

REV. NO.	DATE	DESCRIPTION	BY

PAPE-DAWSON ENGINEERS
SAN ANTONIO | AUSTIN | HOUSTON | FORT WORTH | DALLAS
2000 NW LOOP 410 | SAN ANTONIO, TX 78213 | 210.375.9000
TBPE FIRM REGISTRATION #470 | TBPLS FIRM REGISTRATION #10028800

City of New Braunfels

KLEIN RD PHASE 2

ROADWAY PLAN & PROFILE

STA 142+50 TO STA 145+50

SHEET 15 OF 18

DGN:	STATE	PROJECT NO.	ROADWAY
CHK DGN:	TEXAS	NB 18-026	KLEIN RD
DWG:	COUNTY	CITY	SHEET NO.
CHK DWG:	GUADALUPE	NEW BRAUNFELS	131

Plotted on: 1/9/2020

Design Filename: H:\Projects\510\30\03\Design\Civil\Roadway\5103003pp15.dgn

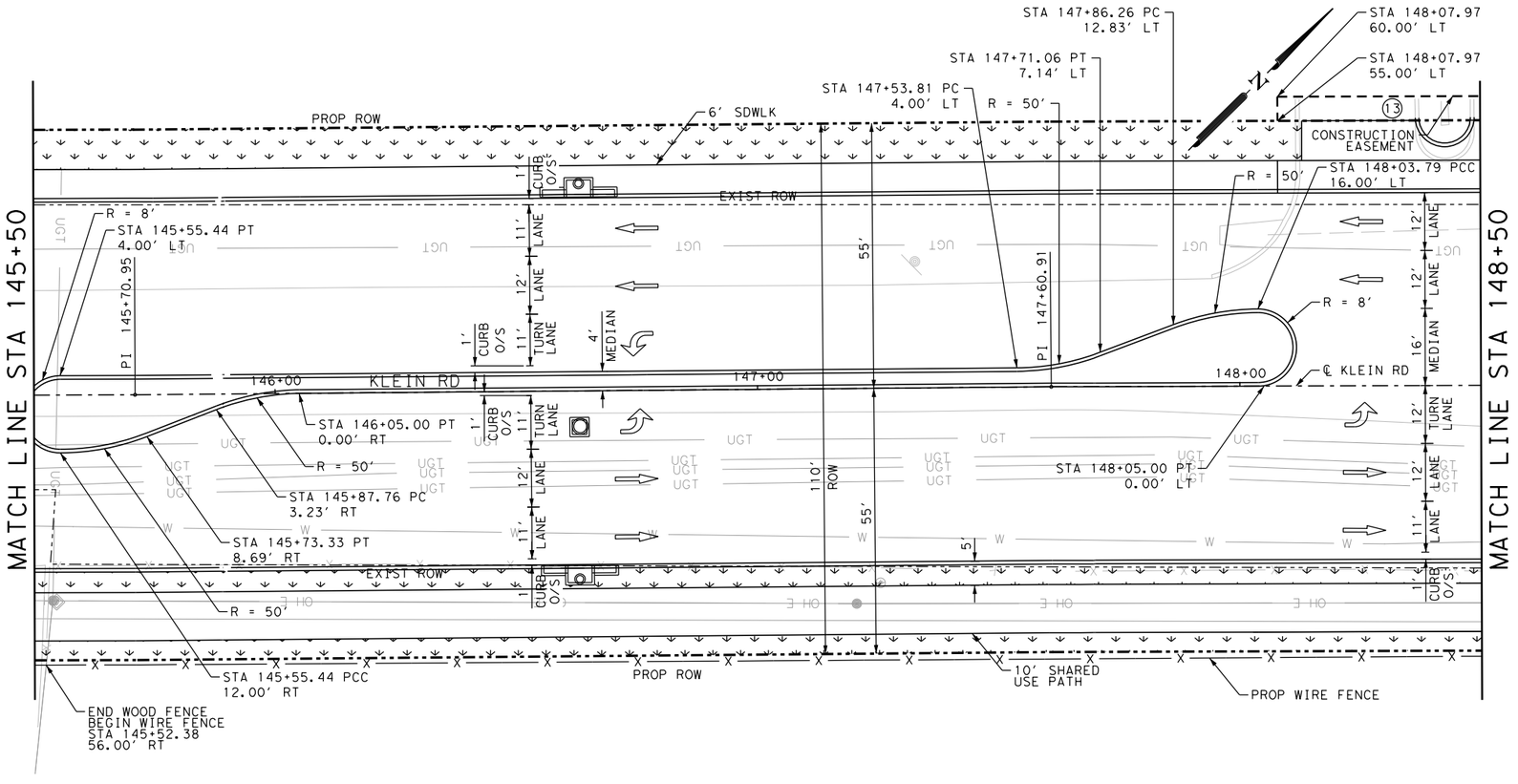

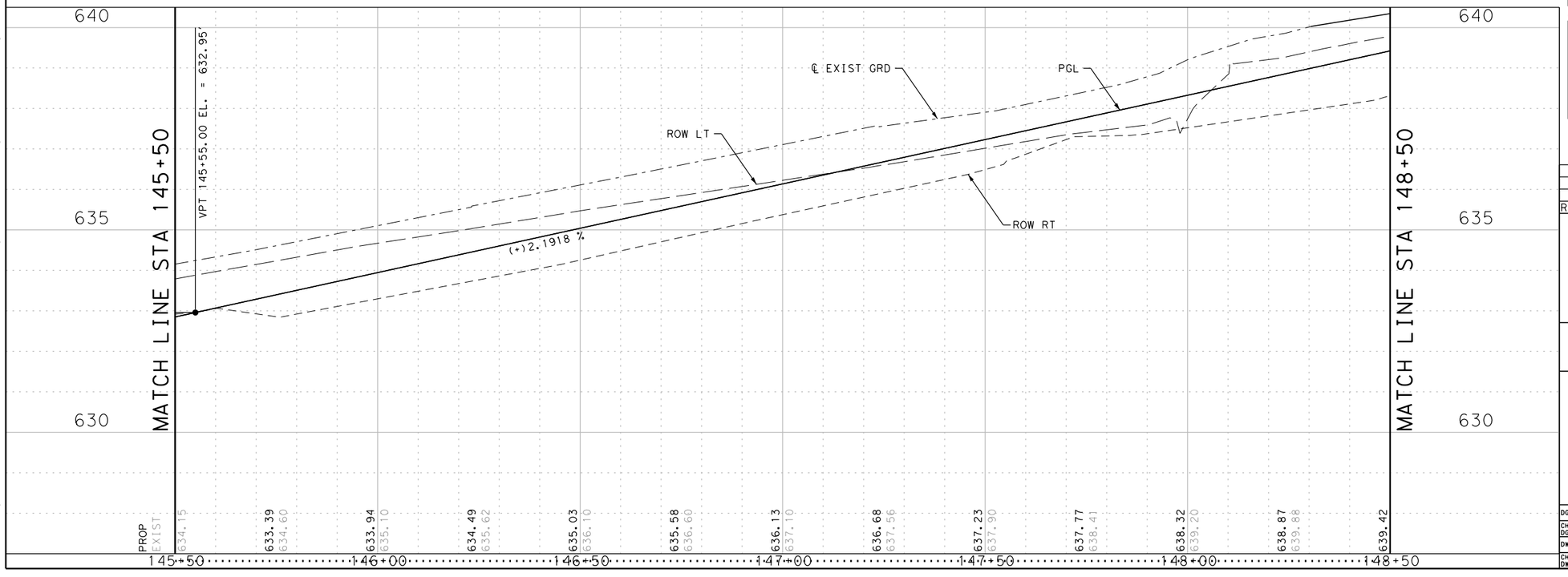

ITEM	DESCRIPTION	UNIT	QTY
500.1	Concrete Curb	LF	600
0110-6001	EXCAVATION (ROADWAY)	CY	1895
0132-6005	EMBANKMENT (FINAL)(ORD COMP)(TY C)	CY	72
0160-6003	FURNISHING AND PLACING TOPSOIL (4")	SY	505
0162-6002	BLOCK SODDING	SY	505
0168-6001	VEGETATIVE WATERING	MG	7.90
0247-6041	FL BS (CMP IN PLC)(TYA GR1&2)(FNAL POS)	CY	1019
0260-6001	LIME (HYDRATED LIME (DRY))	TON	40.1
0260-6011	LIME TRT (EXST MATL) (12")	SY	2670
0310-6001	PRIME COAT (MULTI OPTION)	GAL	700.80
0341-6028	D-GR HMA TY-C PG70-22	TON	385.0
0341-6049	D-GR HMA TY-D PG76-22	TON	385.0
0341-6281	TACK COAT	GAL	467.20
0530-6004	DRIVEWAYS (CONC)	SY	57
0531-6001	CONC SIDEWALKS (4")	SY	534
0536-6002	CONC MEDIAN	SY	198
5001-6002	GEOGRID BASE REINFORCEMENT (TY II)	SY	2670
6210-XXXX	PVC MOISTURE BARRIER	SY	124

LEGEND

CURB INLET
BLOCK SODDING
TRAFFIC FLOW ARROW
SWALE/GRADING
FIELD INLET
DRIVEWAY NO.
MANHOLE
DROP INLET

NOTES

1. SEE HORIZONTAL ALIGNMENT DATA SHEETS FOR HORIZONTAL ALIGNMENT DATA.
2. SEE INTERSECTION LAYOUT SHEETS FOR INTERSECTION DETAILS.
3. SEE PAVEMENT MARKING SHEETS FOR STRIPING AND TRAFFIC FLOW DETAILS.
4. EXISTING FEATURES ARE SHOWN SCREENED BACK; i.e. FADED.
5. ALL DIMENSIONS ARE TO EDGE OF PAVEMENT, CENTER OF MARKING OR FACE OF CURB UNLESS OTHERWISE NOTED.
6. STRIPPING OF VEGETATION FROM PROJECT SITES SHALL BE PHASED SO AS TO EXPOSE THE MINIMUM AMOUNT OF AREA TO SOIL EROSION FOR THE SHORTEST POSSIBLE PERIOD OF TIME PER THE NEW BRAUNFELS DRAINAGE AND EROSION CONTROL DESIGN MANUAL SEC.12.2(N).

DESIGN

INTERIM REVIEW
DOCUMENT INCOMPLETE. NOT INTENDED FOR PERMIT, BIDDING OR CONSTRUCTION.
ENGINEER: TYLER PAYNE DUBE
P.E. SERIAL NO: 118612
DATE: 1/9/2020

APPROVAL

INTERIM REVIEW
DOCUMENT INCOMPLETE. NOT INTENDED FOR PERMIT, BIDDING OR CONSTRUCTION.
ENGINEER: JOHN A. TYLER
P.E. SERIAL NO: 105193
DATE: 1/9/2020

0 10 20 30 60

SCALE: PLAN 1":30' PROFILE 1":3'

REV. NO.	DATE	DESCRIPTION	BY

PAPE-DAWSON ENGINEERS
SAN ANTONIO | AUSTIN | HOUSTON | FORT WORTH | DALLAS
2000 NW LOOP 410 | SAN ANTONIO, TX 78213 | 210.375.9000
TBPE FIRM REGISTRATION #470 | TBPLS FIRM REGISTRATION #10028800

City of New Braunfels

KLEIN RD PHASE 2

ROADWAY PLAN & PROFILE

STA 145+50 TO STA 148+50

SHEET 16 OF 18

DGN:	STATE	PROJECT NO.	ROADWAY
CHK DGN:	TEXAS	NB 18-026	KLEIN RD
DWG:	COUNTY	CITY	SHEET NO.
CHK DWG:	GUADALUPE	NEW BRAUNFELS	132

Plotted on: 1/9/2020

Design Filename: H:\Projects\510\30\03\Design\Civil\Roadway\5103003pp16.dgn

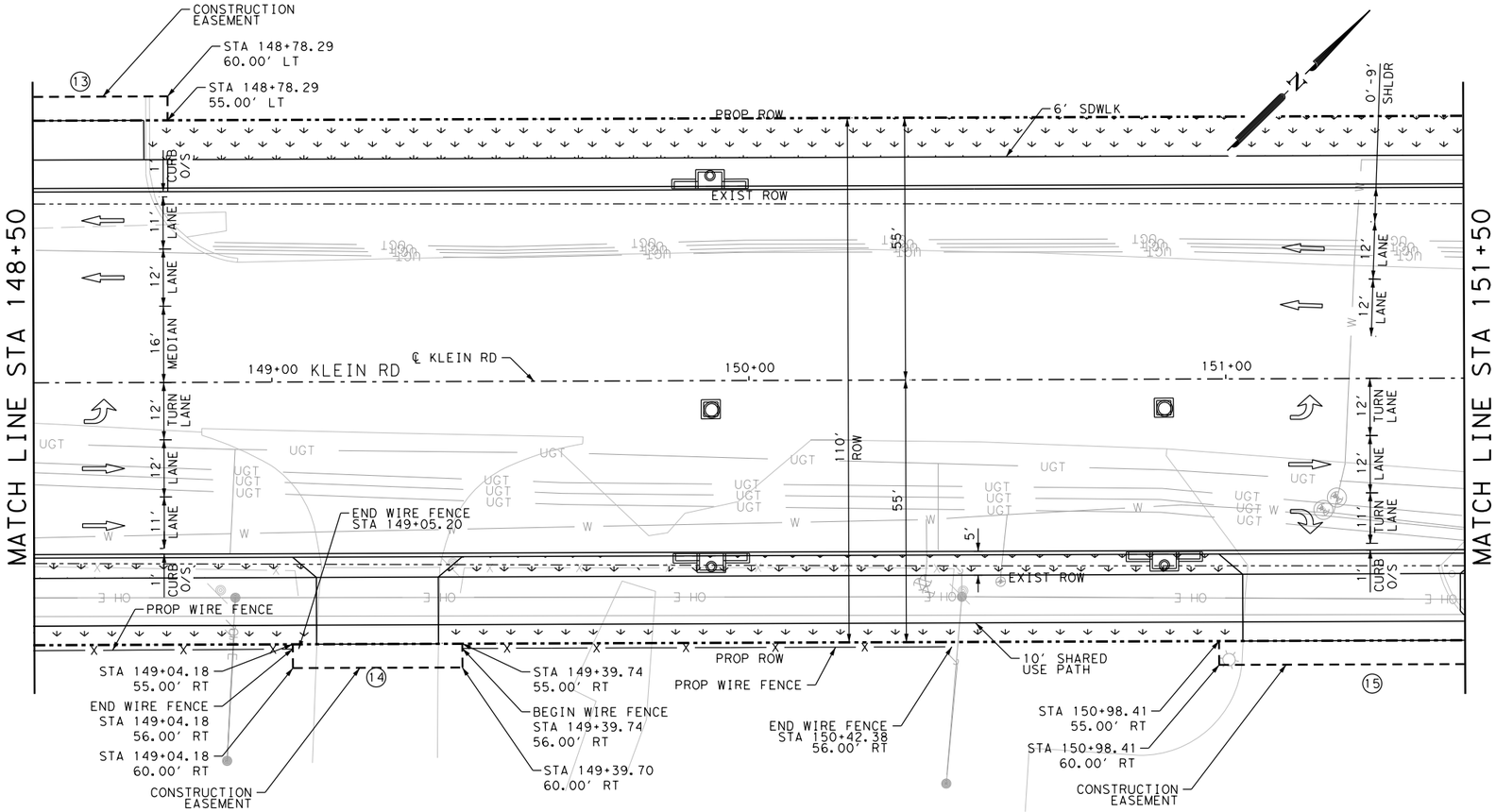

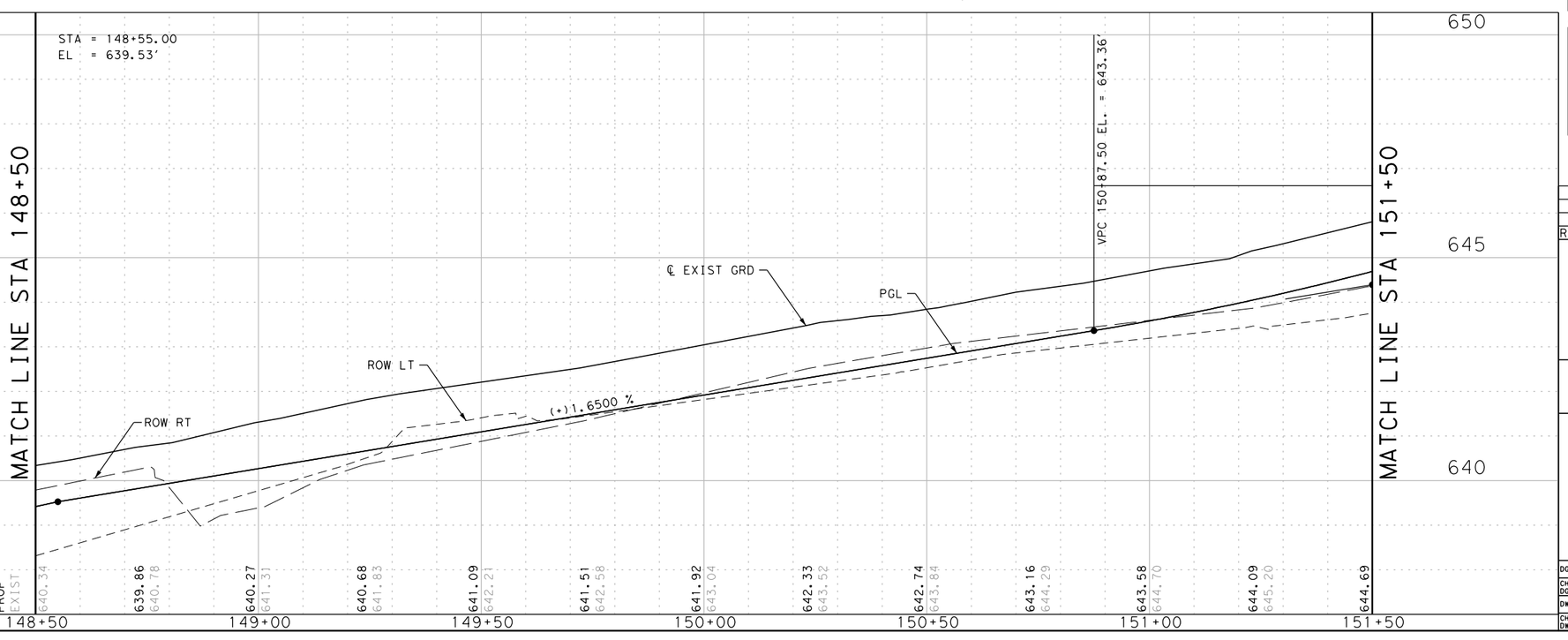

ITEM	DESCRIPTION	UNIT	QTY
500.1	Concrete Curb	LF	600
0110-6001	EXCAVATION (ROADWAY)	CY	2401
0132-6005	EMBANKMENT (FINAL)(ORD COMP)(TY C)	CY	13
0160-6003	FURNISHING AND PLACING TOPSOIL (4")	SY	440
0162-6002	BLOCK SODDING	SY	440
0168-6001	VEGETATIVE WATERING	MG	6.90
0247-6041	FL BS (CMP IN PLC)(TYA GR1&2)(FNAL POS)	CY	1046
0260-6001	LIME (HYDRATED LIME (DRY))	TON	40.9
0260-6011	LIME TRT (EXST MATL) (12")	SY	2728
0310-6001	PRIME COAT (MULTI OPTION)	GAL	760.20
0341-6028	D-GR HMA TY-C PG70-22	TON	418.0
0341-6049	D-GR HMA TY-D PG76-22	TON	418.0
0341-6281	TACK COAT	GAL	506.80
0530-6004	DRIVEWAYS (CONC)	SY	194
0531-6001	CONC SIDEWALKS (4")	SY	454
5001-6002	GEOGRID BASE REINFORCEMENT (TY II)	SY	2728
6210-XXXX	PVC MOISTURE BARRIER	SY	124

LEGEND

CURB INLET — SWALE/GRADING — MANHOLE
BLOCK SODDING — FIELD INLET — DROP INLET
TRAFFIC FLOW ARROW — (#) DRIVEWAY NO.

NOTES

1. SEE HORIZONTAL ALIGNMENT DATA SHEETS FOR HORIZONTAL ALIGNMENT DATA.
2. SEE INTERSECTION LAYOUT SHEETS FOR INTERSECTION DETAILS.
3. SEE PAVEMENT MARKING SHEETS FOR STRIPING AND TRAFFIC FLOW DETAILS.
4. EXISTING FEATURES ARE SHOWN SCREENED BACK; i.e. FADED.
5. ALL DIMENSIONS ARE TO EDGE OF PAVEMENT, CENTER OF MARKING OR FACE OF CURB UNLESS OTHERWISE NOTED.
6. STRIPPING OF VEGETATION FROM PROJECT SITES SHALL BE PHASED SO AS TO EXPOSE THE MINIMUM AMOUNT OF AREA TO SOIL EROSION FOR THE SHORTEST POSSIBLE PERIOD OF TIME PER THE NEW BRAUNFELS DRAINAGE AND EROSION CONTROL DESIGN MANUAL SEC.12.2(N).

DESIGN

INTERIM REVIEW

DOCUMENT INCOMPLETE. NOT INTENDED FOR PERMIT, BIDDING OR CONSTRUCTION.
ENGINEER: TYLER PAYNE DUBE
P.E. SERIAL NO: 118612
DATE: 1/9/2020

APPROVAL

INTERIM REVIEW

DOCUMENT INCOMPLETE. NOT INTENDED FOR PERMIT, BIDDING OR CONSTRUCTION.
ENGINEER: JOHN A. TYLER
P.E. SERIAL NO: 105193
DATE: 1/9/2020

0 10 20 30 60

SCALE: PLAN 1":30' PROFILE 1":3'

REV. NO.	DATE	DESCRIPTION	BY

PAPE-DAWSON ENGINEERS
SAN ANTONIO | AUSTIN | HOUSTON | FORT WORTH | DALLAS
2000 NW LOOP 410 | SAN ANTONIO, TX 78213 | 210.375.9000
TBPE FIRM REGISTRATION #470 | TBPLS FIRM REGISTRATION #10028800

City of New Braunfels

KLEIN RD PHASE 2

ROADWAY PLAN & PROFILE

STA 148+50 TO STA 151+50

SHEET 17 OF 18

DGN:	STATE	PROJECT NO.	ROADWAY
CHK DGN:	TEXAS	NB 18-026	KLEIN RD
DWG:	COUNTY	CITY	SHEET NO.
CHK DWG:	GUADALUPE	NEW BRAUNFELS	133

Plotted on: 1/9/2020

Design Filename: H:\Projects\510\30\03\Design\Civil\Roadway\5103003pp17.dgn

Plotted on: 1/9/2020

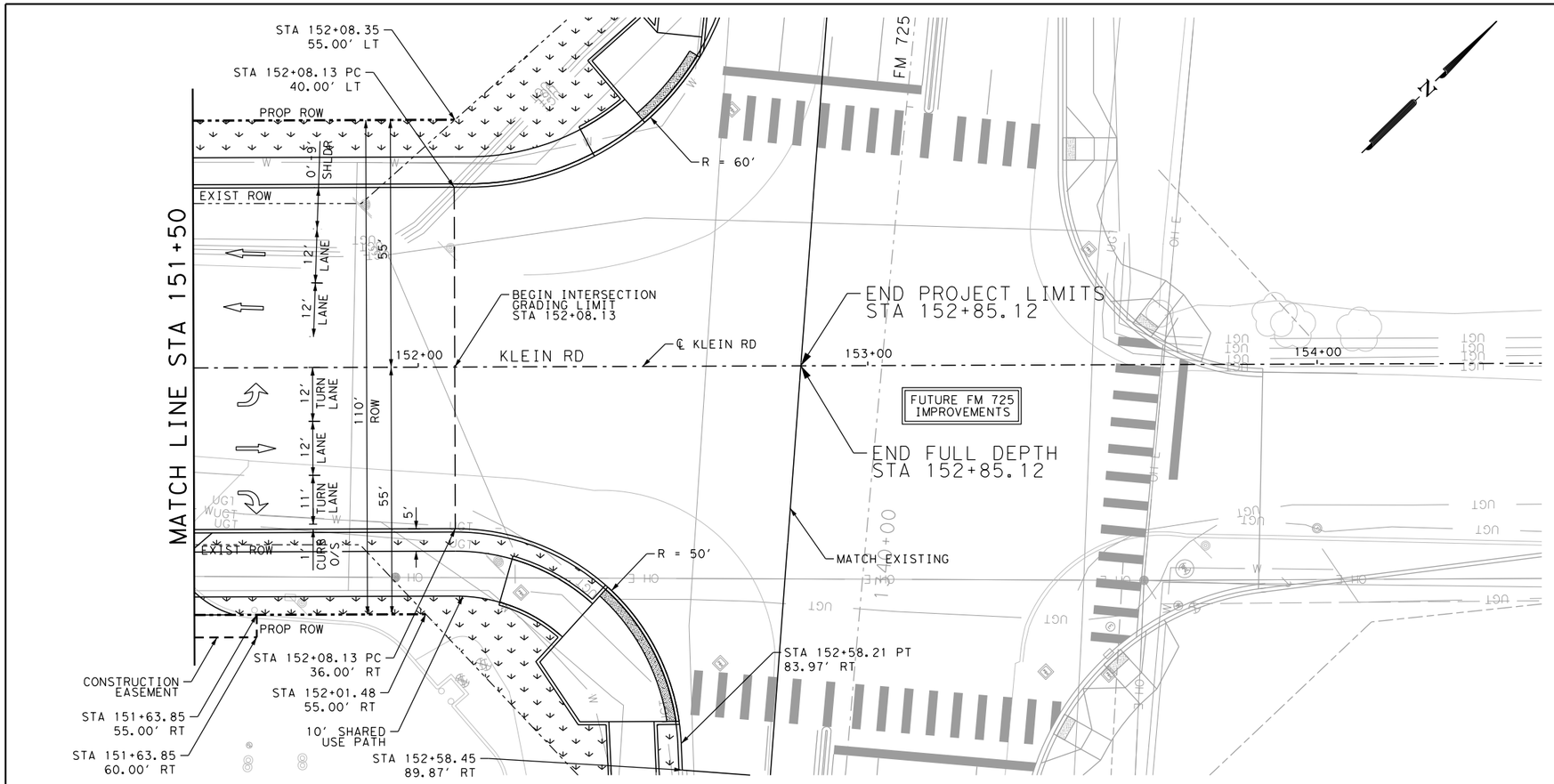

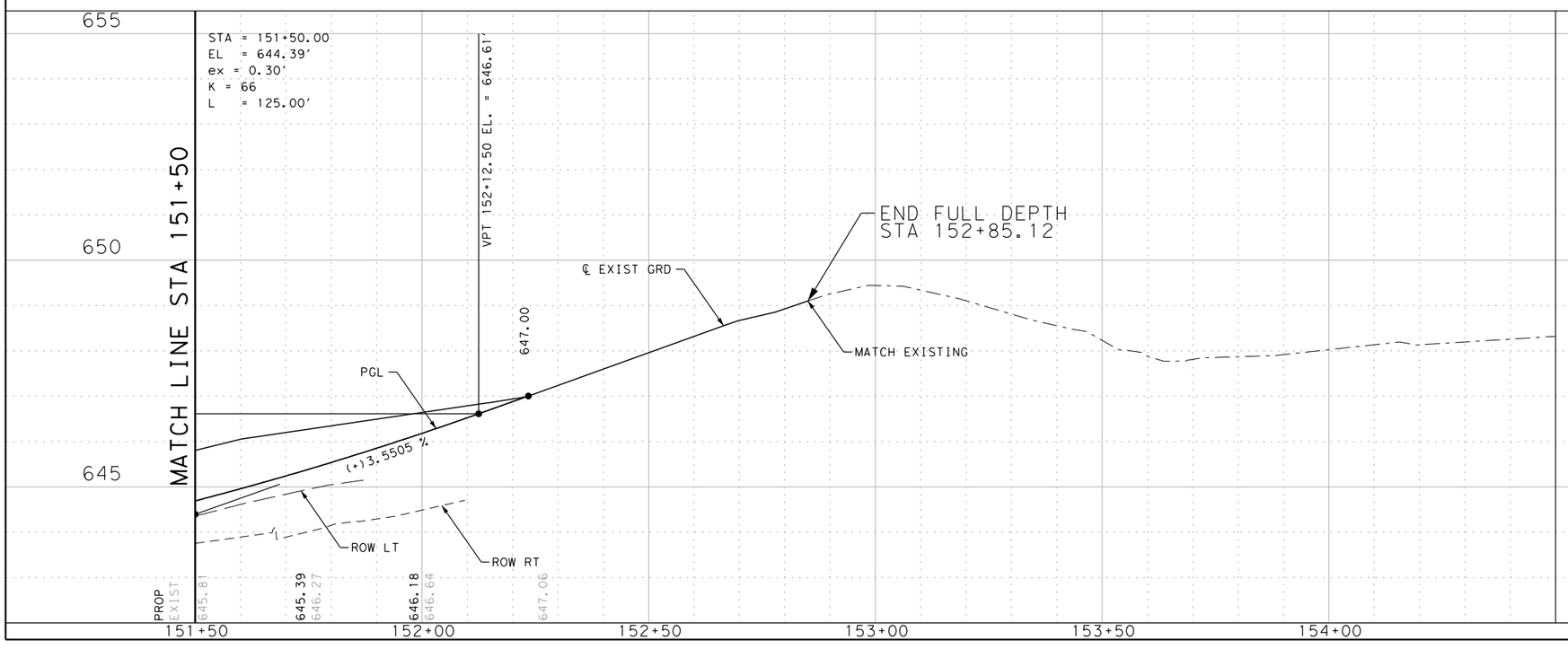

ITEM	DESCRIPTION	UNIT	QTY
500.1	Concrete Curb	LF	291
0132-6005	EMBANKMENT (FINAL)(ORD COMP)(TY C)	CY	24
0160-6003	FURNISHING AND PLACING TOPSOIL (4")	SY	360
0162-6002	BLOCK SODDING	SY	360
0168-6001	VEGETATIVE WATERING	MG	5.70
0247-6041	FL BS (CMP IN PLC)(TYA GR1&2)(FNAL POS)	CY	624
0260-6001	LIME (HYDRATED LIME (DRY))	TON	24.4
0260-6011	LIME TRT (EXST MATL) (12")	SY	1623
0310-6001	PRIME COAT (MULTI OPTION)	GAL	459.00
0341-6028	D-GR HMA TY-C PG70-22	TON	252.0
0341-6049	D-GR HMA TY-D PG76-22	TON	252.0
0341-6281	TACK COAT	GAL	306.00
0531-6001	CONC SIDEWALKS (4")	SY	235
0531-6010	CURB RAMPS (TY 7)	EA	4
5001-6002	GEOGRID BASE REINFORCEMENT (TY II)	SY	1623
6210-XXXX	PVC MOISTURE BARRIER	SY	58

LEGEND

CURB INLET — SWALE/GRADING — MANHOLE
BLOCK SODDING — FIELD INLET — DROP INLET
TRAFFIC FLOW ARROW — DRIVEWAY NO.

NOTES

1. SEE HORIZONTAL ALIGNMENT DATA SHEETS FOR HORIZONTAL ALIGNMENT DATA.
2. SEE INTERSECTION LAYOUT SHEETS FOR INTERSECTION DETAILS.
3. SEE PAVEMENT MARKING SHEETS FOR STRIPING AND TRAFFIC FLOW DETAILS.
4. EXISTING FEATURES ARE SHOWN SCREENED BACK; i.e. FADED.
5. ALL DIMENSIONS ARE TO EDGE OF PAVEMENT, CENTER OF MARKING OR FACE OF CURB UNLESS OTHERWISE NOTED.
6. STRIPPING OF VEGETATION FROM PROJECT SITES SHALL BE PHASED SO AS TO EXPOSE THE MINIMUM AMOUNT OF AREA TO SOIL EROSION FOR THE SHORTEST POSSIBLE PERIOD OF TIME PER THE NEW BRAUNFELS DRAINAGE AND EROSION CONTROL DESIGN MANUAL SEC.12.2(N).

DESIGN

INTERIM REVIEW
DOCUMENT INCOMPLETE. NOT INTENDED FOR PERMIT, BIDDING OR CONSTRUCTION.
ENGINEER: TYLER PAYNE DUBE
P.E. SERIAL NO: 118612
DATE: 1/9/2020

APPROVAL

INTERIM REVIEW
DOCUMENT INCOMPLETE. NOT INTENDED FOR PERMIT, BIDDING OR CONSTRUCTION.
ENGINEER: JOHN A. TYLER
P.E. SERIAL NO: 105193
DATE: 1/9/2020

0 10 20 30 60

SCALE: PLAN 1": 30' PROFILE 1": 3'

REV. NO.	DATE	DESCRIPTION	BY

PAPE-DAWSON ENGINEERS
SAN ANTONIO | AUSTIN | HOUSTON | FORT WORTH | DALLAS
2000 NW LOOP 410 | SAN ANTONIO, TX 78213 | 210.375.9000
TBPE FIRM REGISTRATION #470 | TBPLS FIRM REGISTRATION #10028800

City of New Braunfels

KLEIN RD PHASE 2

ROADWAY PLAN & PROFILE

STA 151+50 TO END PROJECT

SHEET 18 OF 18

DGN:	STATE	PROJECT NO.	ROADWAY
CHK DGN:	TEXAS	NB 18-026	KLEIN RD
DWG:	COUNTY	CITY	SHEET NO.
CHK DWG:	GUADALUPE	NEW BRAUNFELS	134

Design Filename: H:\Projects\510\30\03\Design\Civil\Roadway\5103003pp18.dgn

Plotted on: 1/9/2020

Design Filename: H:\Projects\510\30\03\Design\Civil\Roadway\5103003int01.dgn

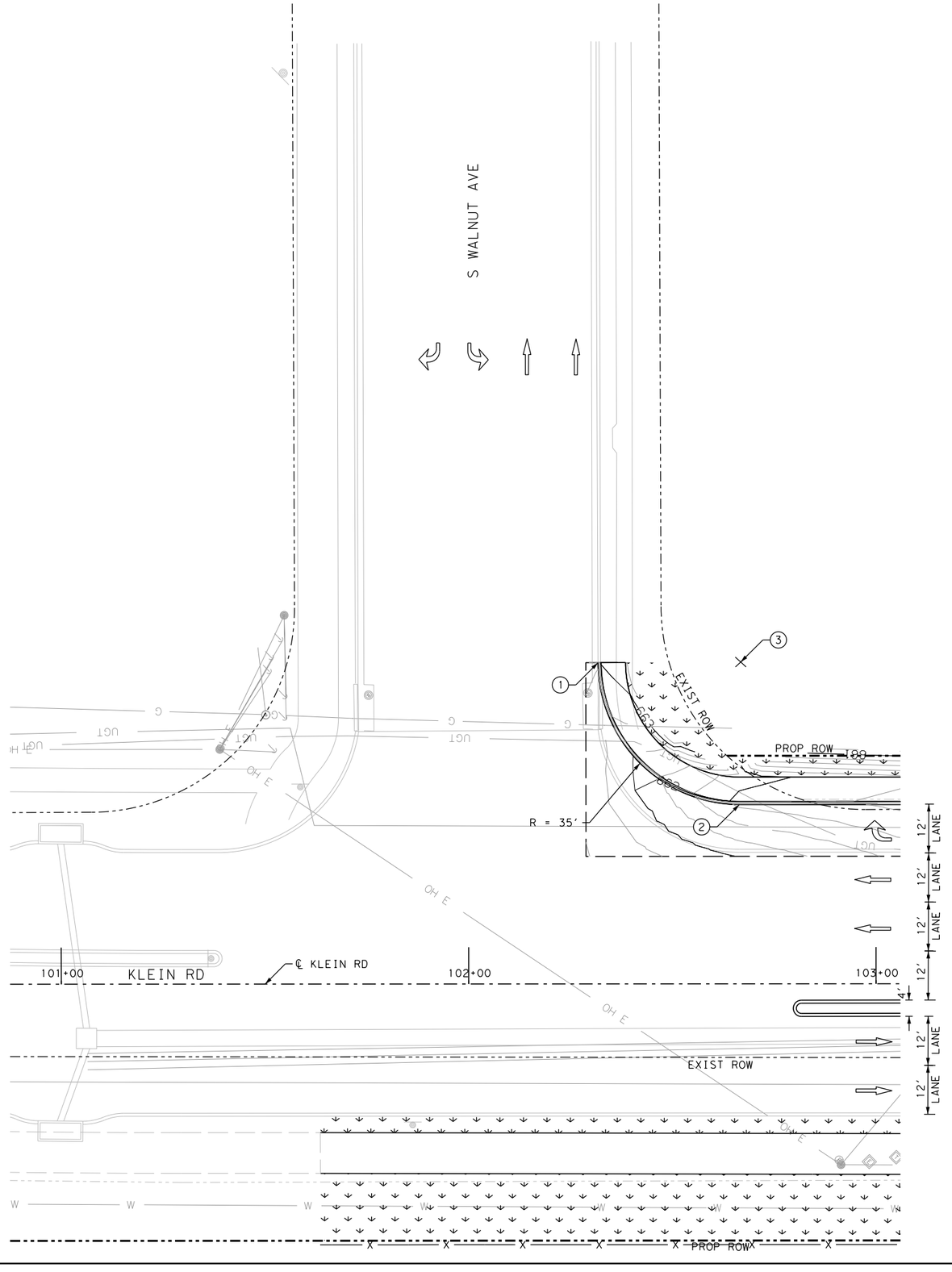

NOTES

1. SEE HORIZONTAL ALIGNMENT DATA SHEETS FOR HORIZONTAL ALIGNMENT DATA.
2. SEE INTERSECTION LAYOUT SHEETS FOR INTERSECTION DETAILS.
3. SEE PAVEMENT MARKING SHEETS FOR STRIPING AND TRAFFIC FLOW DETAILS.
4. EXISTING FEATURES ARE SHOWN SCREENED BACK; i.e. FADED.
5. ALL DIMENSIONS ARE TO EDGE OF PAVEMENT, CENTER OF MARKING OR FACE OF CURB UNLESS OTHERWISE NOTED.
6. STRIPPING OF VEGETATION FROM PROJECT SITES SHALL BE PHASED SO AS TO EXPOSE THE MINIMUM AMOUNT OF AREA TO SOIL EROSION FOR THE SHORTEST POSSIBLE PERIOD OF TIME PER THE NEW BRAUNFELS DRAINAGE AND EROSION CONTROL DESIGN MANUAL SEC.12.2(N).

Point #	Northing	Easting	Elev	Descrip
INT1901	13788698.32	2252768.35	662.6	PC
INT1902	13788698.82	2252817.52	661.4	PT
INT1903	13788723.48	2252792.68	Exist Grd	CENTER

DESIGN

INTERIM REVIEW

DOCUMENT INCOMPLETE. NOT INTENDED FOR PERMIT, BIDDING OR CONSTRUCTION.
ENGINEER: TYLER PAYNE DUBE
P.E. SERIAL NO: 118612
DATE: 1/9/2020

APPROVAL

INTERIM REVIEW

DOCUMENT INCOMPLETE. NOT INTENDED FOR PERMIT, BIDDING OR CONSTRUCTION.
ENGINEER: JOHN A. TYLER
P.E. SERIAL NO: 105193
DATE: 1/9/2020

0 10 20 30 60

SCALE: PLAN 1"= 30'

REV. NO.	DATE	DESCRIPTION	BY

PAPE-DAWSON ENGINEERS
SAN ANTONIO | AUSTIN | HOUSTON | FORT WORTH | DALLAS
2000 NW LOOP 410 | SAN ANTONIO, TX 78213 | 210.375.9000
TBPE FIRM REGISTRATION #470 | TBPLS FIRM REGISTRATION #10028800

City of New Braunfels

KLEIN RD PHASE 2

INTERSECTION DETAIL

S WALNUT AVE

SHEET 1 OF 8

DGN:	STATE	PROJECT NO.	ROADWAY
CHK DGN:	TEXAS	NB 18-026	KLEIN RD
DWG:	COUNTY	CITY	SHEET NO.
CHK DWG:	GUADALUPE	NEW BRAUNFELS	135

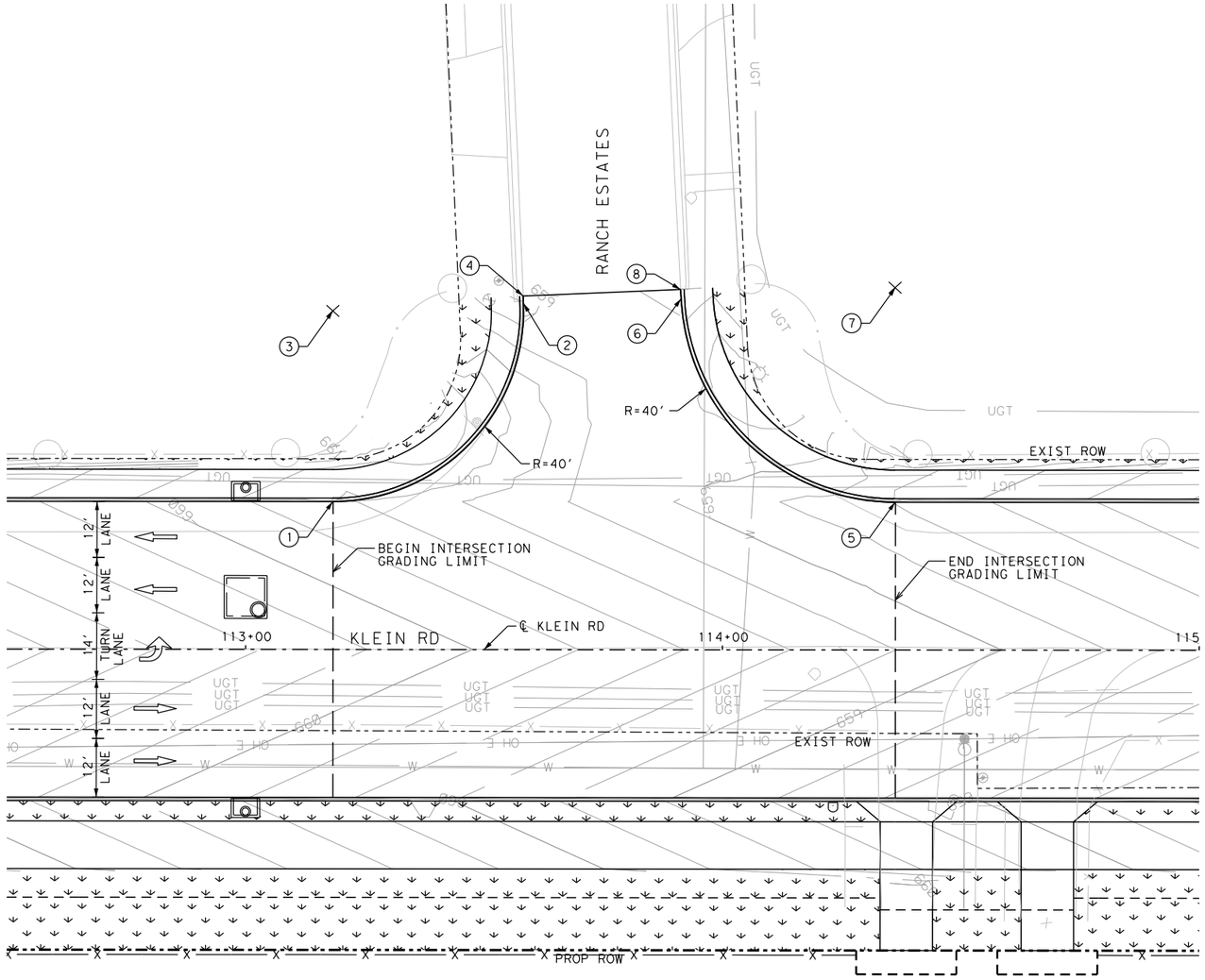

NOTES

1. SEE HORIZONTAL ALIGNMENT DATA SHEETS FOR HORIZONTAL ALIGNMENT DATA.
2. SEE INTERSECTION LAYOUT SHEETS FOR INTERSECTION DETAILS.
3. SEE PAVEMENT MARKING SHEETS FOR STRIPING AND TRAFFIC FLOW DETAILS.
4. EXISTING FEATURES ARE SHOWN SCREENED BACK; i.e. FADED.
5. ALL DIMENSIONS ARE TO EDGE OF PAVEMENT, CENTER OF MARKING OR FACE OF CURB UNLESS OTHERWISE NOTED.
6. STRIPPING OF VEGETATION FROM PROJECT SITES SHALL BE PHASED SO AS TO EXPOSE THE MINIMUM AMOUNT OF AREA TO SOIL EROSION FOR THE SHORTEST POSSIBLE PERIOD OF TIME PER THE NEW BRAUNFELS DRAINAGE AND EROSION CONTROL DESIGN MANUAL SEC.12.2(N).

Point #	Northing	Easting	Elev	Descrip
INT2001	13789440.68	2253563.37	659.8	PC
INT2002	13789498.36	2253561.53	658.85	PT
INT2003	13789468.64	2253534.76	Exist Grd	CENTER
INT2004	13789499.4	2253560.38	Exist Grd	
INT2005	13789525.03	2253645.8	658.59	PT
INT2006	13789522.69	2253583.9	659.19	PC
INT2007	13789556.48	2253613.62	Exist Grd	CENTER
INT2008	13789523.99	2253582.42	Exist Grd	

DESIGN

INTERIM REVIEW

DOCUMENT INCOMPLETE. NOT INTENDED FOR PERMIT, BIDDING OR CONSTRUCTION.
ENGINEER: TYLER PAYNE DUBE
P.E. SERIAL NO: 118612
DATE: 1/9/2020

APPROVAL

INTERIM REVIEW

DOCUMENT INCOMPLETE. NOT INTENDED FOR PERMIT, BIDDING OR CONSTRUCTION.
ENGINEER: JOHN A. TYLER
P.E. SERIAL NO: 105193
DATE: 1/9/2020

0 10 20 30 60

SCALE: PLAN 1"= 30'

REV. NO.	DATE	DESCRIPTION	BY

PAPE-DAWSON ENGINEERS
SAN ANTONIO | AUSTIN | HOUSTON | FORT WORTH | DALLAS
2000 NW LOOP 410 | SAN ANTONIO, TX 78213 | 210.375.9000
TBPE FIRM REGISTRATION #470 | TBPLS FIRM REGISTRATION #10028800

City of New Braunfels

KLEIN RD PHASE 2

INTERSECTION DETAIL

RANCH ESTATES

SHEET 2 OF 8

DGN:	STATE	PROJECT NO.	ROADWAY
CHK DGN:	TEXAS	NB 18-026	KLEIN RD
DWG:	COUNTY	CITY	SHEET NO.
CHK DWG:	GUADALUPE	NEW BRAUNFELS	136

Plotted on: 1/9/2020

Design Filename: H:\Projects\510\30\03\Design\Civil\Roadway\51030003int02.dgn

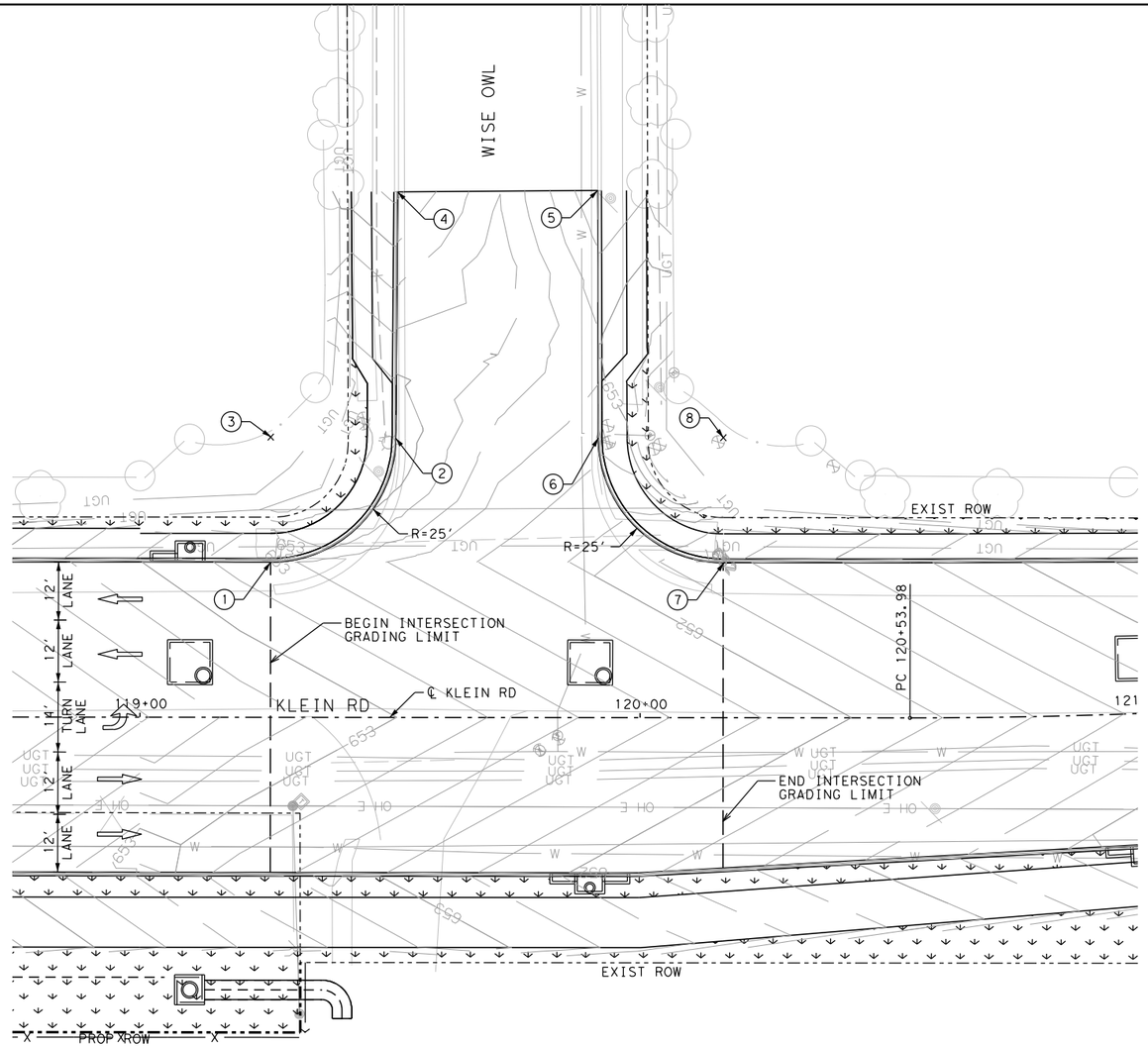

NOTES

1. SEE HORIZONTAL ALIGNMENT DATA SHEETS FOR HORIZONTAL ALIGNMENT DATA.
2. SEE INTERSECTION LAYOUT SHEETS FOR INTERSECTION DETAILS.
3. SEE PAVEMENT MARKING SHEETS FOR STRIPING AND TRAFFIC FLOW DETAILS.
4. EXISTING FEATURES ARE SHOWN SCREENED BACK; i.e. FADED.
5. ALL DIMENSIONS ARE TO EDGE OF PAVEMENT, CENTER OF MARKING OR FACE OF CURB UNLESS OTHERWISE NOTED.
6. STRIPPING OF VEGETATION FROM PROJECT SITES SHALL BE PHASED SO AS TO EXPOSE THE MINIMUM AMOUNT OF AREA TO SOIL EROSION FOR THE SHORTEST POSSIBLE PERIOD OF TIME PER THE NEW BRAUNFELS DRAINAGE AND EROSION CONTROL DESIGN MANUAL SEC.12.2(N).

DESIGN

INTERIM REVIEW
DOCUMENT INCOMPLETE. NOT INTENDED FOR PERMIT, BIDDING OR CONSTRUCTION.
ENGINEER: TYLER PAYNE DUBE
P.E. SERIAL NO: 118612
DATE: 1/9/2020

APPROVAL

INTERIM REVIEW
DOCUMENT INCOMPLETE. NOT INTENDED FOR PERMIT, BIDDING OR CONSTRUCTION.
ENGINEER: JOHN A. TYLER
P.E. SERIAL NO: 105193
DATE: 1/9/2020

0 10 20 30 60

SCALE: PLAN 1"= 30'

Point #	Northing	Easting	Elev	Descrip
INT2101	13789875.43	2253988.23	652.8	PC
INT2102	13789910.67	2253987.94	653.2	PT
INT2103	13789892.9	2253970.35	Exist Grd	CENTER
INT2104	13789945.28	2253952.96	Exist Grd	
INT2105	13789974.13	2253980.68	Exist Grd	
INT2106	13789939.67	2254016.19	652.39	PC
INT2107	13789940.25	2254051.58	651.8	PT
INT2108	13789957.62	2254033.6	Exist Grd	CENTER

REV.NO.	DATE	DESCRIPTION	BY

PAPE-DAWSON ENGINEERS
SAN ANTONIO | AUSTIN | HOUSTON | FORT WORTH | DALLAS
2000 NW LOOP 410 | SAN ANTONIO, TX 78213 | 210.375.9000
TBPE FIRM REGISTRATION #470 | TBPLS FIRM REGISTRATION #10028800

City of New Braunfels

KLEIN RD PHASE 2

INTERSECTION DETAIL

WISE OWL

SHEET 3 OF 8

DGN:	STATE	PROJECT NO.	ROADWAY
CHK DGN:	TEXAS	NB 18-026	KLEIN RD
DWG:	COUNTY	CITY	SHEET NO.
CHK DWG:	GUADALUPE	NEW BRAUNFELS	137

Plotted on: 1/9/2020

Design Filename: H:\Projects\510\30\03\Design\Civil\Roadway\5103003int03.dgn

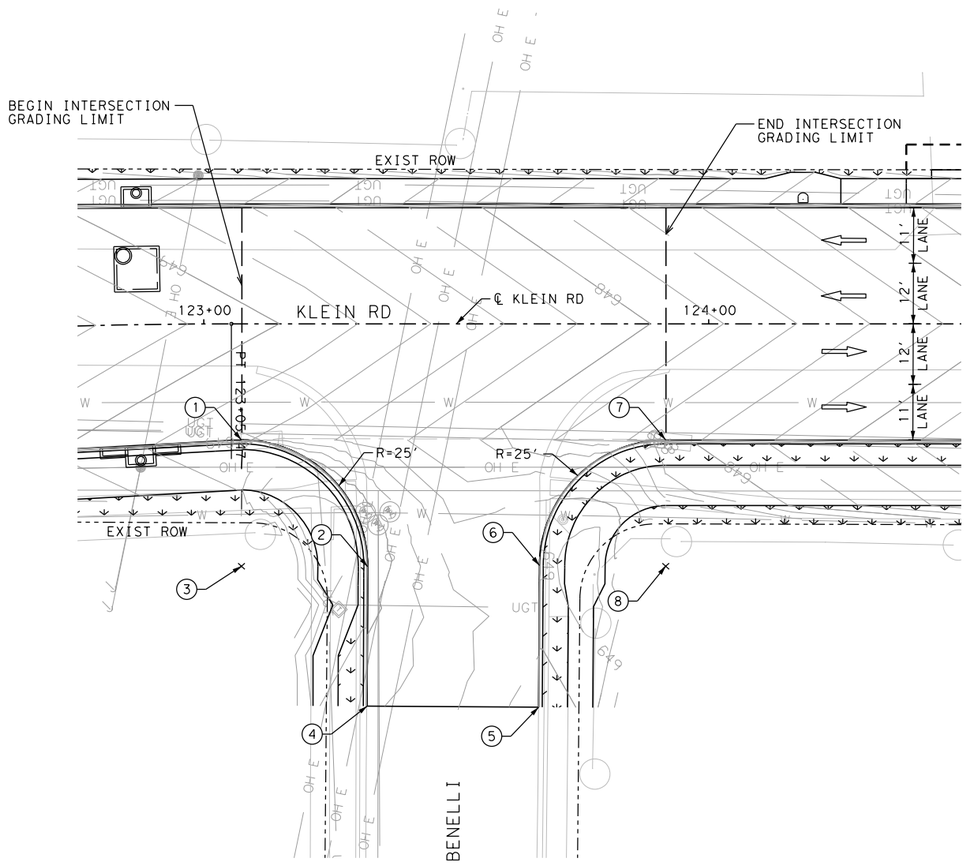

NOTES

1. SEE HORIZONTAL ALIGNMENT DATA SHEETS FOR HORIZONTAL ALIGNMENT DATA.
2. SEE INTERSECTION LAYOUT SHEETS FOR INTERSECTION DETAILS.
3. SEE PAVEMENT MARKING SHEETS FOR STRIPING AND TRAFFIC FLOW DETAILS.
4. EXISTING FEATURES ARE SHOWN SCREENED BACK; i.e. FADED.
5. ALL DIMENSIONS ARE TO EDGE OF PAVEMENT, CENTER OF MARKING OR FACE OF CURB UNLESS OTHERWISE NOTED.
6. STRIPPING OF VEGETATION FROM PROJECT SITES SHALL BE PHASED SO AS TO EXPOSE THE MINIMUM AMOUNT OF AREA TO SOIL EROSION FOR THE SHORTEST POSSIBLE PERIOD OF TIME PER THE NEW BRAUNFELS DRAINAGE AND EROSION CONTROL DESIGN MANUAL SEC.12.2(N).

DESIGN

INTERIM REVIEW

DOCUMENT INCOMPLETE. NOT INTENDED FOR PERMIT, BIDDING OR CONSTRUCTION.
ENGINEER: TYLER PAYNE DUBE
P.E. SERIAL NO: 118612
DATE: 1/9/2020

APPROVAL

INTERIM REVIEW

DOCUMENT INCOMPLETE. NOT INTENDED FOR PERMIT, BIDDING OR CONSTRUCTION.
ENGINEER: JOHN A. TYLER
P.E. SERIAL NO: 105193
DATE: 1/9/2020

0 10 20 30 60

SCALE: PLAN 1"= 30'

REV. NO.	DATE	DESCRIPTION	BY

Point #	Northing	Easting	Elev	Descrip
INT2201	13790116.83	2254286.56	648.8	PC
INT2202	13790117.22	2254321.96	649.2	PT
INT2203	13790099.37	2254304.45	Exist Grd	CENTER
INT2204	13790097.86	2254341.69	Exist Grd	
INT2205	13790122	2254365.53	Exist Grd	
INT2206	13790141.74	2254345.55	648.6	PC
INT2207	13790177.02	2254345.26	647.59	PT
INT2208	13790159.53	2254363.12	Exist Grd	CENTER

PAPE-DAWSON ENGINEERS
SAN ANTONIO | AUSTIN | HOUSTON | FORT WORTH | DALLAS
2000 NW LOOP 410 | SAN ANTONIO, TX 78213 | 210.375.9000
TBPE FIRM REGISTRATION #470 | TBPLS FIRM REGISTRATION #10028800

City of New Braunfels

KLEIN RD PHASE 2

INTERSECTION DETAIL

BENELLI

SHEET 4 OF 8

DGN:	STATE	PROJECT NO.	ROADWAY
CHK DGN:	TEXAS	NB 18-026	KLEIN RD
DWG:	COUNTY	CITY	SHEET NO.
CHK DWG:	GUADALUPE	NEW BRAUNFELS	138

Plotted on: 1/9/2020

Design Filename: H:\Projects\510\30\03\Design\Civil\Roadway\5103003int04.dgn

Plotted on: 1/9/2020

Design Filename: H:\Projects\510\30\03\Design\Civil\Roadway\5103003int05.dgn

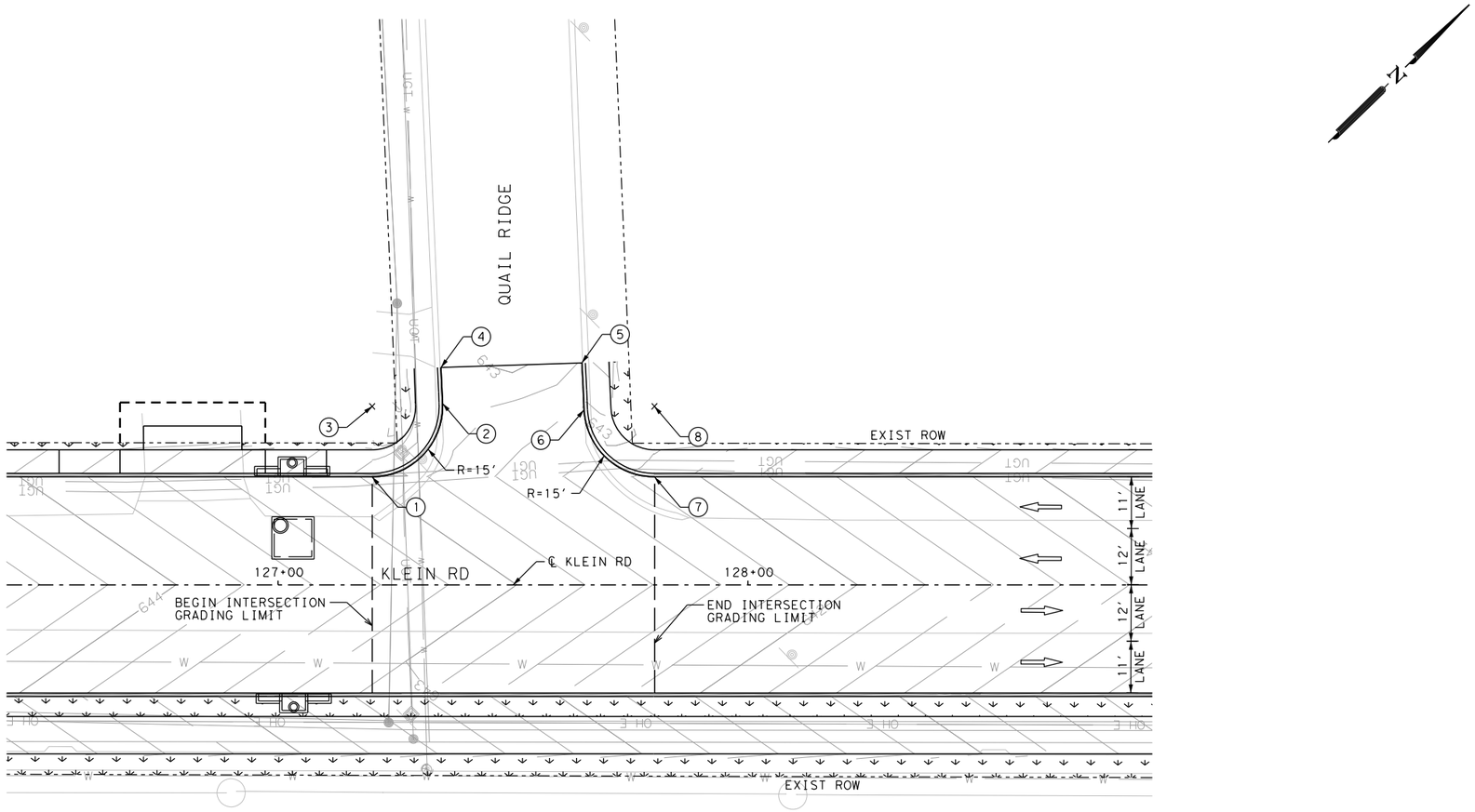

NOTES

1. SEE HORIZONTAL ALIGNMENT DATA SHEETS FOR HORIZONTAL ALIGNMENT DATA.
2. SEE INTERSECTION LAYOUT SHEETS FOR INTERSECTION DETAILS.
3. SEE PAVEMENT MARKING SHEETS FOR STRIPING AND TRAFFIC FLOW DETAILS.
4. EXISTING FEATURES ARE SHOWN SCREENED BACK; i.e. FADED.
5. ALL DIMENSIONS ARE TO EDGE OF PAVEMENT, CENTER OF MARKING OR FACE OF CURB UNLESS OTHERWISE NOTED.
6. STRIPPING OF VEGETATION FROM PROJECT SITES SHALL BE PHASED SO AS TO EXPOSE THE MINIMUM AMOUNT OF AREA TO SOIL EROSION FOR THE SHORTEST POSSIBLE PERIOD OF TIME PER THE NEW BRAUNFELS DRAINAGE AND EROSION CONTROL DESIGN MANUAL SEC.12.2(N).

DESIGN

INTERIM REVIEW

DOCUMENT INCOMPLETE. NOT INTENDED FOR PERMIT, BIDDING OR CONSTRUCTION.
ENGINEER: TYLER PAYNE DUBE
P.E. SERIAL NO: 118612
DATE: 1/9/2020

APPROVAL

INTERIM REVIEW

DOCUMENT INCOMPLETE. NOT INTENDED FOR PERMIT, BIDDING OR CONSTRUCTION.
ENGINEER: JOHN A. TYLER
P.E. SERIAL NO: 105193
DATE: 1/9/2020

0 10 20 30 60

SCALE: PLAN 1"= 30'

REV.NO.	DATE	DESCRIPTION	BY

PAPE-DAWSON ENGINEERS

SAN ANTONIO I AUSTIN I HOUSTON I FORT WORTH I DALLAS
2000 NW LOOP 410 I SAN ANTONIO, TX 78213 I 210.375.9000
TBPE FIRM REGISTRATION #470 I TBPLS FIRM REGISTRATION #10028800

City of New Braunfels

KLEIN RD PHASE 2

INTERSECTION DETAIL

QUAIL RIDGE

SHEET 5 OF 8

Point #	Northing	Easting	Elev	Descrip
INT2301	13790444.3	2254541.67	643	PC
INT2302	13790465.95	2254540.96	Exist Grd	PT
INT2303	13790454.78	2254530.94	Exist Grd	CENTER
INT2304	13790471.09	2254535.24	Exist Grd	
INT2305	13790493.18	2254555.49	Exist Grd	
INT2306	13790486.54	2254562.97	642.6	PC
INT2307	13790487.32	2254583.63	642.2	PT
INT2308	13790497.79	2254572.89	Exist Grd	CENTER

DGN:	STATE	PROJECT NO.	ROADWAY
CHK DGN:	TEXAS	NB 18-026	KLEIN RD
DWG:	COUNTY	CITY	SHEET NO.
CHK DWG:	GUADALUPE	NEW BRAUNFELS	139

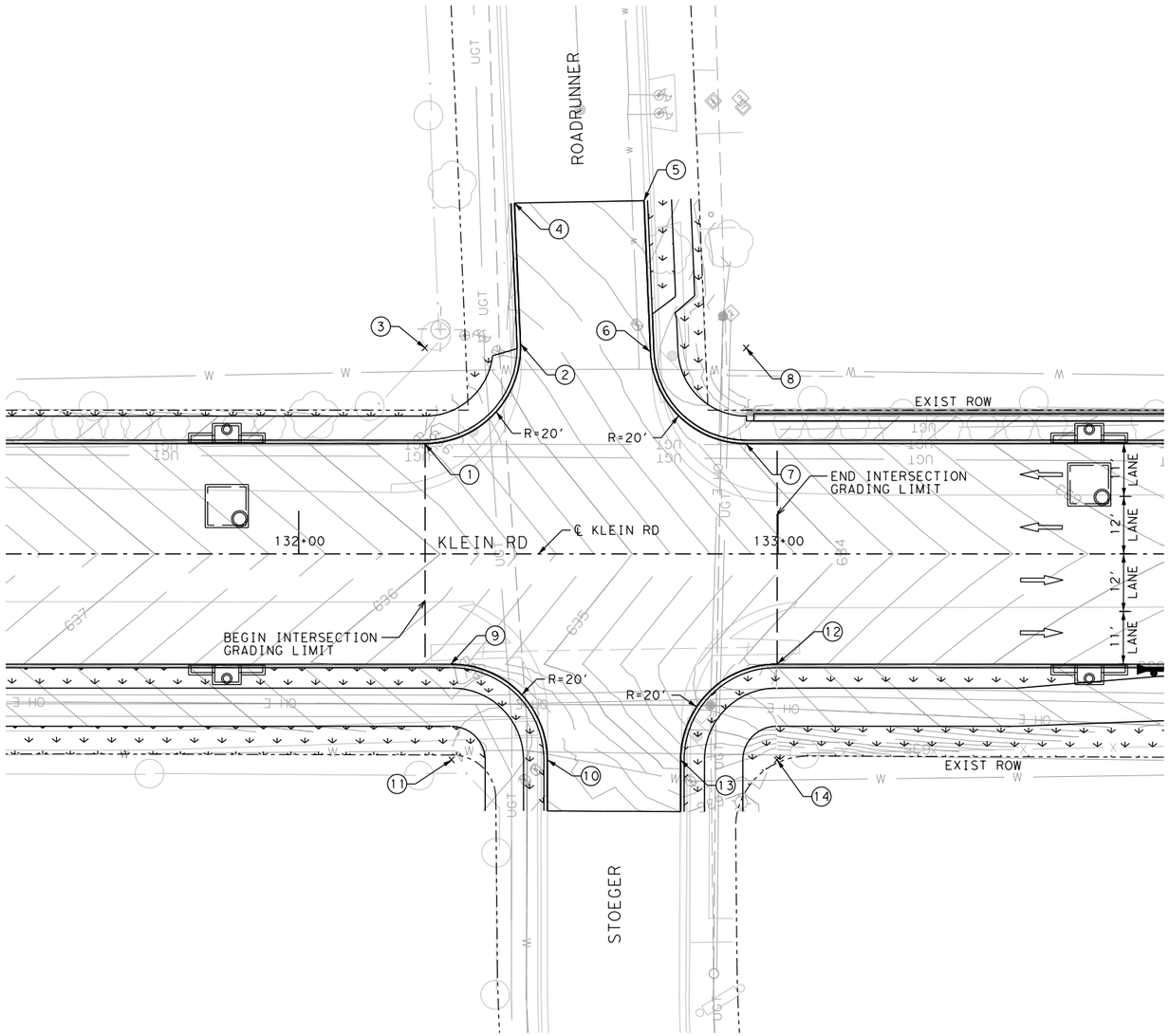

Point #	Northing	Easting	Elev	Descrip
INT2401	13790806.78	2254895.18	635.6	PC
INT2402	13790835.63	2254894.2	634.99	PT
INT2403	13790820.74	2254880.86	Exist Grd	CENTER
INT2404	13790855.25	2254872.32	Exist Grd	
INT2405	13790874.95	2254890.79	Exist Grd	
INT2406	13790853.85	2254914.33	634.33	PC
INT2407	13790854.78	2254942	634	PT
INT2408	13790868.75	2254927.68	Exist Grd	CENTER
INT2409	13790778.55	2254931.91	635.6	PC
INT2410	13790779.01	2254960.3	635.8	PT
INT2411	13790764.7	2254946.33	Exist Grd	CENTER
INT2412	13790827.29	2254979.43	633.8	PT
INT2413	13790798.92	2254979.7	634.98	PC
INT2414	13790813.32	2254993.75	635.69	CENTER

NOTES

1. SEE HORIZONTAL ALIGNMENT DATA SHEETS FOR HORIZONTAL ALIGNMENT DATA.
2. SEE INTERSECTION LAYOUT SHEETS FOR INTERSECTION DETAILS.
3. SEE PAVEMENT MARKING SHEETS FOR STRIPING AND TRAFFIC FLOW DETAILS.
4. EXISTING FEATURES ARE SHOWN SCREENED BACK; i.e. FADED.
5. ALL DIMENSIONS ARE TO EDGE OF PAVEMENT, CENTER OF MARKING OR FACE OF CURB UNLESS OTHERWISE NOTED.
6. STRIPPING OF VEGETATION FROM PROJECT SITES SHALL BE PHASED SO AS TO EXPOSE THE MINIMUM AMOUNT OF AREA TO SOIL EROSION FOR THE SHORTEST POSSIBLE PERIOD OF TIME PER THE NEW BRAUNFELS DRAINAGE AND EROSION CONTROL DESIGN MANUAL SEC.12.2(N).

DESIGN

INTERIM REVIEW

DOCUMENT INCOMPLETE. NOT INTENDED FOR PERMIT, BIDDING OR CONSTRUCTION.
ENGINEER: TYLER PAYNE DUBE
P.E. SERIAL NO: 118612
DATE: 1/9/2020

APPROVAL

INTERIM REVIEW

DOCUMENT INCOMPLETE. NOT INTENDED FOR PERMIT, BIDDING OR CONSTRUCTION.
ENGINEER: JOHN A. TYLER
P.E. SERIAL NO: 105193
DATE: 1/9/2020

0 10 20 30 60

SCALE: PLAN 1"= 30'

REV. NO.	DATE	DESCRIPTION	BY

PAPE-DAWSON ENGINEERS
SAN ANTONIO | AUSTIN | HOUSTON | FORT WORTH | DALLAS
2000 NW LOOP 410 | SAN ANTONIO, TX 78213 | 210.375.9000
TBPE FIRM REGISTRATION #470 | TBPLS FIRM REGISTRATION #10028800

City of New Braunfels

KLEIN RD PHASE 2

INTERSECTION DETAIL

ROADRUNNER/STOEGER

SHEET 6 OF 8

DGN:	STATE	PROJECT NO.	ROADWAY
CHK DGN:	TEXAS	NB 18-026	KLEIN RD
DWG:	COUNTY	CITY	SHEET NO.
CHK DWG:	GUADALUPE	NEW BRAUNFELS	140

Plotted on: 1/9/2020

Design Filename: H:\Projects\510\30\03\Design\Civil\Roadway\5103003int06.dgn

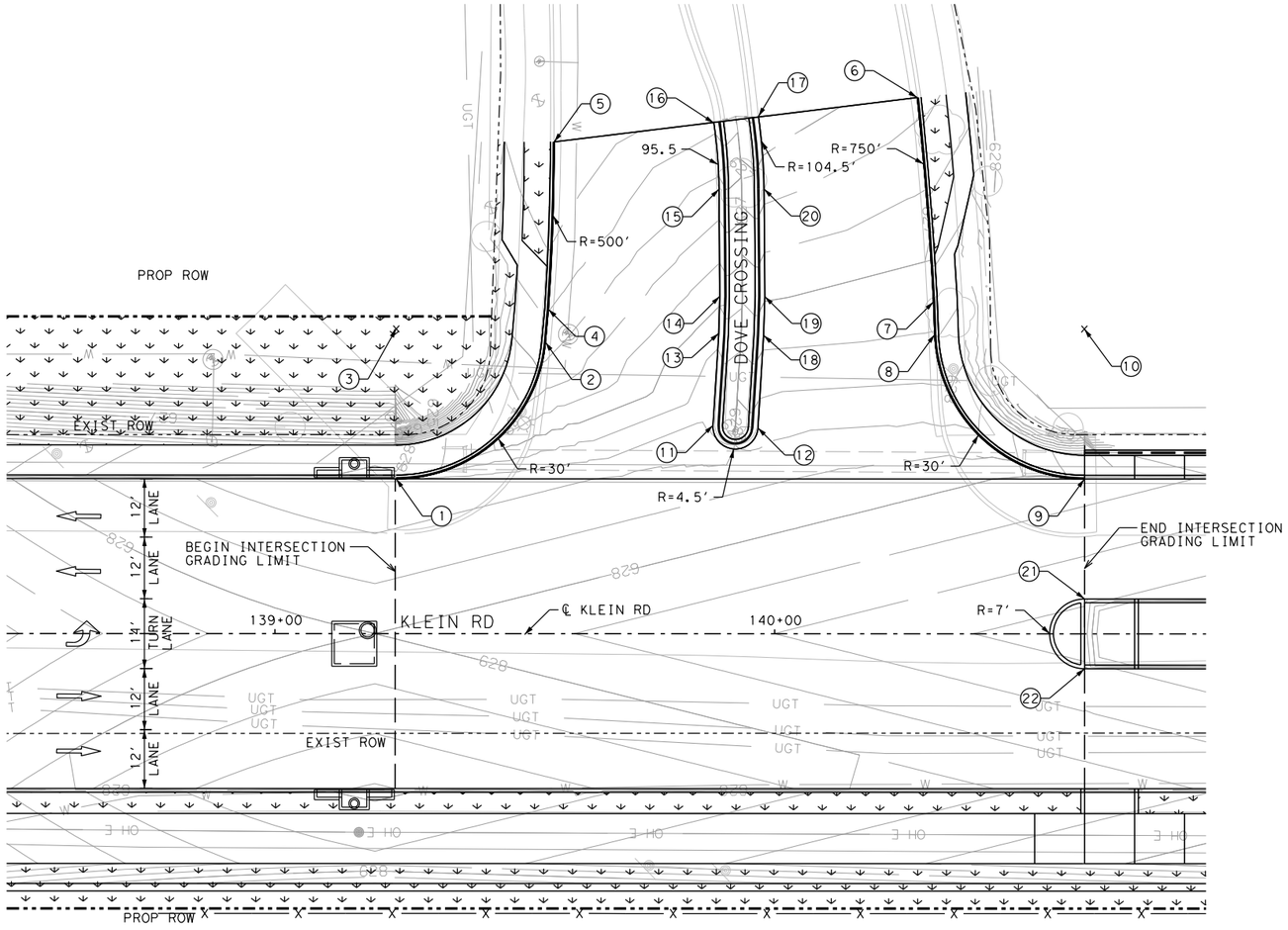

NOTES

1. SEE HORIZONTAL ALIGNMENT DATA SHEETS FOR HORIZONTAL ALIGNMENT DATA.
2. SEE INTERSECTION LAYOUT SHEETS FOR INTERSECTION DETAILS.
3. SEE PAVEMENT MARKING SHEETS FOR STRIPING AND TRAFFIC FLOW DETAILS.
4. EXISTING FEATURES ARE SHOWN SCREENED BACK; i.e. FADED.
5. ALL DIMENSIONS ARE TO EDGE OF PAVEMENT, CENTER OF MARKING OR FACE OF CURB UNLESS OTHERWISE NOTED.
6. STRIPPING OF VEGETATION FROM PROJECT SITES SHALL BE PHASED SO AS TO EXPOSE THE MINIMUM AMOUNT OF AREA TO SOIL EROSION FOR THE SHORTEST POSSIBLE PERIOD OF TIME PER THE NEW BRAUNFELS DRAINAGE AND EROSION CONTROL DESIGN MANUAL SEC.12.2(N).

DESIGN

INTERIM REVIEW

DOCUMENT INCOMPLETE. NOT INTENDED FOR PERMIT, BIDDING OR CONSTRUCTION.
ENGINEER: TYLER PAYNE DUBE
P.E. SERIAL NO: 118612
DATE: 1/9/2020

APPROVAL

INTERIM REVIEW

DOCUMENT INCOMPLETE. NOT INTENDED FOR PERMIT, BIDDING OR CONSTRUCTION.
ENGINEER: JOHN A. TYLER
P.E. SERIAL NO: 105193
DATE: 1/9/2020

0 10 20 30 60

SCALE: PLAN 1"= 30'

Point #	Northing	Easting	Elev	Descrip
INT2501	13791305.04	2255383.67	627.4	PC
INT2502	13791345.51	2255384.98	626.35	PT
INT2503	13791325.99	2255362.19	Exist Grd	CENTER
INT2504	13791350.56	2255380.65	626.2	PC
INT2505	13791374.76	2255357.5	Exist Grd	PT
INT2506	13791433.01	2255401.89	Exist Grd	PC
INT2507	13791406.79	2255433.41	627.2	PT
INT2508	13791402.39	2255438.25	627.39	PC
INT2509	13791403.65	2255479.89	628.2	PT
INT2510	13791424.6	2255458.41	Exist Grd	CENTER
INT2511	13791357.93	2255420.29	627.37	PC
INT2512	13791363.99	2255426.94	627.54	PT
INT2513	13791371.61	2255407.91	627.16	PI
INT2514	13791376.96	2255402.75	626.97	PI
INT2515	13791391.78	2255387.31	626.53	PT
INT2516	13791400.3	2255377.1	Exist Grd	PC
INT2517	13791407.59	2255382.38	Exist Grd	PT
INT2518	13791377.76	2255414.49	627.16	PI
INT2519	13791383.33	2255409.1	626.98	PI
INT2520	13791398.28	2255393.54	626.52	PC
INT2521	13791386.94	2255497.11	628.59	PC
INT2522	13791377.16	2255507.13	628.59	PT

REV.NO.	DATE	DESCRIPTION	BY

PAPE-DAWSON ENGINEERS
SAN ANTONIO | AUSTIN | HOUSTON | FORT WORTH | DALLAS
2000 NW LOOP 410 | SAN ANTONIO, TX 78213 | 210.375.9000
TBPE FIRM REGISTRATION #470 | TBPLS FIRM REGISTRATION #10028800

City of New Braunfels

KLEIN RD PHASE 2

INTERSECTION DETAIL

DOVE CROSSING

SHEET 7 OF 8

DGN:	STATE	PROJECT NO.	ROADWAY
CHK DGN:	TEXAS	NB 18-026	KLEIN RD
DWG:	COUNTY	CITY	SHEET NO.
CHK DWG:	GUADALUPE	NEW BRAUNFELS	141

Plotted on: 1/9/2020

Design Filename: H:\Projects\510\30\03\Design\Civil\Roadway\51030031nt07.dgn

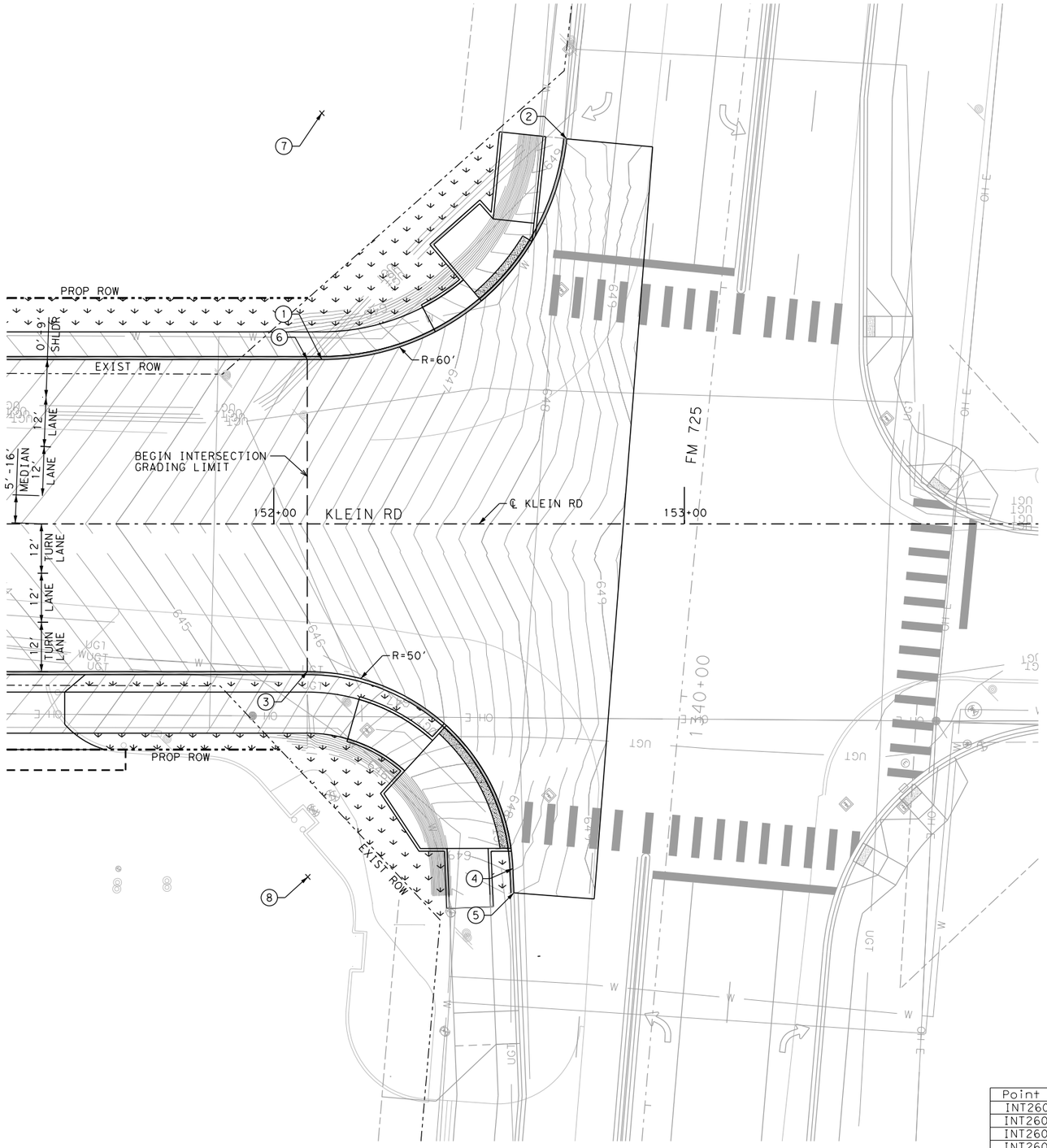

NOTES

1. SEE HORIZONTAL ALIGNMENT DATA SHEETS FOR HORIZONTAL ALIGNMENT DATA.
2. SEE INTERSECTION LAYOUT SHEETS FOR INTERSECTION DETAILS.
3. SEE PAVEMENT MARKING SHEETS FOR STRIPING AND TRAFFIC FLOW DETAILS.
4. EXISTING FEATURES ARE SHOWN SCREENED BACK; i.e. FADED.
5. ALL DIMENSIONS ARE TO EDGE OF PAVEMENT, CENTER OF MARKING OR FACE OF CURB UNLESS OTHERWISE NOTED.
6. STRIPPING OF VEGETATION FROM PROJECT SITES SHALL BE PHASED SO AS TO EXPOSE THE MINIMUM AMOUNT OF AREA TO SOIL EROSION FOR THE SHORTEST POSSIBLE PERIOD OF TIME PER THE NEW BRAUNFELS DRAINAGE AND EROSION CONTROL DESIGN MANUAL SEC.12.2(N).

Point #	Northing	Easting	Elev	Descrip
INT2601	13792233.59	2256275.5	645.8	PC
INT2602	13792313.85	2256278.66	648.8	PT
INT2603	13792177.99	2256327.43	645.74	PC
INT2604	13792180.35	2256396.74	648.4	PT
INT2605	13792176.4	2256401.13	Exist Grd	
INT2606	13792231.05	2256273.02	645.78	
INT2607	13792275.48	2256232.54	Exist Grd	CENTER
INT2608	13792143.17	2256363.31	Exist Grd	CENTER

DESIGN

INTERIM REVIEW

DOCUMENT INCOMPLETE. NOT INTENDED FOR PERMIT, BIDDING OR CONSTRUCTION.
ENGINEER: TYLER PAYNE DUBE
P.E. SERIAL NO: 118612
DATE: 1/9/2020

APPROVAL

INTERIM REVIEW

DOCUMENT INCOMPLETE. NOT INTENDED FOR PERMIT, BIDDING OR CONSTRUCTION.
ENGINEER: JOHN A. TYLER
P.E. SERIAL NO: 105193
DATE: 1/9/2020

0 10 20 30 60

SCALE: PLAN 1"= 30'

REV. NO.	DATE	DESCRIPTION	BY

PAPE-DAWSON ENGINEERS
SAN ANTONIO | AUSTIN | HOUSTON | FORT WORTH | DALLAS
2000 NW LOOP 410 | SAN ANTONIO, TX 78213 | 210.375.9000
TBPE FIRM REGISTRATION #470 | TBPLS FIRM REGISTRATION #10028800

City of New Braunfels

KLEIN RD PHASE 2

INTERSECTION DETAIL

FM 725

SHEET 8 OF 8

DGN:	STATE	PROJECT NO.	ROADWAY
CHK DGN:	TEXAS	NB 18-026	KLEIN RD
DWG:	COUNTY	CITY	SHEET NO.
CHK DWG:	GUADALUPE	NEW BRAUNFELS	142

Plotted on: 1/9/2020
Design Filename: H:\Projects\510\30\03\Design\Civil\Roadway\5103003int08.dgn

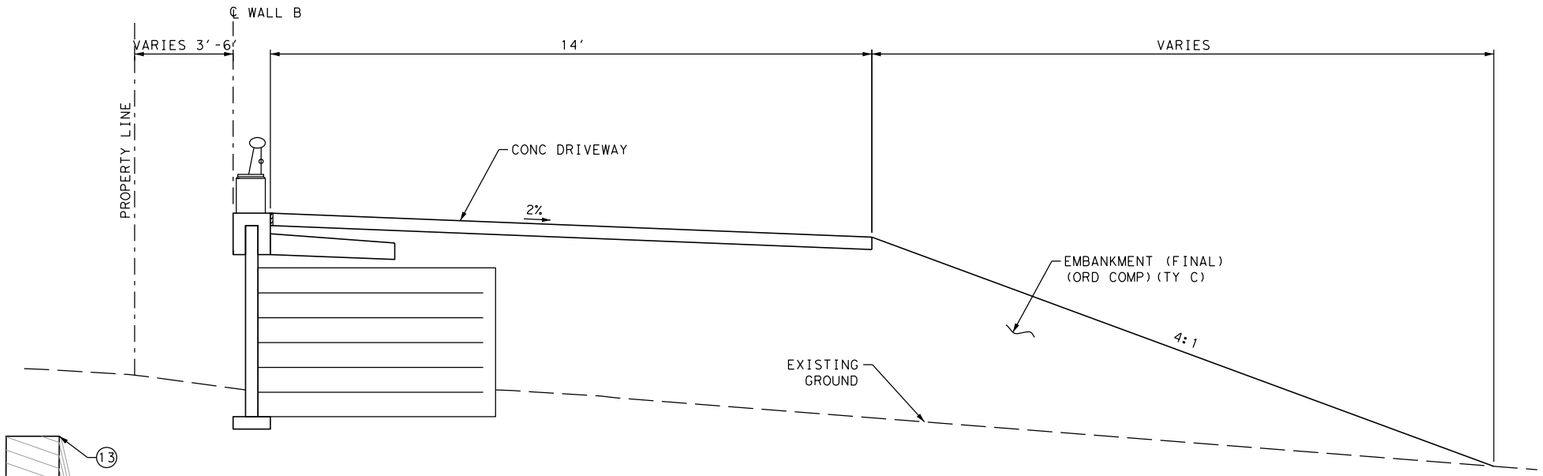

SECTION B-B
(N.T.S.)

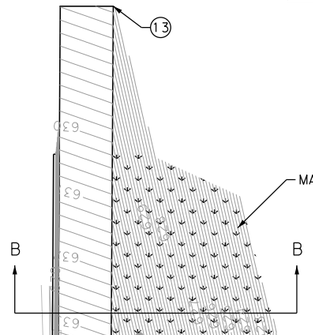

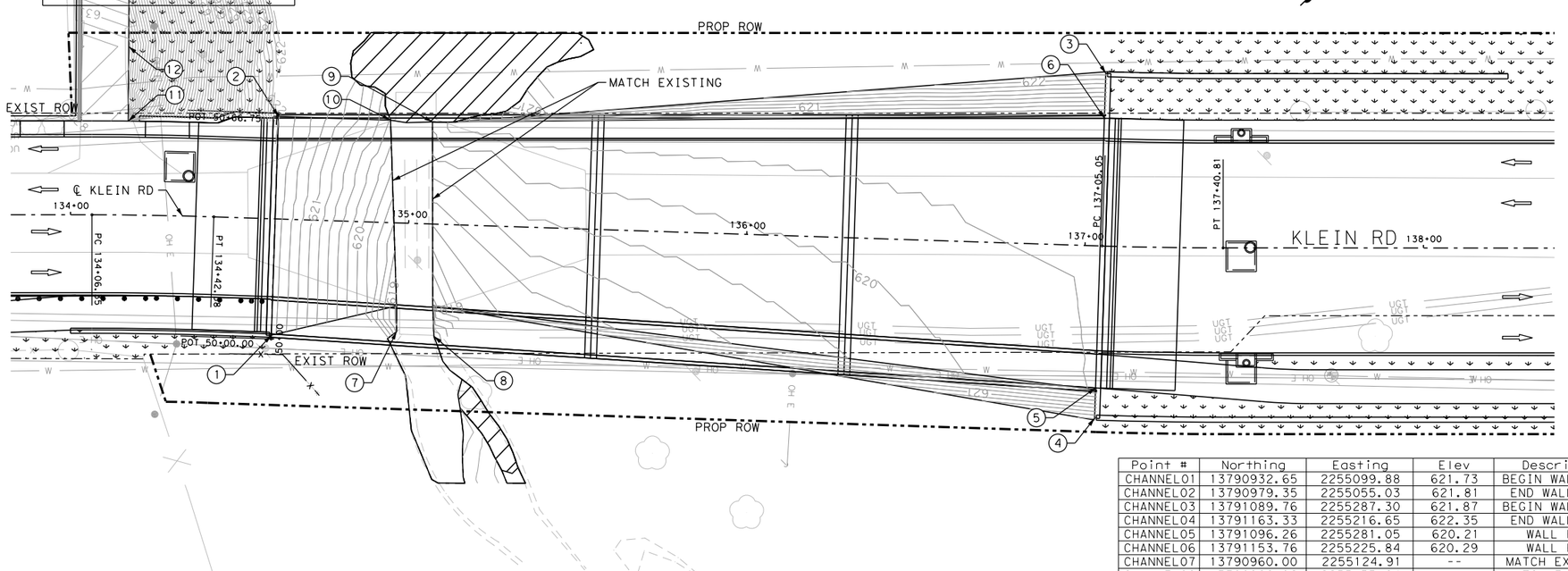

Point #	Northing	Easting	Elev	Descrip
CHANNEL01	13790932.65	2255099.88	621.73	BEGIN WALL E
CHANNEL02	13790979.35	2255055.03	621.81	END WALL E
CHANNEL03	13791089.76	2255287.30	621.87	BEGIN WALL F
CHANNEL04	13791163.33	2255216.65	622.35	END WALL F
CHANNEL05	13791096.26	2255281.05	620.21	WALL F
CHANNEL06	13791153.76	2255225.84	620.29	WALL F
CHANNEL07	13790960.00	2255124.91	--	MATCH EXIST
CHANNEL08	13790966.92	2255133.64	--	MATCH EXIST
CHANNEL09	13791010.84	2255087.93	--	MATCH EXIST
CHANNEL10	13791002.28	2255078.94	--	MATCH EXIST
CHANNEL11	13790946.64	2255025.01	632.90	CONC DRIVEWAY
CHANNEL12	13790962.10	2255009.35	633.33	CONC DRIVEWAY
CHANNEL13	13791027.68	2254943.13	627.91	CONC DRIVEWAY

NOTES

1. SEE HORIZONTAL ALIGNMENT DATA SHEETS FOR HORIZONTAL ALIGNMENT DATA.
2. SEE INTERSECTION LAYOUT SHEETS FOR INTERSECTION DETAILS.
3. SEE PAVEMENT MARKING SHEETS FOR STRIPING AND TRAFFIC FLOW DETAILS.
4. EXISTING FEATURES ARE SHOWN SCREENED BACK; i.e. FADED.
5. ALL DIMENSIONS ARE TO EDGE OF PAVEMENT, CENTER OF MARKING OR FACE OF CURB UNLESS OTHERWISE NOTED.
6. STRIPPING OF VEGETATION FROM PROJECT SITES SHALL BE PHASED SO AS TO EXPOSE THE MINIMUM AMOUNT OF AREA TO SOIL EROSION FOR THE SHORTEST POSSIBLE PERIOD OF TIME PER THE NEW BRAUNFELS DRAINAGE AND EROSION CONTROL DESIGN MANUAL SEC.12.2(N).

DESIGN

INTERIM REVIEW
DOCUMENT INCOMPLETE. NOT INTENDED FOR PERMIT, BIDDING OR CONSTRUCTION.
ENGINEER: TYLER PAYNE DUBE
P.E. SERIAL NO: 118612
DATE: 1/9/2020

APPROVAL

INTERIM REVIEW
DOCUMENT INCOMPLETE. NOT INTENDED FOR PERMIT, BIDDING OR CONSTRUCTION.
ENGINEER: JOHN A. TYLER
P.E. SERIAL NO: 105193
DATE: 1/9/2020

0 20 40 60
SCALE: 1" = 40'

REV. NO.	DATE	DESCRIPTION	BY

PAPE-DAWSON ENGINEERS
SAN ANTONIO | AUSTIN | HOUSTON | FORT WORTH | DALLAS
2000 NW LOOP 410 | SAN ANTONIO, TX 78213 | 210.375.9000
TBPE FIRM REGISTRATION #470 | TBPLS FIRM REGISTRATION #10028800

City of New Braunfels

KLEIN RD PHASE 2

CHANNEL GRADING LAYOUT

SHEET 1 OF 1

DGN:	STATE	PROJECT NO.	ROADWAY
CHK DGN:	TEXAS	NB 18-026	KLEIN RD
DWG:	COUNTY	CITY	SHEET NO.
CHK DWG:	GUADALUPE	NEW BRAUNFELS	143

Plotted on: 1/9/2020
Design Filename: H:\Projects\510\30\03\Design\Civil\Roadway\510303channel_grading.dgn

Plotted on: 1/9/2020

Design Filename: H:\Projects\510\30\03\Design\Civil\Roadway\Driveways\5103003_WKleinRd_Drwy_01.dgn

DRIVEWAY NO.	DRIVEWAY TYPE	A	B	C	D	E	F	G	H	I	STA	RT/LT
1	2	-	-	-	-	-	6.00′	12.00′	-	ME	104+16.77	LT
2	2	-	-	-	-	-	6.00′	15.78′	-	ME	108+53.39	LT
3	1	5.83′	10.00′	2.00′	12.17′	ME	-	-	-	-	107+49.12	RT
4	1	5.83′	10.00′	2.00′	FL	ME	-	-	-	-	111+74.11	RT
5	1	5.83′	10.00′	2.00′	12.17′	ME	-	-	-	-	114+38.61	RT
6	1	5.83′	10.00′	2.00′	FL	ME	-	-	-	-	114+68.20	RT
7	1	5.83′	10.00′	FL	-	ME	-	-	-	-	116+87.40	RT
8	2	-	-	-	-	-	5.00′	2.65′	-	ME	124+55.08	LT
9	2	-	-	-	-	-	5.00′	2.59′	-	ME	125+17.41	LT
10	2	-	-	-	-	-	5.00′	6.00′	-	ME	126+81.84	LT
11	2	-	-	-	-	-	5.00′	2.00′	30.47′	ME	134+10.00	LT
12	1	5.83′	10.00′	2.00′	5.54′	ME	-	-	-	-	145+19.08	RT
13	2	-	-	-	-	-	6.00′	2.00′	9.17′	ME	148+42.06	LT
14	1	5.83′	10.00′	2.00′	5.17′	ME	-	-	-	-	149+21.96	RT
15	1	5.83′	10.00′	2.00′	5.17′	ME	-	-	-	-	151+26.22	RT

* ME = MATCH EXISTING DRIVEWAY WIDTH
** FL = EXTEND DRIVEWAY TO EXISTING FENCE LINE

DRIVEWAY TYPE 1

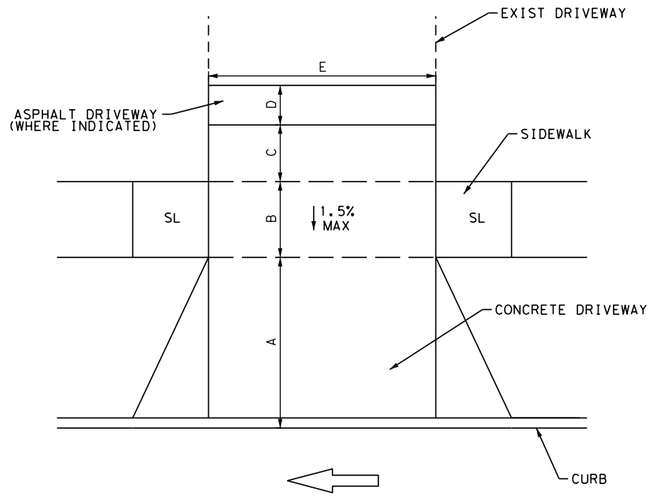

DRIVEWAY TYPE 2

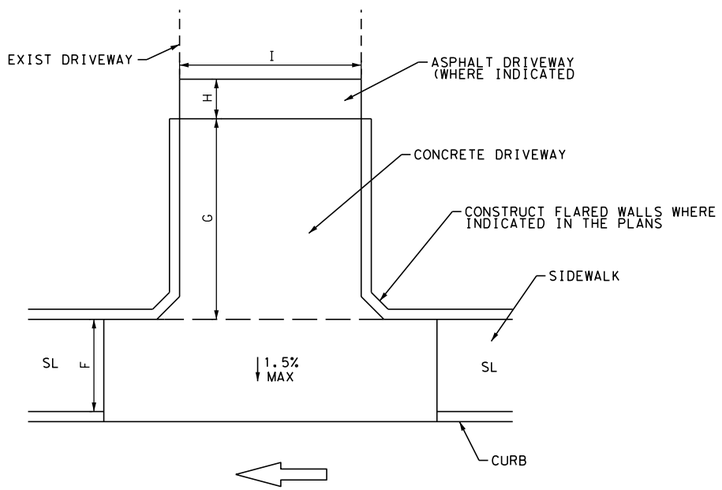

NOTE: SEE SPECIAL DETAILS FOR ADDITIONAL DRIVEWAY DETAILS

DESIGN

INTERIM REVIEW
DOCUMENT INCOMPLETE. NOT INTENDED FOR PERMIT, BIDDING OR CONSTRUCTION.
ENGINEER: TYLER PAYNE DUBE
P.E. SERIAL NO: 118612
DATE: 1/9/2020

APPROVAL

INTERIM REVIEW
DOCUMENT INCOMPLETE. NOT INTENDED FOR PERMIT, BIDDING OR CONSTRUCTION.
ENGINEER: JOHN A. TYLER
P.E. SERIAL NO: 105193
DATE: 1/9/2020

NOT TO SCALE

REV. NO.	DATE	DESCRIPTION	BY

PAPE-DAWSON ENGINEERS
SAN ANTONIO | AUSTIN | HOUSTON | FORT WORTH | DALLAS
2000 NW LOOP 410 | SAN ANTONIO, TX 78213 | 210.375.9000
TBPE FIRM REGISTRATION #470 | TBPLS FIRM REGISTRATION #10028800

City of New Braunfels

KLEIN RD PHASE 2

W KLEIN RD
DRIVEWAY DETAILS

SHEET 1 OF 1

DGN:	STATE	PROJECT NO.	ROADWAY
CHK DGN:	TEXAS	NB 18-026	KLEIN RD
DWG:	COUNTY	CITY	SHEET NO.
CHK DWG:	GUADALUPE	NEW BRAUNFELS	144

Plotted on: 1/9/2020

HORIZONTAL RAMP CONTROL

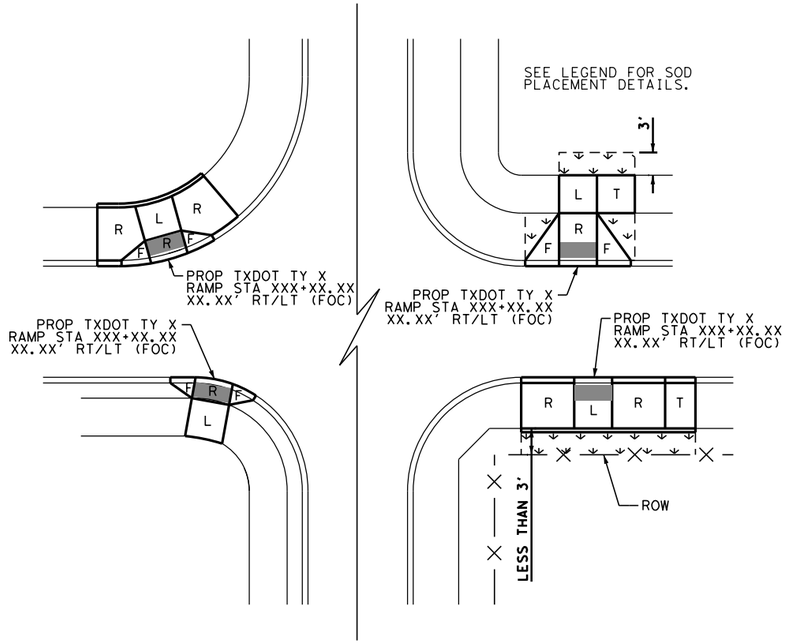

LEGEND OF EXISTING FEATURES

- CABLE TV PEDESTAL
- CONTROL POINT
- ELECTRIC JUNCTION BOX
- ELECTRIC METER
- ELECTRIC SERVICE POLE
- FIRE HYDRYANT
- GAS VALVE/COVER
- GUY ANCHOR
- GUY POLE (DEADMAN)
- IRRIGATION CONTROL VALVE
- LIGHT POLE
- MAIL BOX
- MANHOLE-SANITARY SEWER
- MANHOLE-TELEPHONE
- MANHOLE-STORM DRAIN
- PULL BOX
- SIGN
- SPRINKLER HEAD
- TELEPHONE PEDESTAL
- TRAFFIC SIGNAL CONTROLLER
- TRAFFIC SIGNAL LIGHT
- TRANSFORMER
- TREE/BUSHES
- WATER METER
- WATER VALVE

F = FLARE (10:1 OR LESS)

R = RAMP (CROSS SLOPE NOT TO EXCEED 48:1; LONGITUDINAL NOT TO EXCEED 12:1)

L = LANDING (SHALL NOT EXCEED 48:1 SLOPE IN ANY DIRECTION)

L1 = SHARED LANDING (SHALL NOT EXCEED 48:1 SLOPE IN ANY DIRECTION)

LS = LEVEL SIDEWALK (SHALL NOT EXCEED 48:1 SLOPE IN ANY DIRECTION)(PAID AS SIDEWALK)

SL = SLOPED SIDEWALK (LONGITUDINAL SLOPES MAY NOT EXCEED 20:1, CROSS SLOPES MAY NOT EXCEED 48:1)

T = TRANSITION (PAID FOR UNDER CONC SIDEWALKS)

TOC = TOP OF CURB

FOC = FACE OF CURB

= BLOCK SOD; PLACED BEHIND CONSTRUCTION LIMITS NEIGHBORING ROW, PLACED FULL LIMITS BETWEEN BACK OF CURB AND CONSTRUCTION IF DIVORCED OR AS SHOWN ON THE PLANS

– X – = EXISTING FENCE

(NSPI) = ITEM IS INCIDENTAL TO CURB RAMP/SIDEWALK CONSTRUCTION. (NO SEPERATE PAY ITEM)

NOTES

1. FLARE (F), RAMP (R), AND LANDING (L), DIRECTLY IN CONTACT WITH THE CURB RAMP ARE PAID FOR UNDER ITEM 531 "CURB RAMPS"
2. LEVEL SIDEWALK (LS) AND RAMPS (R) NOT DIRECTLY IN CONTACT WITH THE CURB RAMP ARE PAID FOR UNDER ITEM 531 "SIDEWALK"

DESIGN

INTERIM REVIEW

DOCUMENT INCOMPLETE. NOT INTENDED FOR PERMIT, BIDDING OR CONSTRUCTION.
ENGINEER: TYLER PAYNE DUBE
P.E. SERIAL NO: 118612
DATE: 1/9/2020

APPROVAL

INTERIM REVIEW

DOCUMENT INCOMPLETE. NOT INTENDED FOR PERMIT, BIDDING OR CONSTRUCTION.
ENGINEER: JOHN A. TYLER
P.E. SERIAL NO: 105193
DATE: 1/9/2020

NOT TO SCALE

REV. NO.	DATE	DESCRIPTION	BY

PAPE-DAWSON ENGINEERS
SAN ANTONIO | AUSTIN | HOUSTON | FORT WORTH | DALLAS
2000 NW LOOP 410 | SAN ANTONIO, TX 78213 | 210.375.9000
TBPE FIRM REGISTRATION #470 | TBPLS FIRM REGISTRATION #10028800

City of New Braunfels

KLEIN RD PHASE 2

SPECIAL DETAILS

SHEET 1 OF 7

DGN:	STATE	PROJECT NO.	ROADWAY
CHK DGN:	TEXAS	NB 18-026	KLEIN RD
DWG:	COUNTY	CITY	SHEET NO.
CHK DWG:	GUADALUPE	NEW BRAUNFELS	145

Design Filename: H:\Projects\510\30\03\Design\Civil\General\5103003_sample01.dgn

Plotted on: 1/9/2020

Design Filename: H:\Projects\510\30\03\Design\Civil\General\5103003_sample02.dgn

CURB TRENCH DETAIL

USE WHEN INSTALLING A CURB INTO EXISTING ASPHALT PAVEMENT

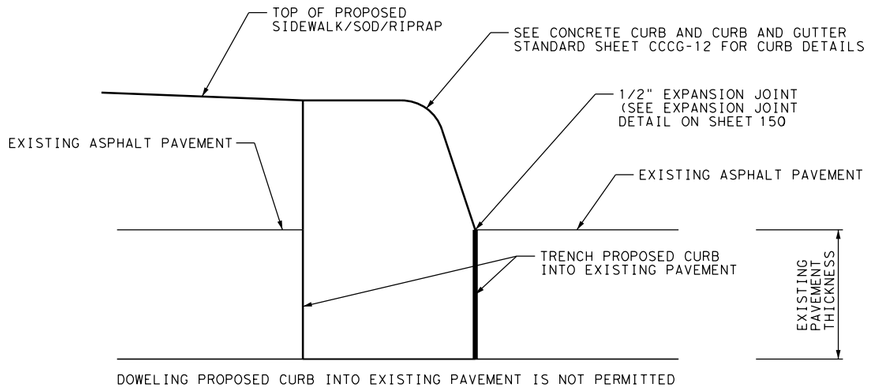

DOWELING PROPOSED CURB INTO EXISTING PAVEMENT IS NOT PERMITTED

INLET DOWELING DETAIL

NOT TO SCALE

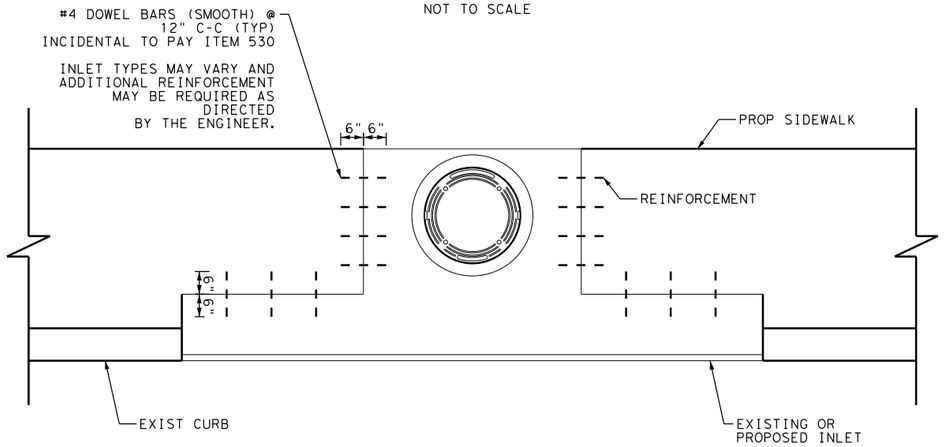

CURB TIE-IN DETAIL

USE WHEN INSTALLING A CURB ABUTTING AN EXISTING CURB OR DRAINAGE STRUCTURE

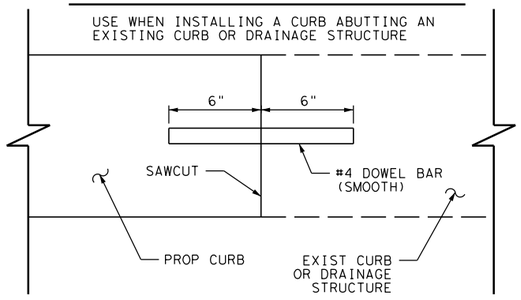

TYPICAL TRANSITION FOR CONCRETE CURB ENDS

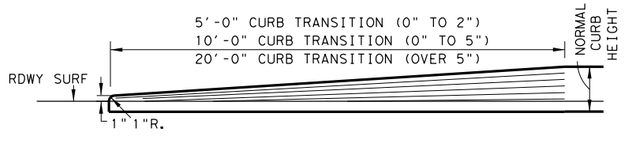

CROSSWALK DETAIL

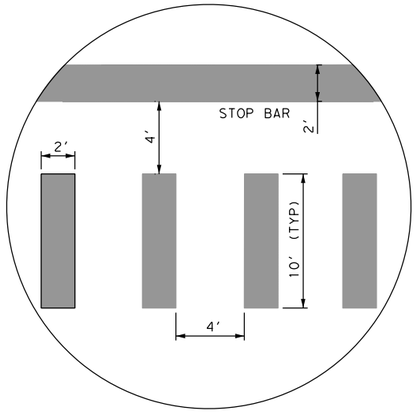

DESIGN

INTERIM REVIEW

DOCUMENT INCOMPLETE. NOT INTENDED FOR PERMIT, BIDDING OR CONSTRUCTION.
ENGINEER: TYLER PAYNE DUBE
P.E. SERIAL NO: 118612
DATE: 1/9/2020

APPROVAL

INTERIM REVIEW

DOCUMENT INCOMPLETE. NOT INTENDED FOR PERMIT, BIDDING OR CONSTRUCTION.
ENGINEER: JOHN A. TYLER
P.E. SERIAL NO: 105193
DATE: 1/9/2020

NOT TO SCALE

REV. NO.	DATE	DESCRIPTION	BY

PAPE-DAWSON ENGINEERS
SAN ANTONIO | AUSTIN | HOUSTON | FORT WORTH | DALLAS
2000 NW LOOP 410 | SAN ANTONIO, TX 78213 | 210.375.9000
TBPE FIRM REGISTRATION #470 | TBPLS FIRM REGISTRATION #10028800

City of New Braunfels

KLEIN RD PHASE 2

SPECIAL DETAILS

SHEET 2 OF 7

DGN:	STATE	PROJECT NO.	ROADWAY
CHK DGN:	TEXAS	NB 18-026	KLEIN RD
DWG:	COUNTY	CITY	SHEET NO.
CHK DWG:	GUADALUPE	NEW BRAUNFELS	146

Plotted on: 1/9/2020

SIDEWALK EXPANSION JOINT DETAIL

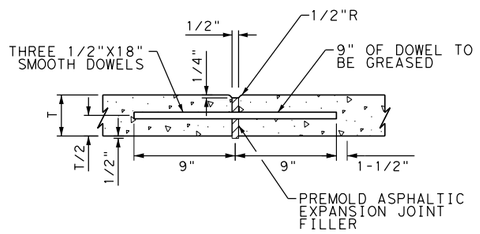

NOTES:

1. SIDEWALK EXPANSION JOINT DOWELS ARE CONSIDERED SUBSIDIARY TO ITEM 531.
2. EXPANSION JOINTS ARE TO BE USED BETWEEN CONCRETE DRIVEWAY AND SIDEWALK.

SIDEWALK DETAILS

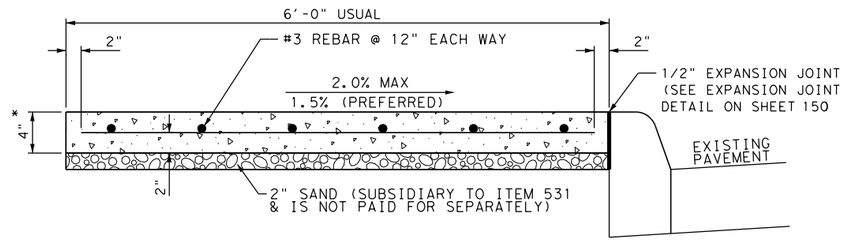

PLACE GROOVED JOINTS IN THE SIDEWALK AT A MAX SPACING OF 10 FT
PLACE 1/2" EXPANSION JOINTS AT A MAX SPACING OF 40 FT TO COINCIDE WITH THE CURB EXPANSION JOINTS (SEE SIDEWALK EXPANSION JOINT DETAIL).

* UNLESS OTHERWISE SHOWN

CONCRETE RIPRAP DETAIL

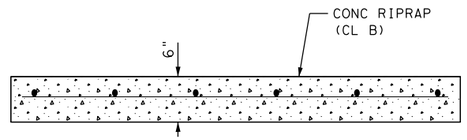

CONCRETE RIPRAP W/ TOEDOWN DETAIL

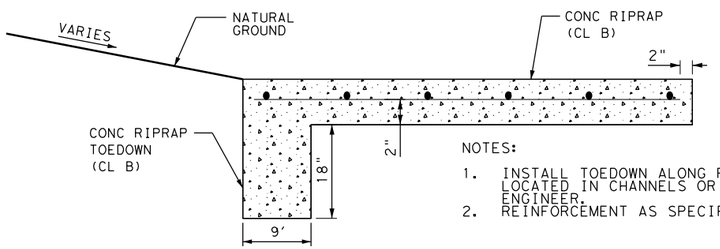

NOTES:

1. INSTALL TOEDOWN ALONG PERIMETER OF RIPRAP LOCATED IN CHANNELS OR AS DIRECTED BY THE ENGINEER.
2. REINFORCEMENT AS SPECIFIED IN ITEM 432.

RIPRAP JOINT DETAIL

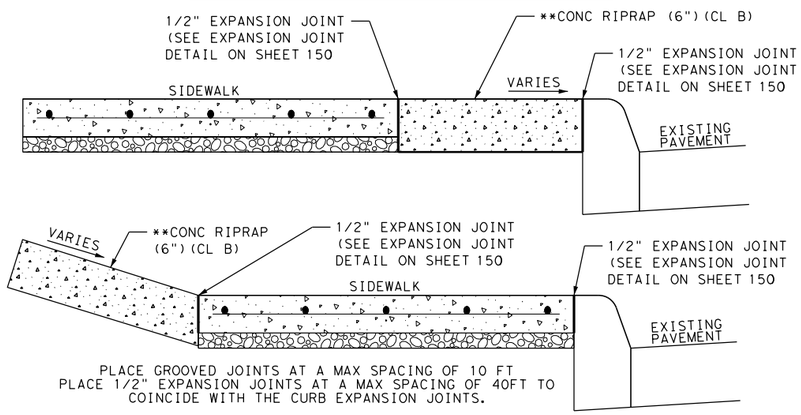

PLACE GROOVED JOINTS AT A MAX SPACING OF 10 FT
PLACE 1/2" EXPANSION JOINTS AT A MAX SPACING OF 40FT TO COINCIDE WITH THE CURB EXPANSION JOINTS.

** REINFORCEMENT AS SPECIFIED IN ITEM 432

DESIGN

INTERIM REVIEW

DOCUMENT INCOMPLETE. NOT INTENDED FOR PERMIT, BIDDING OR CONSTRUCTION.
ENGINEER: TYLER PAYNE DUBE
P.E. SERIAL NO: 118612
DATE: 1/9/2020

APPROVAL

INTERIM REVIEW

DOCUMENT INCOMPLETE. NOT INTENDED FOR PERMIT, BIDDING OR CONSTRUCTION.
ENGINEER: JOHN A. TYLER
P.E. SERIAL NO: 105193
DATE: 1/9/2020

NOT TO SCALE

REV. NO.	DATE	DESCRIPTION	BY

PAPE-DAWSON ENGINEERS
SAN ANTONIO | AUSTIN | HOUSTON | FORT WORTH | DALLAS
2000 NW LOOP 410 | SAN ANTONIO, TX 78213 | 210.375.9000
TBPE FIRM REGISTRATION #470 | TBPLS FIRM REGISTRATION #10028800

City of New Braunfels

KLEIN RD PHASE 2

SPECIAL DETAILS

SHEET 3 OF 7

DGN:	STATE	PROJECT NO.	ROADWAY
CHK DGN:	TEXAS	NB 18-026	KLEIN RD
DWG:	COUNTY	CITY	SHEET NO.
CHK DWG:	GUADALUPE	NEW BRAUNFELS	147

Design Filename: H:\Projects\5103\03\Design\Civil\General\5103003_sample03.dgn

Plotted on: 1/9/2020

Design Filename: H:\Projects\510\30\03\Design\Civil\General\5103003_sample04.dgn

OBSTRUCTION CONFLICT

NOTES:

1. UTILIZE DETAIL AT OBSTRUCTION ENCROACHMENTS INTO THE PEDESTRIAN ACCESS ROUTE. A MINIMUM UNOBSTRUCTED CLEARANCE OF 4', UNLESS OTHERWISE SPECIFIED, SHOULD BE MAINTAINED AROUND THE OBSTRUCTION MEASURED FROM THE MOST RESTRICTIVE LOCATION OR AS APPROVED BY THE ENGINEER

2. IF OBSTRUCTION IS LOCATED WITHIN THE SIDEWALK, CONSTRUCT 2' SQUARE CONSTRUCTION JOINT CENTERED ON OBSTRUCTION TO FACILITATE FUTURE MAINTENANCE WITHOUT FULL SIDEWALK PANEL REMOVAL/REPLACEMENT

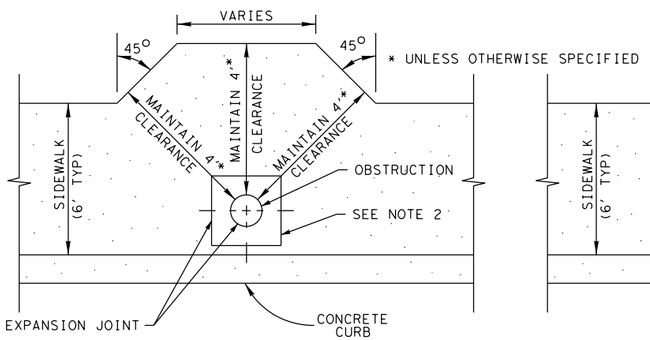

OBSTRUCTION IN SIDEWALK

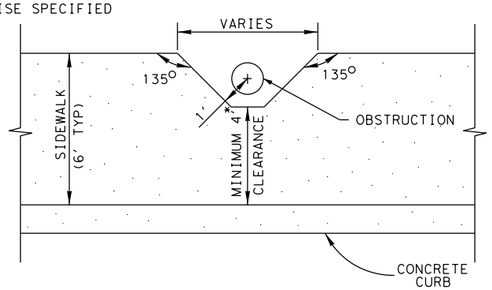

OBSTRUCTION OUTSIDE SIDEWALK

DESIGN

INTERIM REVIEW

DOCUMENT INCOMPLETE. NOT INTENDED FOR PERMIT, BIDDING OR CONSTRUCTION.
ENGINEER: TYLER PAYNE DUBE
P.E. SERIAL NO: 118612
DATE: 1/9/2020

APPROVAL

INTERIM REVIEW

DOCUMENT INCOMPLETE. NOT INTENDED FOR PERMIT, BIDDING OR CONSTRUCTION.
ENGINEER: JOHN A. TYLER
P.E. SERIAL NO: 105193
DATE: 1/9/2020

NOT TO SCALE

REV. NO.	DATE	DESCRIPTION	BY

PAPE-DAWSON ENGINEERS
SAN ANTONIO | AUSTIN | HOUSTON | FORT WORTH | DALLAS
2000 NW LOOP 410 | SAN ANTONIO, TX 78213 | 210.375.9000
TBPE FIRM REGISTRATION #470 | TBPLS FIRM REGISTRATION #10028800

City of New Braunfels

KLEIN RD PHASE 2

SPECIAL DETAILS

SHEET 4 OF 7

DGN:	STATE	PROJECT NO.	ROADWAY
CHK DGN:	TEXAS	NB 18-026	KLEIN RD
DWG:	COUNTY	CITY	SHEET NO.
CHK DWG:	GUADALUPE	NEW BRAUNFELS	148

Plotted on: 1/9/2020

NOTES:

1. SEE PLAN SHEETS FOR LOCATIONS OF SIDEWALKS AND RETAINING WALLS.
2. LONGITUDINAL SLOPE OF SIDEWALKS SHALL NOT EXCEED 5% EXCEPT IN CASES WHERE THE ADJACENT ROADWAY SLOPE EXCEEDS 5%. IF ROADWAY SLOPE EXCEEDS 5%, LONGITUDINAL SLOPE OF SIDEWALK MAY MATCH THAT OF ROADWAY.
3. IF SIDEWALK WIDTH IS LESS THAN 5', PROVIDE 5' x 5' PASSING AREAS AT INTERVALS NOT TO EXCEED 200' SPACING.
4. WHERE SIDEWALK WITH RETAINING WALL IS SPECIFIED, RETAINING WALL WILL BE SUBSIDIARY TO THE ITEM, "CONCRETE SIDEWALK (SPECIAL) (TYPE B)", ITEM 0531-6033 WITH LIMITS OF PAY AS SHOWN HEREON. ESTIMATED FACE OF RETAINING WALL IS INDICATED ON THE PLANS FOR CONTRACTOR INFORMATION ONLY.
5. CONCRETE SIDEWALK (SPECIAL) (TY B) THICKNESS IS PERMITTED TO BE 6" IN AREAS WHERE WALL HEIGHTS ARE LESS THAN OR EQUAL TO 3' AS MEASURED FROM TOP OF SIDEWALK TO TOP OF WALL. THE SIDEWALK THICKNESS SHALL BE CONSTRUCTED AS INDICATED ON DETAIL FOR WALL HEIGHTS IN EXCESS OF 3' OR WHERE WALLS OF ANY HEIGHT ARE TO BE CONSTRUCTED ADJACENT TO PARKING.
6. EXCAVATION, HAULING, AND DISPOSAL OF EXCAVATED MATERIAL IS NOT PAID FOR SEPARATELY, CONSIDERED SUBSIDIARY TO ITEM 531.

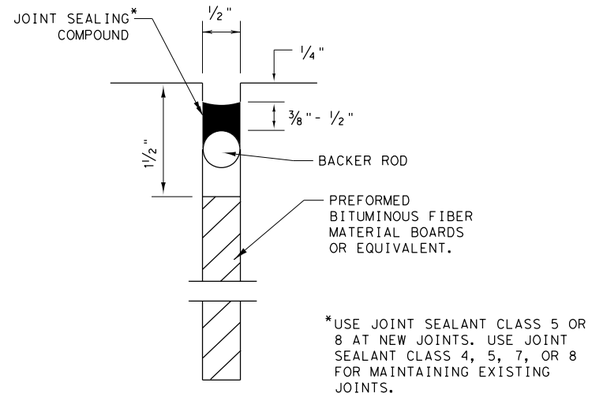

EXPANSION JOINT DETAIL

DESIGN

INTERIM REVIEW

DOCUMENT INCOMPLETE. NOT INTENDED FOR PERMIT, BIDDING OR CONSTRUCTION.
ENGINEER: TYLER PAYNE DUBE
P.E. SERIAL NO: 118612
DATE: 1/9/2020

APPROVAL

INTERIM REVIEW

DOCUMENT INCOMPLETE. NOT INTENDED FOR PERMIT, BIDDING OR CONSTRUCTION.
ENGINEER: JOHN A. TYLER
P.E. SERIAL NO: 105193
DATE: 1/9/2020

NOT TO SCALE

REV. NO.	DATE	DESCRIPTION	BY

PAPE-DAWSON ENGINEERS
SAN ANTONIO | AUSTIN | HOUSTON | FORT WORTH | DALLAS
2000 NW LOOP 410 | SAN ANTONIO, TX 78213 | 210.375.9000
TBPE FIRM REGISTRATION #470 | TBPLS FIRM REGISTRATION #10028800

City of New Braunfels

KLEIN RD PHASE 2

SPECIAL DETAILS

SHEET 5 OF 7

DGN:	STATE	PROJECT NO.	ROADWAY
CHK DGN:	TEXAS	NB 18-026	KLEIN RD
DWG:	COUNTY	CITY	SHEET NO.
CHK DWG:	GUADALUPE	NEW BRAUNFELS	149

Design Filename: H:\Projects\510\30\03\Design\Civil\General\5103003_sample05.dgn

Plotted on: 1/9/2020

Design Filename: H:\Projects\510\30\03\Design\Civil\General\5103003_sample06.dgn

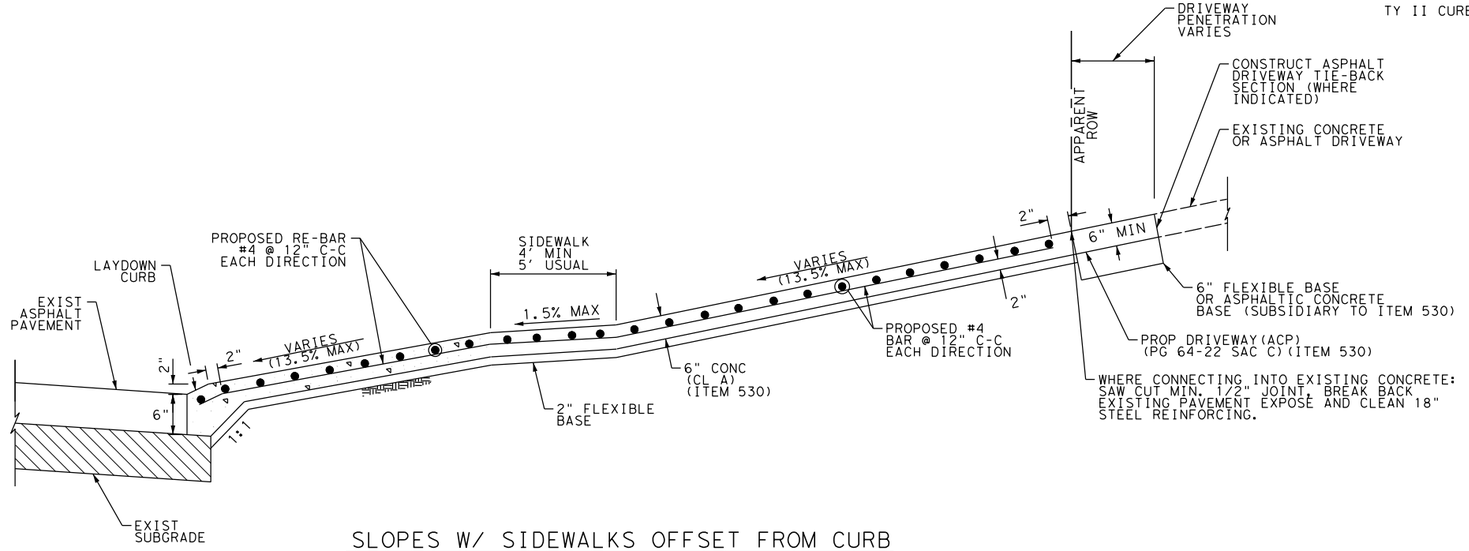

SLOPES W/ SIDEWALKS OFFSET FROM CURB
(SECTION A-A)

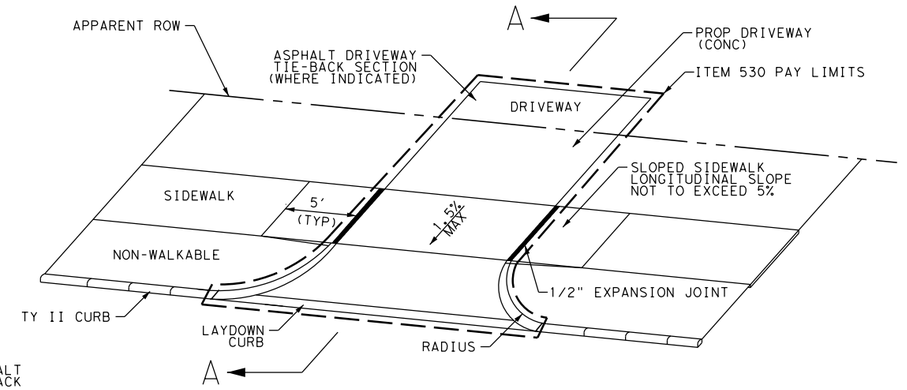

SIDEWALK OFFSET FROM CURB DETAILS

NOTES:

SLOPED SIDEWALK SEGMENT LENGTHS ARE SHOWN TO CONSERVATIVELY ACCOMMODATE STANDARD CURB HEIGHTS ON LEVEL STREETS. SOME SLOPED SIDEWALK SEGMENTS MAY REQUIRE ADDITIONAL LENGTH TO ENSURE LONGITUDINAL SLOPES DO NOT EXCEED 5%. WITH THE APPROVAL OF THE ENGINEER, THE CONTRACTOR MAY EXTEND THE SLOPED SIDEWALK SEGMENT TO THE NEXT PLANAR ELEMENT (LS, L, SL, R, T, ETC.) OR UNTIL THE SLOPED SIDEWALK REACHES CURB HEIGHT, WHICHEVER IS SHORTER.

DESIGN

INTERIM REVIEW

DOCUMENT INCOMPLETE. NOT INTENDED FOR PERMIT, BIDDING OR CONSTRUCTION.
ENGINEER: TYLER PAYNE DUBE
P.E. SERIAL NO: 118612
DATE: 1/9/2020

APPROVAL

INTERIM REVIEW

DOCUMENT INCOMPLETE. NOT INTENDED FOR PERMIT, BIDDING OR CONSTRUCTION.
ENGINEER: JOHN A. TYLER
P.E. SERIAL NO: 105193
DATE: 1/9/2020

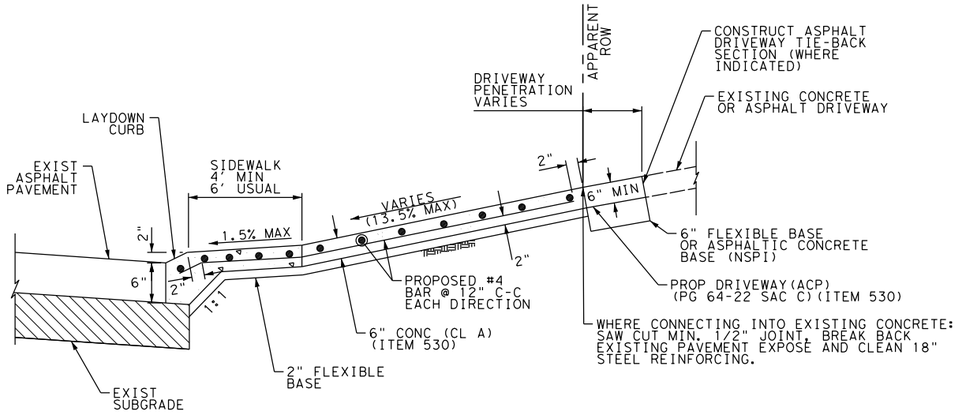

DRIVEWAY SLOPES W/ SIDEWALKS ADJACENT TO CURB
(SECTION B-B)

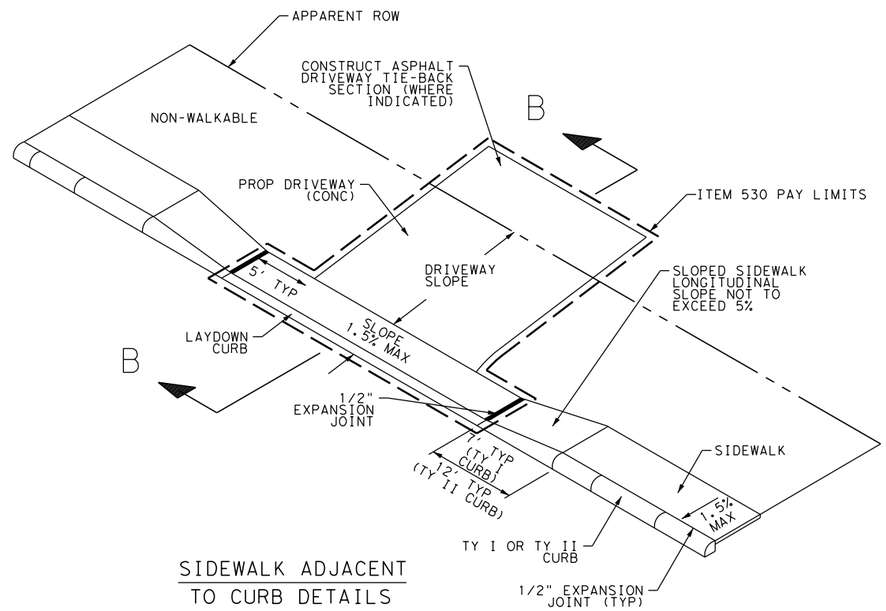

SIDEWALK ADJACENT
TO CURB DETAILS

NOT TO SCALE

REV. NO.	DATE	DESCRIPTION	BY

PAPE-DAWSON ENGINEERS

SAN ANTONIO | AUSTIN | HOUSTON | FORT WORTH | DALLAS
2000 NW LOOP 410 | SAN ANTONIO, TX 78213 | 210.375.9000
TBPE FIRM REGISTRATION #470 | TBPLS FIRM REGISTRATION #10028800

City of New Braunfels

KLEIN RD PHASE 2

SPECIAL DETAILS

SHEET 6 OF 7

DGN:	STATE	PROJECT NO.	ROADWAY
CHK DGN:	TEXAS	NB 18-026	KLEIN RD
DWG:	COUNTY	CITY	SHEET NO.
CHK DWG:	GUADALUPE	NEW BRAUNFELS	150

Plotted on: 1/9/2020

Design Filename: H:\Projects\510\30\03\Design\Civil\General\5103003_sample07.dgn

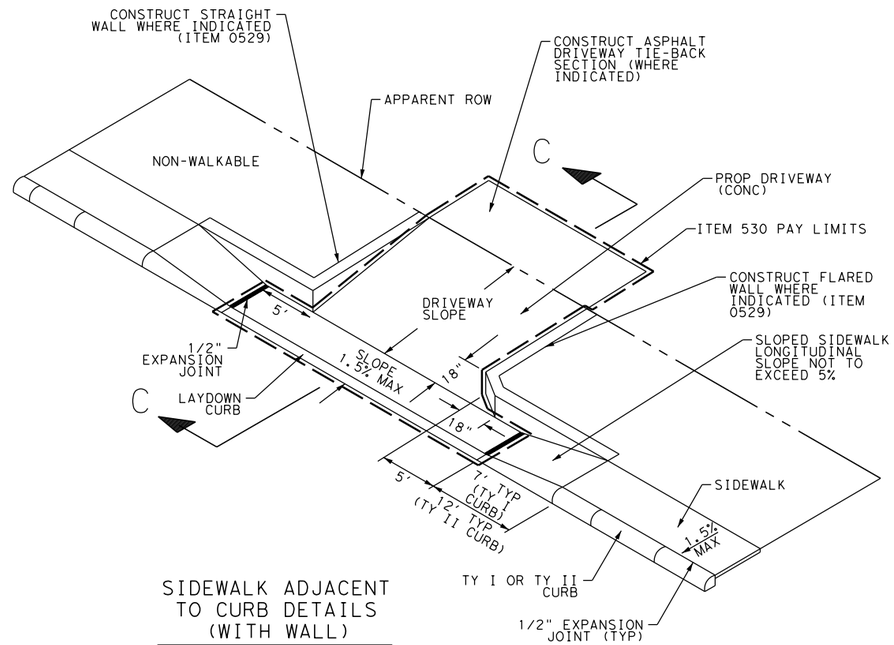

SIDEWALK ADJACENT TO CURB DETAILS (WITH WALL)

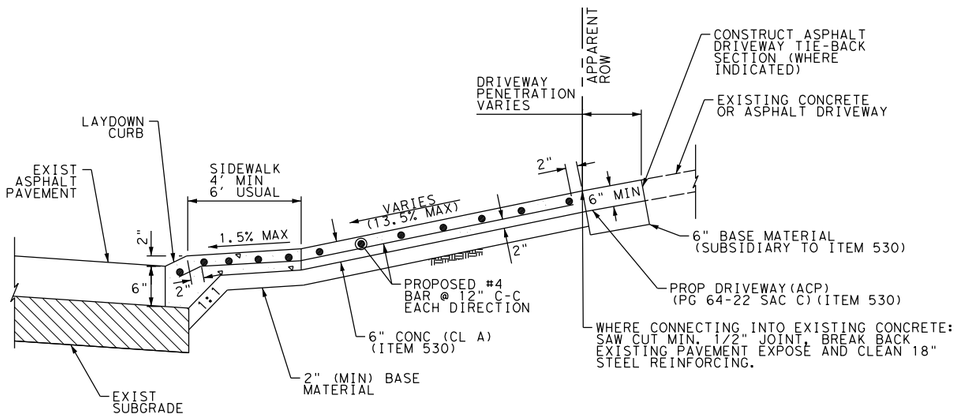

DRIVEWAY SLOPES W/ SIDEWALKS ADJACENT TO CURB
(SECTION C-C)

NOTES:

SLOPED SIDEWALK SEGMENT LENGTHS ARE SHOWN TO CONSERVATIVELY ACCOMMODATE STANDARD CURB HEIGHTS ON LEVEL STREETS. SOME SLOPED SIDEWALK SEGMENTS MAY REQUIRE ADDITIONAL LENGTH TO ENSURE LONGITUDINAL SLOPES DO NOT EXCEED 5%. WITH THE APPROVAL OF THE ENGINEER, THE CONTRACTOR MAY EXTEND THE SLOPED SIDEWALK SEGMENT TO THE NEXT PLANAR ELEMENT (LS, L, SL, R, T, ETC.) OR UNTIL THE SLOPED SIDEWALK REACHES THE HEIGHT OF THE ADJACENT CURB, WHICHEVER IS SHORTER.

DESIGN

INTERIM REVIEW

DOCUMENT INCOMPLETE. NOT INTENDED FOR PERMIT, BIDDING OR CONSTRUCTION.
ENGINEER: TYLER PAYNE DUBE
P.E. SERIAL NO: 118612
DATE: 1/9/2020

APPROVAL

INTERIM REVIEW

DOCUMENT INCOMPLETE. NOT INTENDED FOR PERMIT, BIDDING OR CONSTRUCTION.
ENGINEER: JOHN A. TYLER
P.E. SERIAL NO: 105193
DATE: 1/9/2020

NOT TO SCALE

REV. NO.	DATE	DESCRIPTION	BY

PAPE-DAWSON ENGINEERS
SAN ANTONIO | AUSTIN | HOUSTON | FORT WORTH | DALLAS
2000 NW LOOP 410 | SAN ANTONIO, TX 78213 | 210.375.9000
TBPE FIRM REGISTRATION #470 | TBPLS FIRM REGISTRATION #10028800

City of New Braunfels

KLEIN RD PHASE 2

SPECIAL DETAILS

SHEET 7 OF 7

DGN:	STATE	PROJECT NO.	ROADWAY
CHK DGN:	TEXAS	NB 18-026	KLEIN RD
DWG:	COUNTY	CITY	SHEET NO.
CHK DWG:	GUADALUPE	NEW BRAUNFELS	151

Plotted on: 1/9/2020

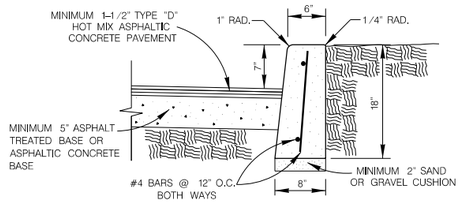

HEADER CURB

ITEM 500 ON SAND OR GRAVEL
SCALE : 1"=2'

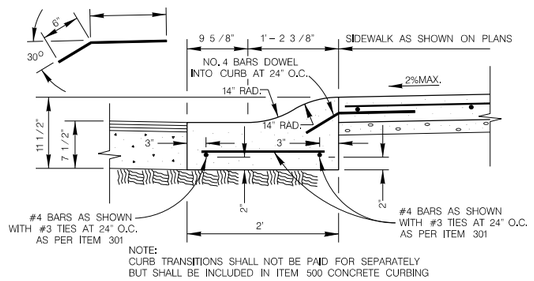

NOTE:
CURB TRANSITIONS SHALL NOT BE PAID FOR SEPARATELY BUT SHALL BE INCLUDED IN ITEM 500 CONCRETE CURBING

MOUNTABLE CURB

ITEM 500 ON COMPACTED SUBGRADE
SCALE : 1"=2'

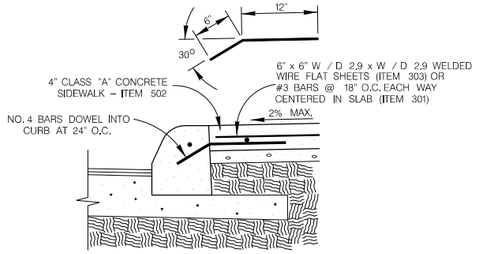

CONCRETE SIDEWALK ABUTTING CURB SECTION

ITEM 502
SCALE : 1"=2'

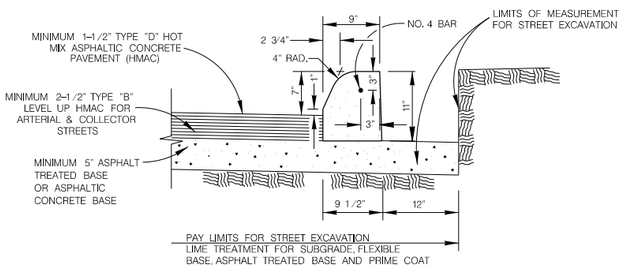

CONCRETE CURB

ITEM 500 ON ASPHALT TREATED BASE OR ASPHALTIC CONCRETE BASE
SCALE : 1"=2'

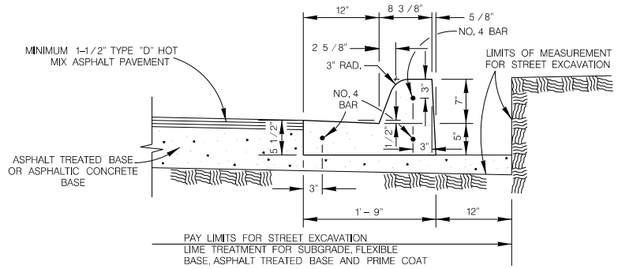

TYPICAL CURB & GUTTER DETAIL

ITEM 500 ON ASPHALT TREATED BASE OR ASPHALTIC CONCRETE BASE
SCALE : 1"=2'

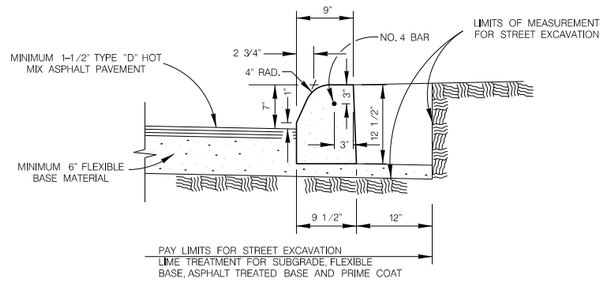

CONCRETE CURB

ITEM 500 ON FLEXIBLE BASE MATERIAL
SCALE : 1"=2'

12"

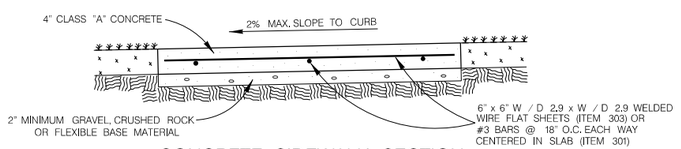

CONCRETE SIDEWALK SECTION

ITEM 502
SCALE : 1"=2'

DESIGN

INTERIM REVIEW

DOCUMENT INCOMPLETE. NOT INTENDED FOR PERMIT, BIDDING OR CONSTRUCTION.
ENGINEER: TYLER PAYNE DUBE
P.E. SERIAL NO: 118612
DATE: 1/9/2020

APPROVAL

INTERIM REVIEW

DOCUMENT INCOMPLETE. NOT INTENDED FOR PERMIT, BIDDING OR CONSTRUCTION.
ENGINEER: JOHN A. TYLER
P.E. SERIAL NO: 105193
DATE: 1/9/2020

NOT TO SCALE

REV. NO.	DATE	DESCRIPTION	BY

PAPE-DAWSON ENGINEERS
SAN ANTONIO | AUSTIN | HOUSTON | FORT WORTH | DALLAS
2000 NW LOOP 410 | SAN ANTONIO, TX 78213 | 210.375.9000
TBPE FIRM REGISTRATION #470 | TBPLS FIRM REGISTRATION #10028800

City of New Braunfels

KLEIN RD PHASE 2

MISCELLANEOUS CONSTRUCTION STANDARDS

DGN:	STATE	PROJECT NO.	ROADWAY
CHK DGN:	TEXAS	NB 18-026	KLEIN RD
DWG:	COUNTY	CITY	SHEET NO.
CHK DWG:	GUADALUPE	NEW BRAUNFELS	152

Design Filename: H:\Projects\510\30\03\Design\Civil\Standards\Roadway\constrstdsl.dgn

DISCLAIMER:
The use of this standard is governed by the "Texas Engineering Practice Act". No warranty of any kind is made by TxDOT for any purpose whatsoever. TxDOT assumes no responsibility for the conversion of this standard to other formats or for incorrect results or damages resulting from its use.

DATE: 1/9/2020
FILE: H:\projects\510\30\03\Design\Civil\Standards\Roadway\tehmac11.dgn

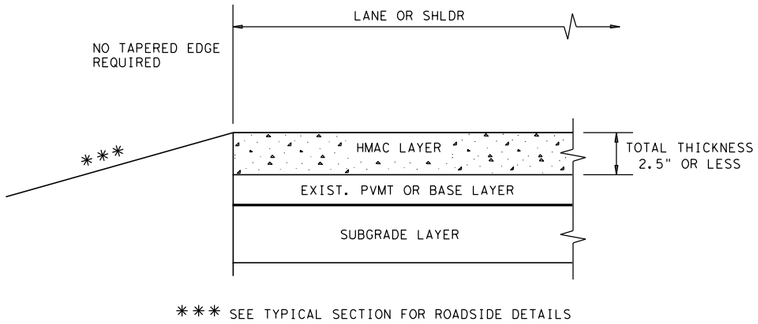

*** SEE TYPICAL SECTION FOR ROADSIDE DETAILS

CONDITION - 1

THIN HMAC SURFACES OR HMAC OVERLAY
WITH THICKNESS OF 2.5" OR LESS

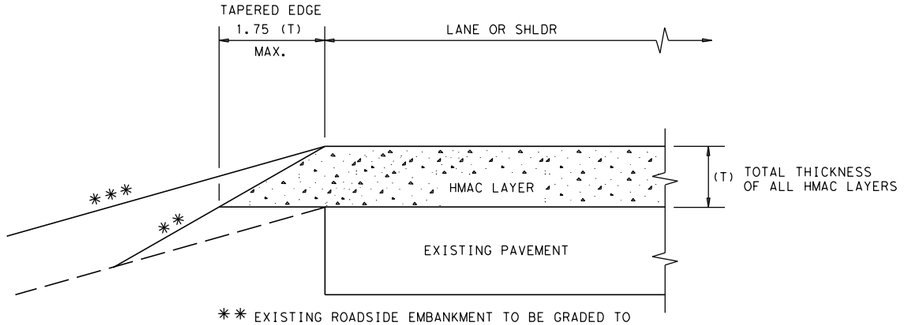

** EXISTING ROADSIDE EMBANKMENT TO BE GRADED TO PRODUCE A SMOOTH LEVEL SURFACE FOR PLACEMENT OF TAPERED EDGE. THIS WORK IS SUBSIDIARY TO THE VARIOUS BID ITEMS.

*** SEE TYPICAL SECTION FOR ROADSIDE DETAILS

CONDITION - 2

OVERLAY OF EXISTING PAVEMENT
HMAC THICKNESS 2.5" TO 5"

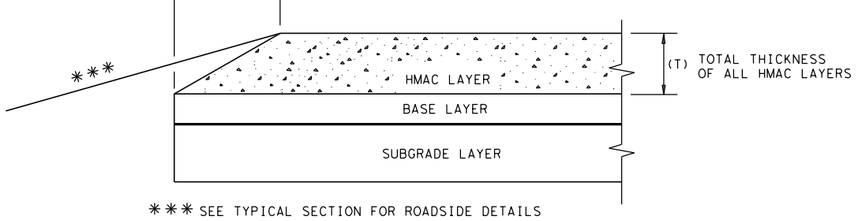

*** SEE TYPICAL SECTION FOR ROADSIDE DETAILS

CONDITION - 3

NEW OR RECONSTRUCTED PAVEMENT
HMAC THICKNESS 2.5" TO 5"

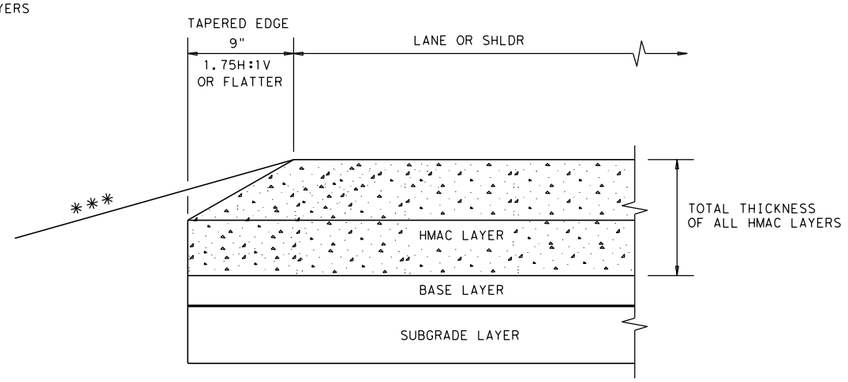

*** SEE TYPICAL SECTION FOR ROADSIDE DETAILS

CONDITION - 4

NEW OR RECONSTRUCTED PAVEMENT
HMAC THICKNESS 5" OR GREATER

(NOT TO SCALE)

GENERAL NOTES

1. UNLESS OTHERWISE SHOWN IN THE PLANS, A VERTICAL EDGE IS PERMISSIBLE FOR HMAC PLACED GREATER THAN 5" BELOW THE EDGE OF PAVEMENT AND FOR THICKNESS OF HMAC LESS THAN 2.5".
2. FOR FURTHER INFORMATION REGARDING THE ROADSIDE AND PAVEMENT DETAILS, SEE TYPICAL SECTIONS.
3. PAYMENT FOR TAPERED EDGE WILL BE IN ACCORDANCE WITH APPLICABLE ITEMS IN THE CONTRACT.
4. THE SLOPE OF THE TAPERED EDGE SHALL BE 1.75H:1V OR FLATTER.
5. THE TAPERED EDGE SHALL BE PRODUCED BY USE OF A SCREED ATTACHMENT CAPABLE OF PRODUCING A SMOOTH COMPACTED SURFACE. ADDITIONAL COMPACTING EFFORT BEHIND THE SCREED IS NOT REQUIRED.

Texas Department of Transportation

Design Division Standard

TAPERED EDGE DETAILS
HMAC PAVEMENT

TE(HMAC)-11

FILE: tehmac11.dgn	DN: TxDOT	CK: RL	DW: KB	CK:		
© TxDOT January 2011	CONT	SECT	JOB		HIGHWAY	
REVISIONS					KLEIN RD	
	DIST	COUNTY			SHEET NO.	
	SAT	GUADALUPE			153	

DISCLAIMER:
The use of this standard is governed by the "Texas Engineering Practice Act". No warranty of any kind is made by TxDOT for any purpose whatsoever. TxDOT assumes no responsibility for the conversion of this standard to other formats or for incorrect results or damages resulting from its use.

DATE: 1/9/2020
FILE: H:\projects\510\30\03\Design\Civil\Standards\Roadway\ped18.dgn

TYPE 1

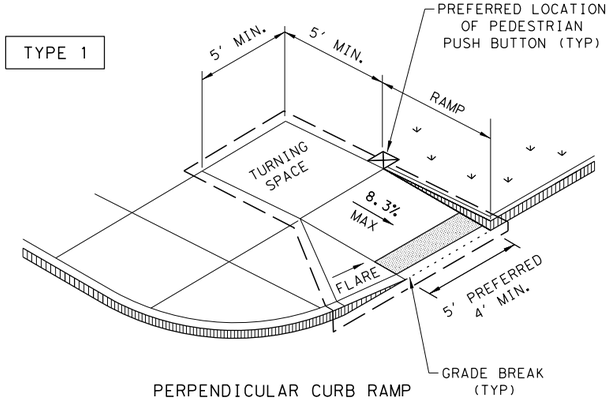

PERPENDICULAR CURB RAMP

TYPE 2

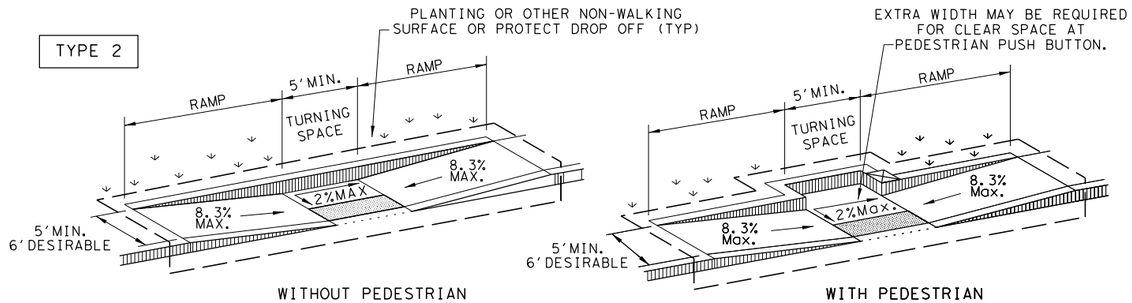

WITHOUT PEDESTRIAN PUSH BUTTON

WITH PEDESTRIAN PUSH BUTTON

PARALLEL CURB RAMP

TYPE 3

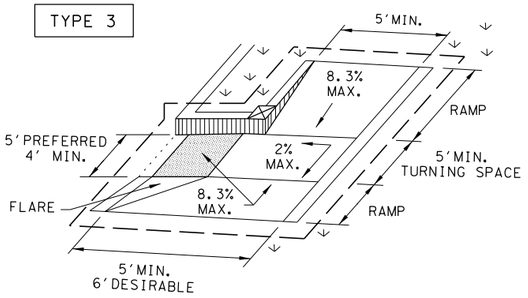

TYPE 6

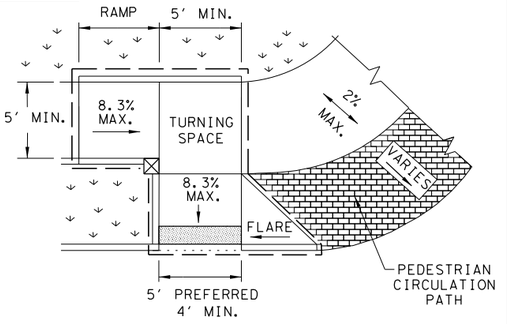

COMBINATION CURB RAMPS

TYPE 20

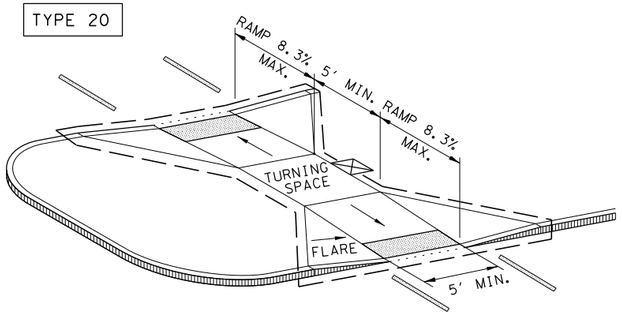

CURB RAMPS AT MEDIAN ISLANDS

TYPE 7

(SIDEWALK SET BACK FROM CURB)

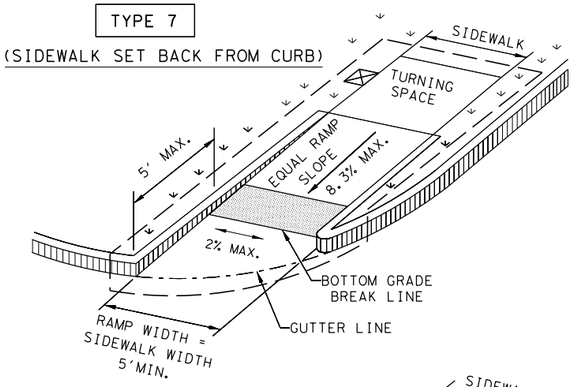

CROSS SLOPE NOT TO EXCEED 2% ON ANY PORTION OF RAMP, TURNING SPACE OR TRANSITION TO STREET.

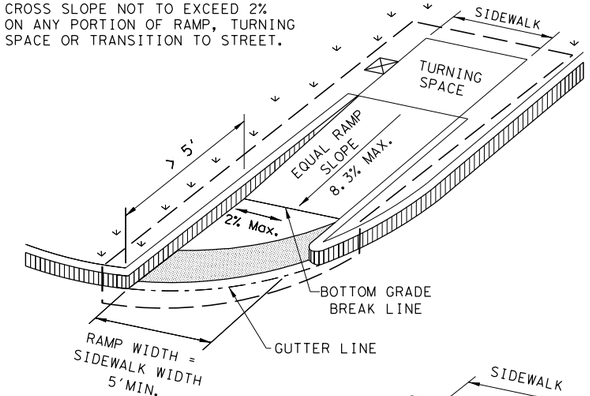

TYPE 10

(SIDEWALK ADJACENT TO CURB)

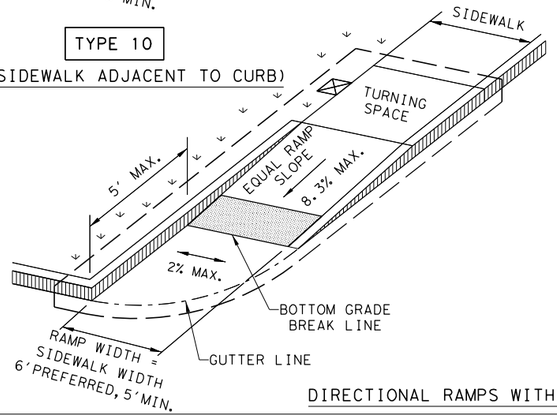

CROSS SLOPE NOT TO EXCEED 2% ON ANY PORTION OF RAMP, TURNING SPACE OR TRANSITION TO STREET.

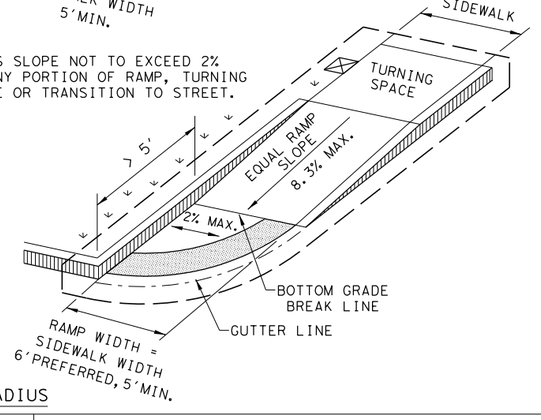

DIRECTIONAL RAMPS WITHIN RADIUS

TYPE 5

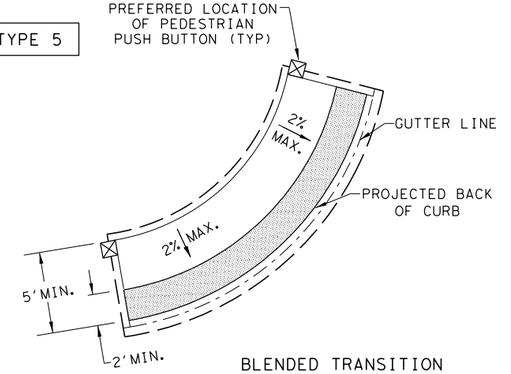

BLENDED TRANSITION
(FLUSH LANDING)

TYPE 21

INSTALL DETECTABLE WARNING SURFACE AT EACH END OF THE CUT-THROUGH RAMP WITH A MINIMUM 2' USUAL SIDEWALK SURFACE BETWEEN. IF MEDIAN IS LESS THAN 6' WIDE, ELIMINATE DETECTABLE WARNING SURFACES.

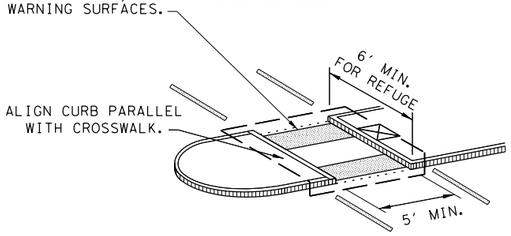

NOTE: CURB DETAILS ARE SHOWN ELSEWHERE IN THE PLANS.

TYPE 22

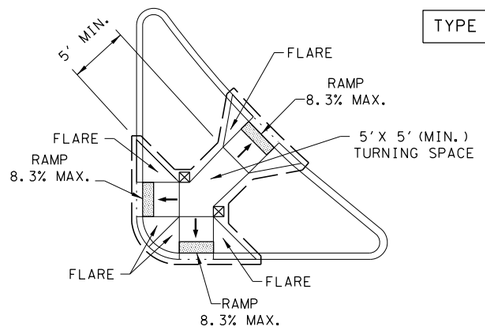

COMBINATION ISLAND RAMPS

BOTTOM GRADE BREAK OF CURB RAMP WILL NORMALLY BE AT GUTTER LINE. SURFACE SLOPES AT GRADE BREAKS SHALL BE FLUSH.

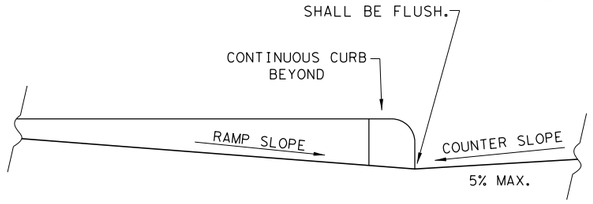

TYPICAL SECTION OF PERPENDICULAR CURB RAMP AT CONNECTION TO ROADWAY

NOTES / LEGEND:

SEE GENERAL NOTES ON SHEET 2 OF 4 FOR MORE INFORMATION.

DENOTES PLANTING OR NON-WALKING SURFACE NOT PART OF PEDESTRIAN CIRCULATION PATH.

DETECTABLE WARNING SURFACE

DENOTES PREFERRED LOCATION OF PEDESTRIAN PUSH BUTTON IF APPLICABLE.

GUTTER LINE

GRADE BREAK

RAMP LIMITS OF PAYMENT

Texas Department of Transportation

Design Division Standard

PEDESTRIAN FACILITIES CURB RAMPS

PED-18

FILE: ped18	DN: TxDOT	DW: VP	CK: KM	CK: PK & JG
© TxDOT: MARCH, 2002	CONT	SECT	JOB	HIGHWAY
REVISIONS				KLEIN RD
REVISED 08,2005 REVISED 06,2012 REVISED 01,2018	DIST	COUNTY		SHEET NO.
	SAT	GUADALUPE		154

DISCLAIMER:
The use of this standard is governed by the "Texas Engineering Practice Act". No warranty of any kind is made by TxDOT for any purpose whatsoever. TxDOT assumes no responsibility for the conversion of this standard to other formats or for incorrect results or damages resulting from its use.

DATE: 1/9/2020
FILE: H:\projects\510\30\03\Design\Civil\Standards\Roadway\ped18.dgn

GENERAL NOTES

CURB RAMPS

1. Install a curb ramp or blended transition at each pedestrian street crossing.
2. All slopes shown are maximum allowable. Cross slopes of 1.5% and lesser running should be used. Adjust curb ramp length or grade of approach sidewalks as directed.
3. Maximum allowable cross slope on sidewalk and curb ramp surfaces is 2%.
4. The minimum sidewalk width is 5'. Where the sidewalk is adjacent to the back of curb, a 6' sidewalk width is desirable. Where a 5' sidewalk cannot be provided due to site constraints, sidewalk width may be reduced to 4' for short distances. 5'x 5' passing areas at intervals not to exceed 200' are required.
5. Turning Spaces shall be 5'x 5' minimum. Cross slope shall be maximum 2%.
6. Clear space at the bottom of curb ramps shall be a minimum of 4'x 4' wholly contained within the crosswalk and wholly outside the parallel vehicular travel path.
7. Provide flared sides where the pedestrian circulation path crosses the curb ramp. Flared sides shall be sloped at 10% maximum, measured parallel to the curb. Returned curbs may be used only where pedestrians would not normally walk across the ramp, either because the adjacent surface is planted, substantially obstructed, or otherwise protected.
8. Additional information on curb ramp location, design, light reflective value and texture may be found in the latest draft of the Proposed Guidelines for Pedestrian Facilities in the Public Right of Way (PROWAG) as published by the U.S. Architectural and Transportation Barriers Compliance Board (Access Board).
9. To serve as a pedestrian refuge area, the median should be a minimum of 6' wide, measured from back of curbs. Medians should be designed to provide accessible passage over or through them.
10. Small channelization islands, which do not provide a minimum 5'x 5' landing at the top of curb ramps, shall be cut through level with the surface of the street.
11. Crosswalk dimensions, crosswalk markings and stop bar locations shall be as shown elsewhere in the plans. At intersections where crosswalk markings are not required, curb ramps shall align with theoretical crosswalks unless otherwise directed.
12. Provide curb ramps to connect the pedestrian access route at each pedestrian street crossing. Handrails are not required on curb ramps.
13. Curb ramps and landings shall be constructed and paid for in accordance with Item 531 "Sidewalks".
14. Place concrete at a minimum depth of 5" for ramps, flares and landings, unless otherwise directed.
15. Furnish and install No. 3 reinforcing steel bars at 18" o.c. both ways, unless otherwise directed.
16. Provide a smooth transition where the curb ramps connect to the street.
17. Curbs shown on sheet 1 within the limits of payment are considered part of the curb ramp for payment, whether it is concrete curb, gutter, or combined curb and gutter.
18. Existing features that comply with applicalble standards may remain in place unless otherwise shown on the plans.

DETECTABLE WARNING MATERIAL

19. Curb ramps must contain a detectable warning surface that consists of raised truncated domes complying with PROWAG. The surface must contrast visually with adjoining surfaces, including side flares. Furnish and install an approved cast-in-place dark brown or dark red detectable warning surface material adjacent to uncolored concrete, unless specified elsewhere in the plans.
20. Detectable Warning Materials must meet TxDOT Departmental Materials Specification DMS 4350 and be listed on the Material Producer List. Install products in accordance with manufacturer's specifications.
21. Detectable warning surfaces must be firm, stable and slip resistant.
22. Detectable warning surfaces shall be a minimum of 24 inches in depth in the direction of pedestrian travel, and extend the full width of the curb ramp or landing where the pedestrian access route enters the street.
23. Detectable warning surfaces shall be located so that the edge nearest the curb line is at the back of curb and neither end of that edge is greater than 5 feet from the back of curb. Detectable warning surfaces may be curved along the corner radius.
24. Shaded areas on Sheet 1 of 4 indicate the approximate location for the detectable warning surface for each curb ramp type.

DETECTABLE WARNING PAVERS (IF USED)

25. Furnish detectable warning paver units meeting all requirements of ASTM C-936, C-33. Lay in a two by two unit basket weave pattern or as directed.
26. Lay full-size units first followed by closure units consisting of at least 25 percent (25%) of a full unit. Cut detectable warning paver units using a power saw.

SIDEWALKS

27. Provide clear ground space at operable parts, including pedestrian push buttons. Operable parts shall be placed within unobstructed reach range specified in PROWAG section R406.
28. Place traffic signal or illumination poles, ground boxes, controller boxes, signs, drainage facilities and other items so as not to obstruct the pedestrian access route or clear ground space.
29. Street grades and cross slopes shall be as shown elsewhere in the plans.
30. Changes in level greater than 1/4 inch are not permitted.
31. The least possible grade should be used to maximize accessibility. The running slope of sidewalks and crosswalks within the public right of way may follow the grade of the parallel roadway. Where a continuous grade greater than five percent (5%) must be provided, handrails may be desirable to improve accessibility. Handrails may also be needed to protect pedestrians from potentially hazardous conditions. If provided, handrails shall comply with PROWAG R409.
32. Handrail extensions shall not protrude into the usable landing area or into intersecting pedestrian routes.
33. Driveways and turnouts shall be constructed and paid for in accordance with Item "Intersections, Driveways and Turnouts". Sidewalks shall be constructed and paid for in accordance with Item, "Sidewalks".
34. Sidewalk details are shown elsewhere in the plans.

DETECTABLE WARNING SURFACE DETAILS

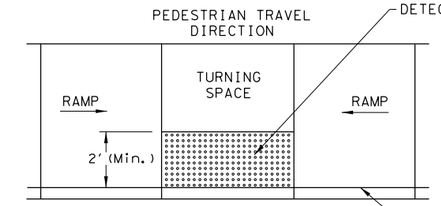

PARALLEL CURB RAMP

TYPICAL PLACEMENT OF DETECTABLE WARNING SURFACE ON LANDING AT STREET EDGE.

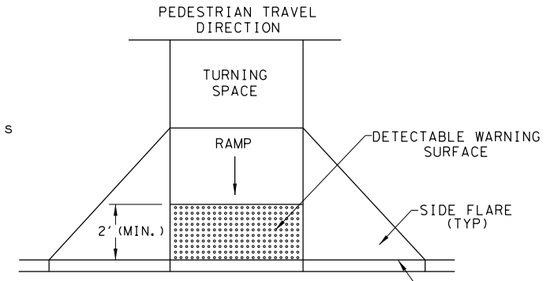

PERPENDICULAR CURB RAMP

TYPICAL PLACEMENT OF DETECTABLE WARNING SURFACE ON SLOPING RAMP RUN.

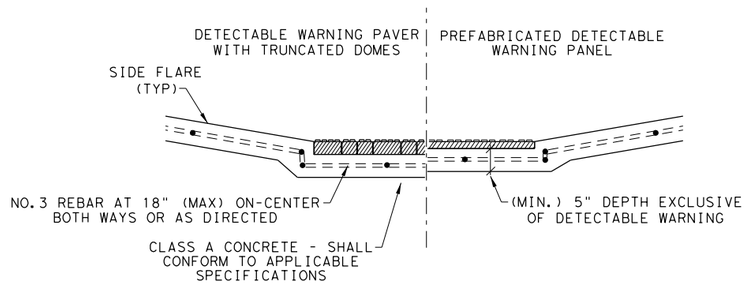

SECTION VIEW DETAIL
CURB RAMP AT DETECTIBLE WARNINGS

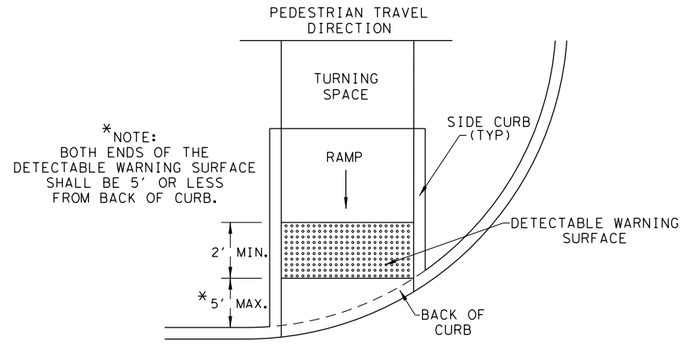

DIRECTIONAL CURB RAMP

TYPICAL PLACEMENT OF DETECTABLE WARNING SURFACE ON SLOPING RAMP RUN.

Texas Department of Transportation | Design Division Standard

PEDESTRIAN FACILITIES CURB RAMPS

PED-18

FILE: ped18	DN: TxDOT	DW: VP	CK: KM	CK: PK & JG	
© TxDOT: MARCH, 2002	CONT	SECT	JOB	HIGHWAY	
REVISIONS				KLEIN RD	
REVISED 08,2005 REVISED 06,2012 REVISED 01,2018	DIST	COUNTY		SHEET NO.	
	SAT	GUADALUPE		155	

DISCLAIMER:
The use of this standard is governed by the "Texas Engineering Practice Act". No warranty of any kind is made by TxDOT for any purpose whatsoever. TxDOT assumes no responsibility for the conversion of this standard to other formats or for incorrect results or damages resulting from its use.

DATE: 1/9/2020
FILE: H:\projects\510\30\03\Design\Civil\Standards\Roadway\ped18.dgn

SIDEWALK TREATMENT AT DRIVEWAYS

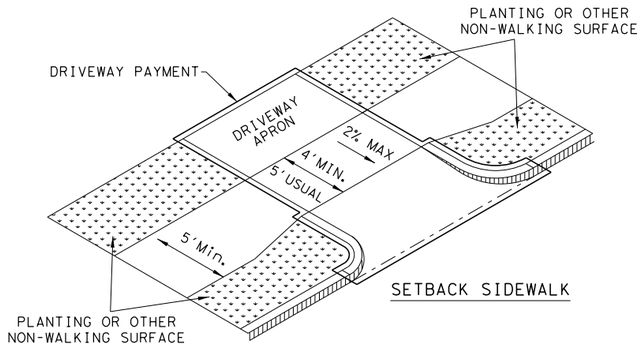

SETBACK SIDEWALK

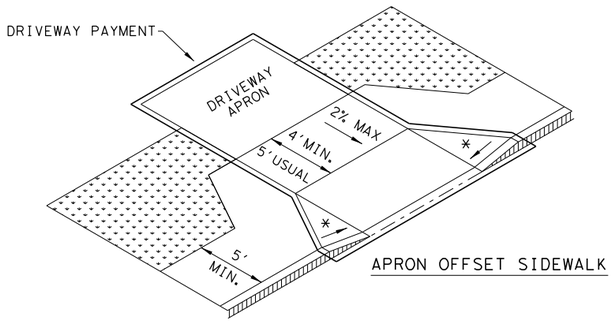

APRON OFFSET SIDEWALK

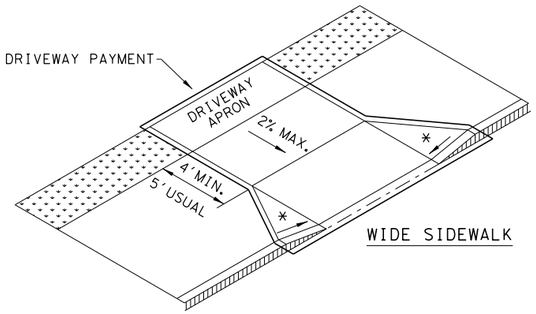

WIDE SIDEWALK

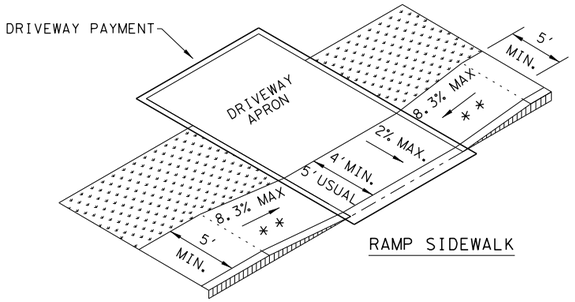

RAMP SIDEWALK

NOTES:

* WHERE DRIVEWAYS CROSS THE PEDESTRIAN ROUTE, SIDES SHALL BE FLARED AT 10% MAX SLOPE.

* * IF CURB HEIGHT IS GREATER THAN 6 INCHES, USE GRADE LESS THAN OR EQUAL TO 5%. HANDRAIL AND DETECTABLE WARNING ARE NOT REQUIRED.

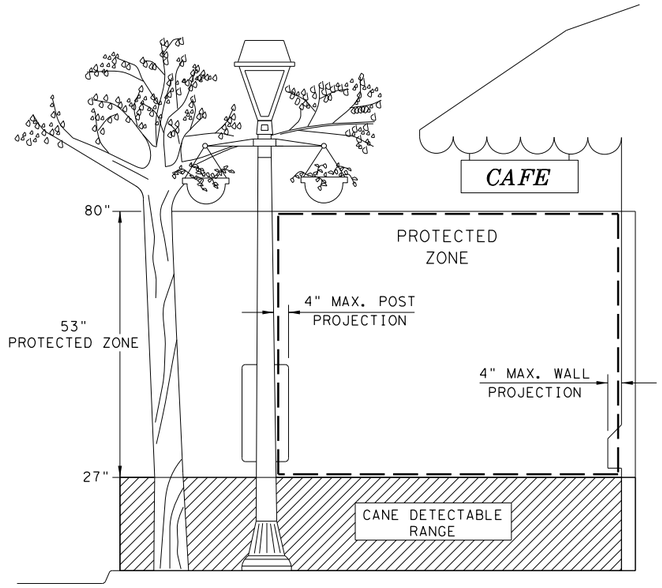

PROTECTED ZONE

NOTE: IN PEDESTRIAN CIRCULATION AREA, MAXIMUM 4" PROJECTION FOR POST OR WALL MOUNTED OBJECTS BETWEEN 27" AND 80" ABOVE THE SURFACE.

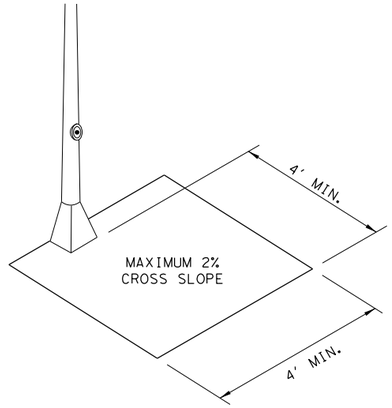

CLEAR SPACE ADJACENT TO PEDESTRIAN PUSH BUTTON

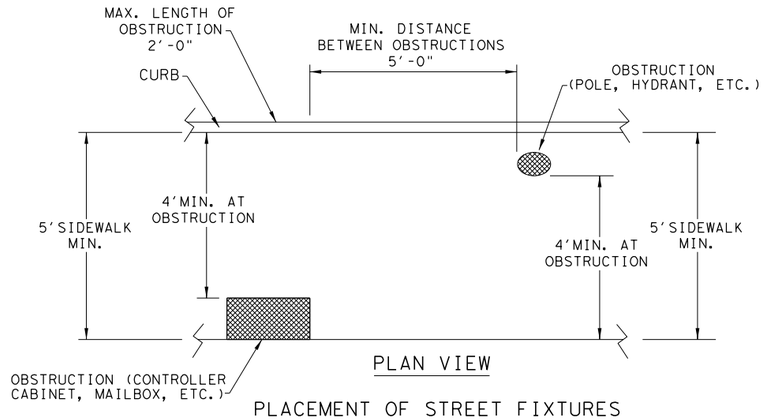

PLAN VIEW

PLACEMENT OF STREET FIXTURES

NOTE: ITEMS NOT INTENDED FOR PUBLIC USE. MINIMUM 4' X 4' CLEAR GROUND SPACE REQUIRED AT PUBLIC USE FIXTURES.

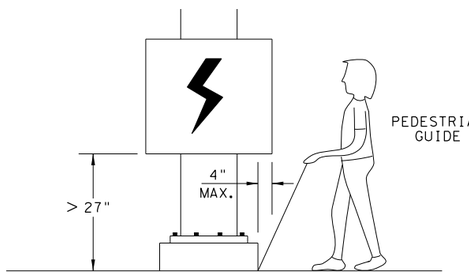

WHEN AN OBSTRUCTION OF A HEIGHT GREATER THAN 27" FROM THE SURFACE WOULD CREATE A PROTRUSION OF MORE THAN 4" INTO THE PEDESTRIAN CIRCULATION AREA, CONSTRUCT ADDITIONAL CURB OR FOUNDATION AT THE BOTTOM TO PROVIDE A MAXIMUM 4" OVERHANG.

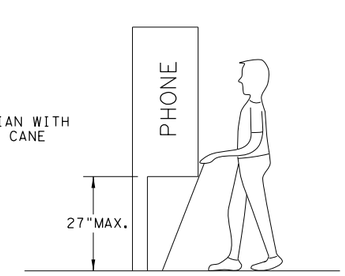

PROTRUDING OBJECTS OF A HEIGHT ≤ 27" ARE DETECTABLE BY CANE AND DO NOT REQUIRE ADDITIONAL TREATMENT.

DETECTION BARRIER FOR VERTICAL CLEARANCE < 80"

Texas Department of Transportation

Design Division Standard

PEDESTRIAN FACILITIES CURB RAMPS

PED-18

FILE: ped18	DN: TxDOT	DW: VP	CK: KM	CK: PK & JG	
© TxDOT: MARCH, 2002	CONT	SECT	JOB	HIGHWAY	
REVISIONS				KLEIN RD	
REVISED 08,2005 REVISED 06,2012 REVISED 01,2018	DIST	COUNTY		SHEET NO.	
	SAT	GUADALUPE		156	

DISCLAIMER:
The use of this standard is governed by the "Texas Engineering Practice Act". No warranty of any kind is made by TxDOT for any purpose whatsoever. TxDOT assumes no responsibility for the conversion of this standard to other formats or for incorrect results or damages resulting from its use.

DATE: 1/9/2020
FILE: H:\projects\510\30\03\Design\Civil\Standards\Roadway\ped18.dgn

TYPICAL CROSSING LAYOUTS
SEE SHEET 1 OF 4 FOR DETAILS AND DIMENSIONS

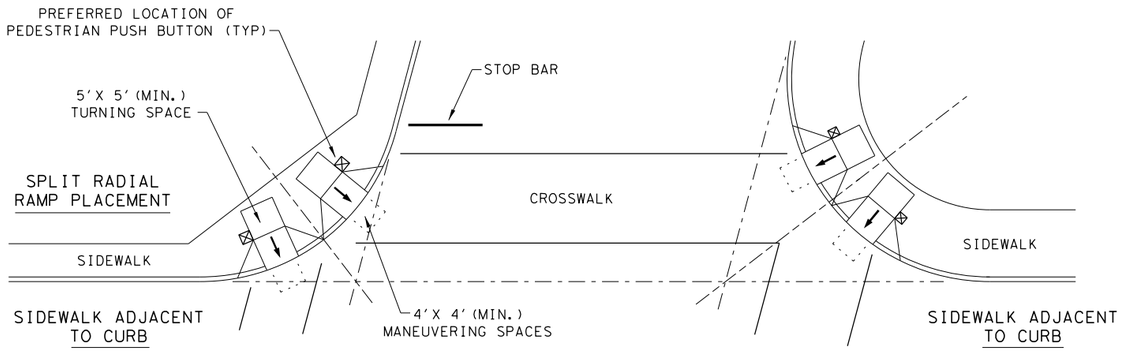

SKEWED INTERSECTION WITH "LARGE" RADIUS

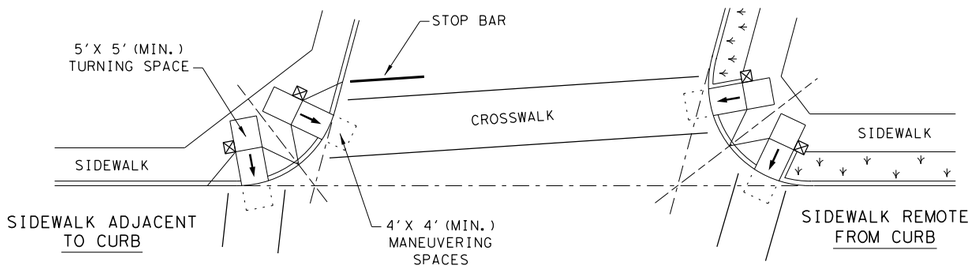

SKEWED INTERSECTION WITH "SMALL" RADIUS

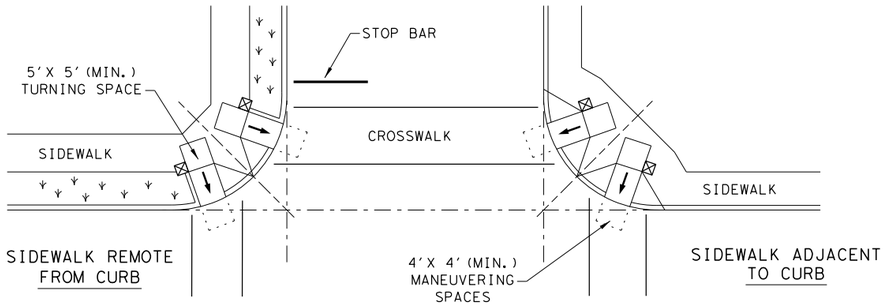

NORMAL INTERSECTION WITH "SMALL" RADIUS

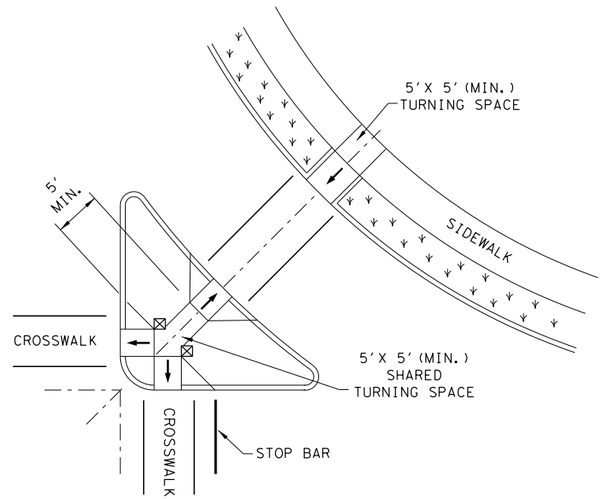

AT INTERSECTION
W/FREE RIGHT TURN & ISLAND

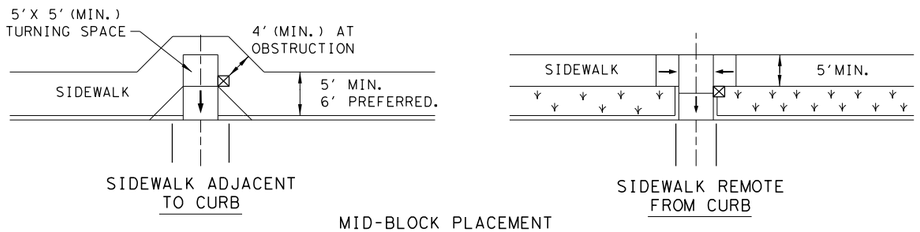

MID-BLOCK PLACEMENT
PERPENDICULAR RAMPS

LEGEND:

SHOWS DOWNWARD SLOPE. →

DENOTES PREFERRED LOCATION OF PEDESTRIAN PUSH BUTTON (IF APPLICABLE). ☒

DENOTES PLANTING OR NON-WALKING SURFACE NOT PART OF PEDESTRIAN CIRCULATION PATH.

SHEET 4 OF 4

Texas Department of Transportation | Design Division Standard

PEDESTRIAN FACILITIES
CURB RAMPS
PED-18

FILE: ped18	DN: TxDOT	DW: VP	CK: KM	CK: PK & JG
© TxDOT: MARCH, 2002	CONT	SECT	JOB	HIGHWAY
REVISIONS				KLEIN RD
REVISED 08,2005 REVISED 06,2012 REVISED 01,2018	DIST	COUNTY		SHEET NO.
	SAT	GUADALUPE		157

DISCLAIMER:
The use of this standard is governed by the "Texas Engineering Practice Act". No warranty of any kind is made by TxDOT for any purpose whatsoever. TxDOT assumes no responsibility for the conversion of this standard to other formats or for incorrect results or damages resulting from its use.

DATE: 1/9/2020
FILE: H:\projects\510\30\03\Design\Civil\Standards\Roadway\prd13.dgn

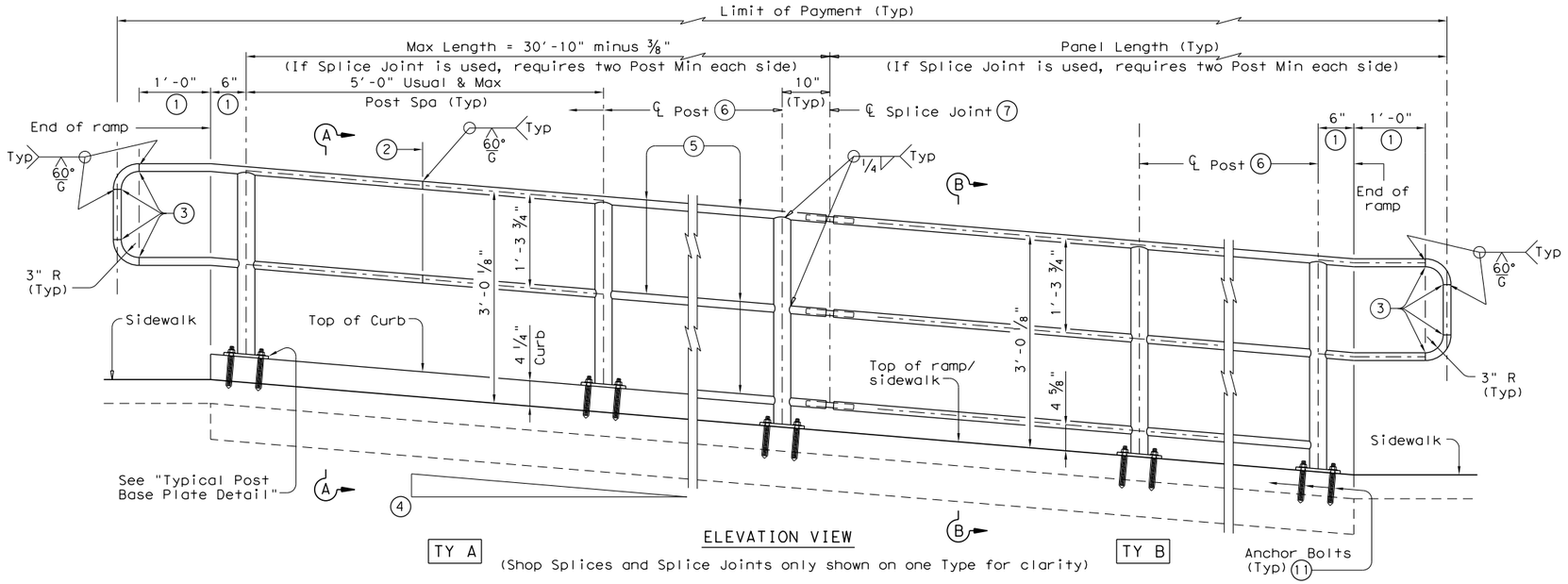

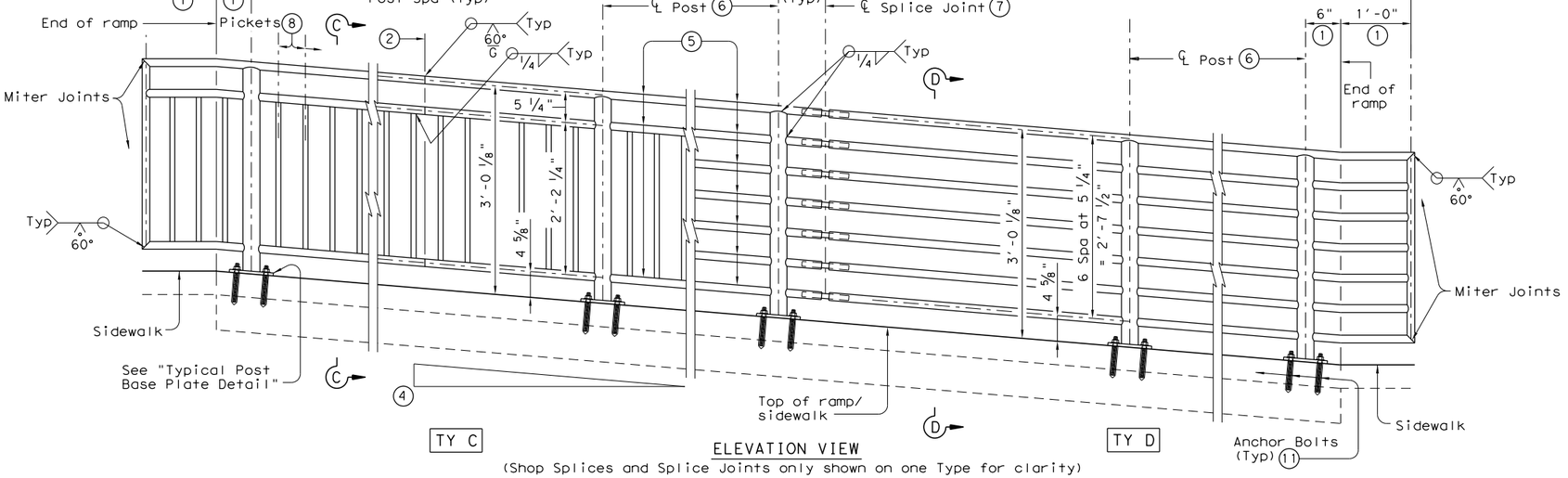

RECOMMENDED USAGE (9)(10)	
Dropoff Height/ Condition	Recommended Rail Options
< 30" dropoff	TY A, TY B, TY C, or TY D
≥ 30" dropoff, or along Bike Path	TY E or TY F

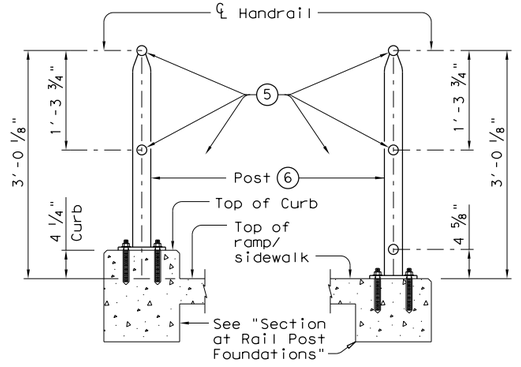

SECTION A-A
(Showing Handrail TY A)

SECTION B-B
(Showing Handrail TY B)

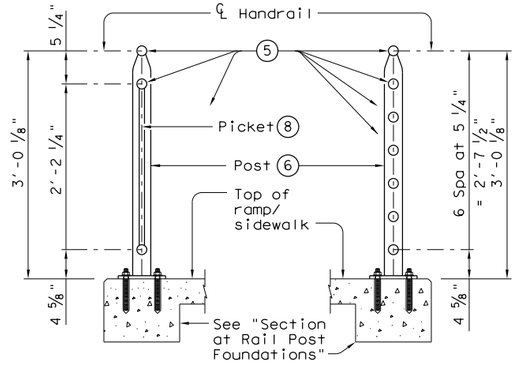

SECTION C-C
(Showing Handrail TY C)

SECTION D-D
(Showing Handrail TY D)

(1) Parallel to ground.

(2) One shop splice per panel is permitted with minimum 85 percent penetration. The weld may be square groove or single vee groove. Grind smooth.

(3) Shop splice is permitted with minimum 85 percent penetration. The weld may be square groove or single vee groove. Grind smooth.

(4) See Ramp Details located elsewhere in plans for ramp slope and dimensions. Maximum ramp slope will not exceed 8.3 percent. Level landing required for each 30" rise if grade exceeds 5 percent.

(5) 1 ½" Dia. Standard Pipe (1.900" O.D., 0.145" wall thickness). Parallel to ramp / sidewalk. Provide holes as needed in 1 ½" Dia. pipe for galvanizing drainage and venting.

(6) 2 ½" Dia. Standard Pipe (2.875" O.D., 0.203" wall thickness). See "Post Mount Detail" for crimping and trimming post to fit Dia. of top rail. Provide holes as needed in post for galvanizing drainage and venting. Plumb all posts.

(7) See "Handrail Fabrication Details" for Splice Joints.

(8) ℄ ⅝" Dia. Round Bar equal spacing at 4 ½" Max. Plumb all pickets.

(9) When needed for accessibility (grade > 5 percent) or as needed for pedestrian safety.

(10) Not to be used on bridges.

(11) See "General Notes" for anchor bolt information.

SHEET 1 OF 3

Texas Department of Transportation

Design Division Standard

PEDESTRIAN HANDRAIL DETAILS

PRD-13

FILE: prd13.dgn	DN: TxDOT	CK: AM	DW: JTR	CK: CGL
©TxDOT Decmeber 2006	CONT	SECT	JOB	HIGHWAY
REVISIONS REVISED MAY, 2013 (VP)				KLEIN RD
	DIST	COUNTY		SHEET NO.
	SAT	GUADALUPE		158

DISCLAIMER:
The use of this standard is governed by the "Texas Engineering Practice Act". No warranty of any kind is made by TxDOT for any purpose whatsoever. TxDOT assumes no responsibility for the conversion of this standard to other formats or for incorrect results or damages resulting from its use.

DATE: 1/9/2020
FILE: H:\projects\510\30\03\Design\Civil\Standards\Roadway\prd13.dgn

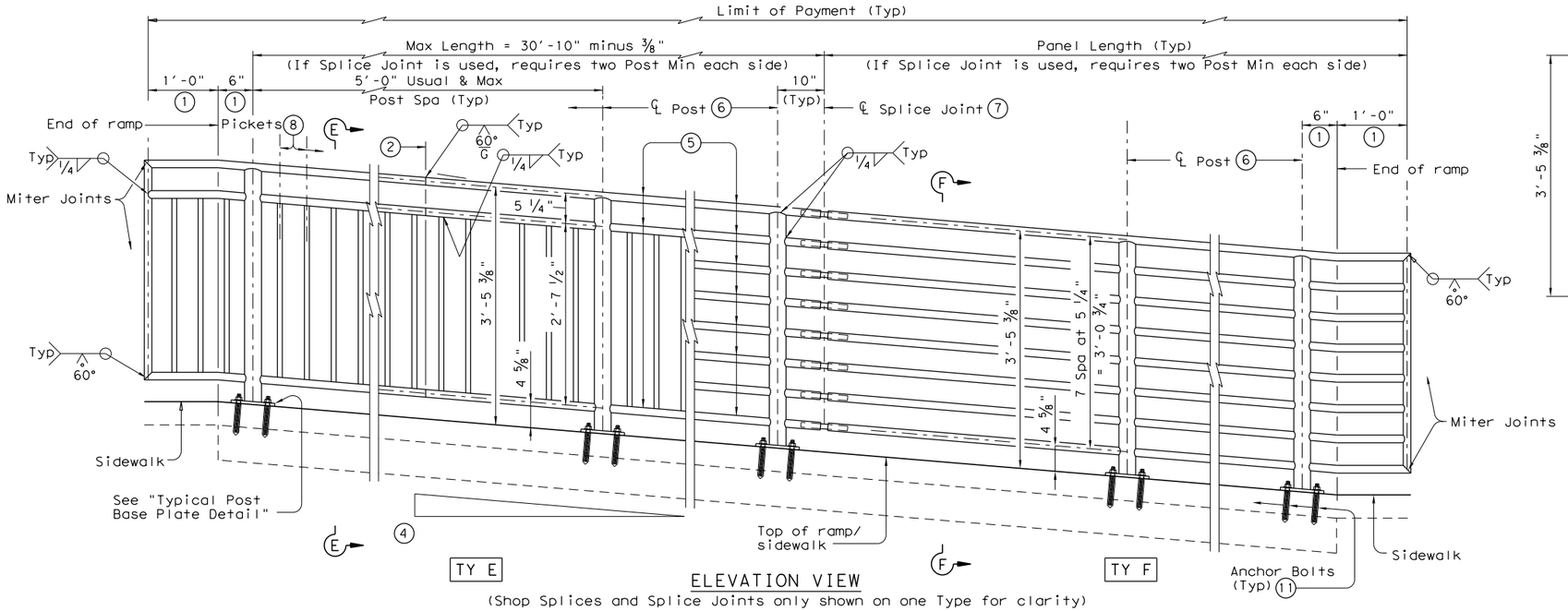

ELEVATION VIEW

(Shop Splices and Splice Joints only shown on one Type for clarity)

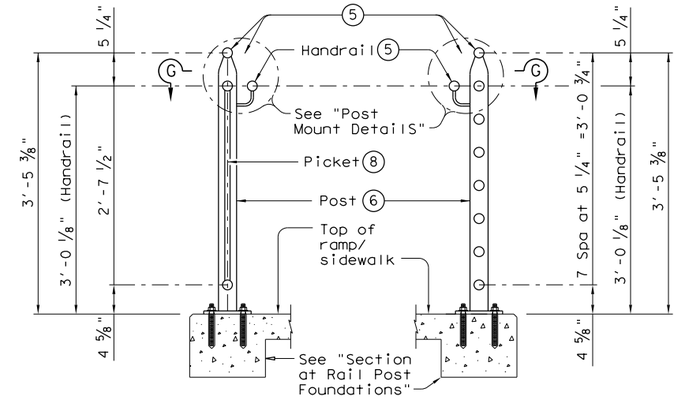

SECTION E-E
(Showing Handrail TY E)

SECTION F-F
(Showing Handrail TY F)

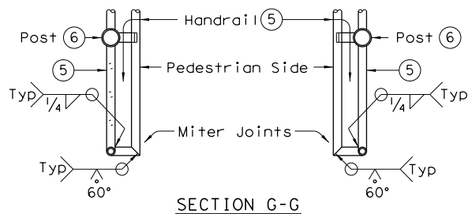

SECTION G-G
(Showing Handrail Termination)

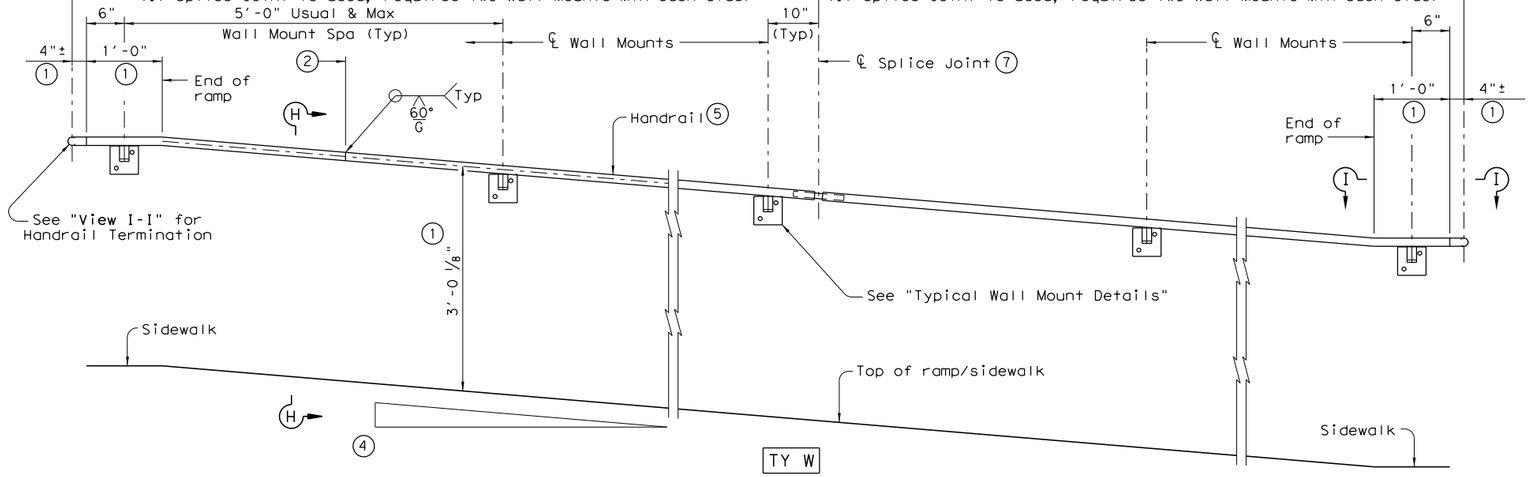

ELEVATION VIEW

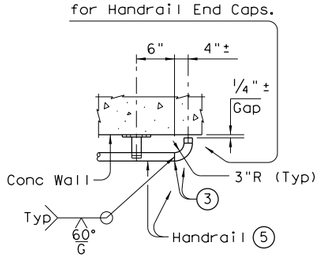

VIEW I-I
(Showing Handrail Termination)

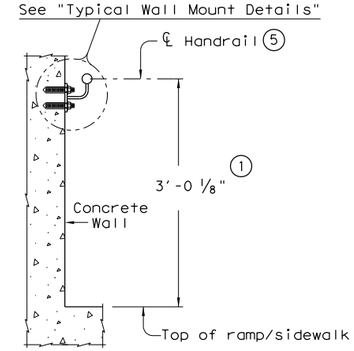

SECTION H-H
(Showing Handrail TY W)

(1) Parallel to ground.

(2) One shop splice per panel is permitted with minimum 85 percent penetration. The weld may be square groove or single vee groove. Grind smooth.

(3) Shop splice is permitted with minimum 85 percent penetration. The weld may be square groove or single vee groove. Grind smooth.

(4) See Ramp Details located elsewhere in plans for ramp slope and dimensions. Maximum ramp slope will not exceed 8.3 percent. Level landing required for each 30" rise if grade exceeds 5 percent.

(5) 1 ½" Dia. Standard Pipe (1.900" O.D., 0.145" wall thickness). Parallel to ramp / sidewalk. Provide holes as needed in 1 ½" Dia. pipe for galvanizing drainage and venting.

(6) 2 ½" Dia. Standard Pipe (2.875" O.D., 0.203" wall thickness). See "Post Mount Detail" for crimping and trimming post to fit Dia. of top rail. Provide holes as needed in post for galvanizing drainage and venting. Plumb all posts.

(7) See "Handrail Fabrication Details" for Splice Joints.

(8) ℄ ⅝" Dia. Round Bar equal spacing at 4 ½" Max. Plumb all pickets.

(11) See "General Notes" for anchor bolt information.

Texas Department of Transportation — Design Division Standard

PEDESTRIAN HANDRAIL DETAILS

PRD-13

FILE: prd13.dgn	DN: TxDOT	CK: AM	DW: JTR	CK: CGL
©TxDOT December 2006	CONT	SECT	JOB	HIGHWAY
REVISIONS REVISED MAY, 2013 (VP)				KLEIN RD
	DIST	COUNTY		SHEET NO.
	SAT	GUADALUPE		159

DISCLAIMER:
The use of this standard is governed by the "Texas Engineering Practice Act". No warranty of any kind is made by TxDOT for any purpose whatsoever. TxDOT assumes no responsibility for the conversion of this standard to other formats or for incorrect results or damages resulting from its use.

DATE: 1/9/2020
FILE: H:\projects\510\30\03\Design\Civil\Standards\Roadway\prd13.dgn

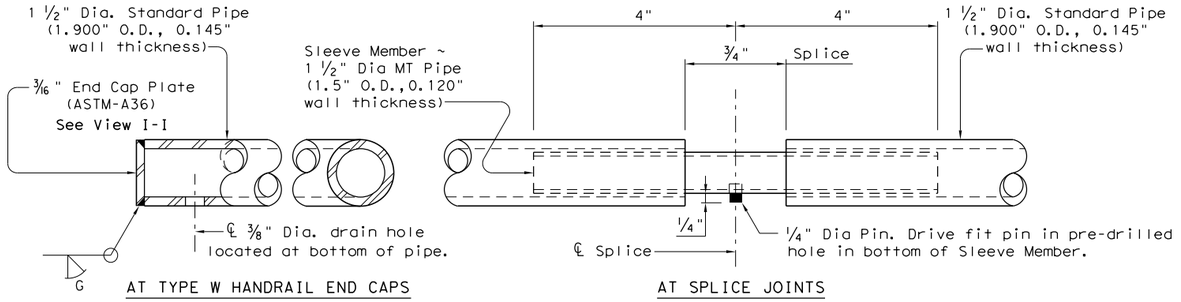

AT TYPE W HANDRAIL END CAPS

AT SPLICE JOINTS

HANDRAIL FABRICATION DETAILS

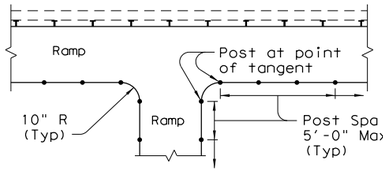

RAMP INTERSECTION

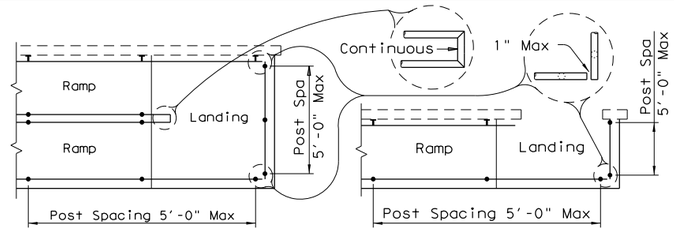

MULTI-LEVEL RAMP

SINGLE-LEVEL RAMP

PLAN SHOWING RAIL AT RAMP CONDITIONS

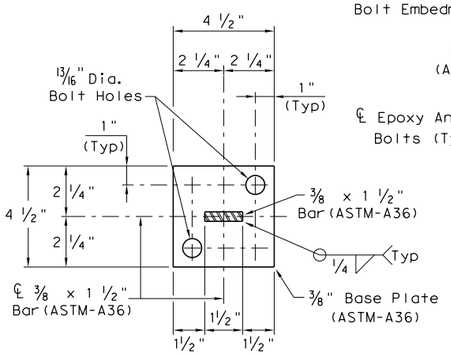

SECTION J-J
(Anchor Bolts not shown for clarity)

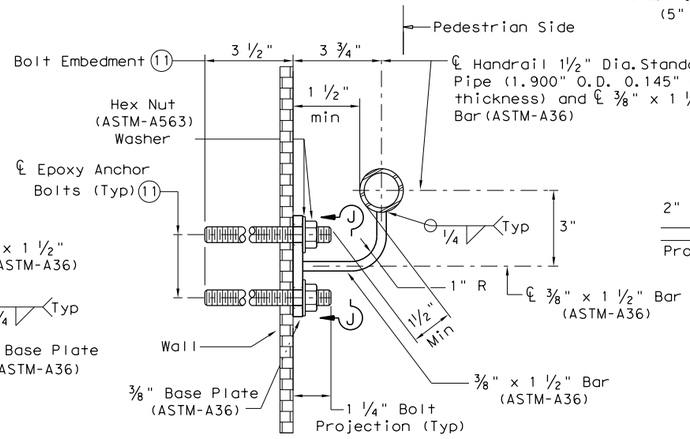

SECTION AT WALL MOUNT

TYPICAL WALL MOUNT DETAILS

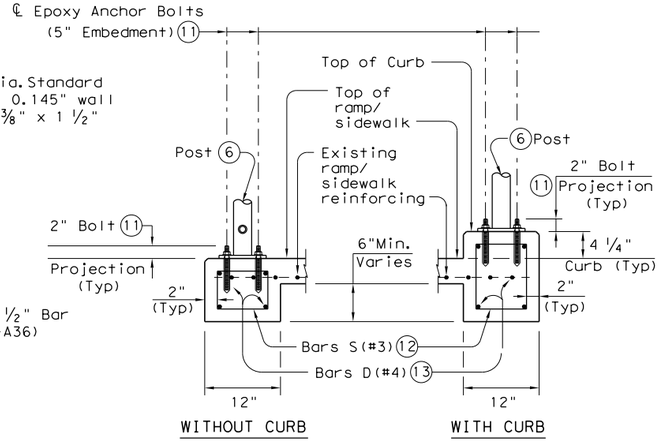

SECTION AT RAIL POST FOUNDATIONS

GENERAL NOTES

Designed according to ADAAG, Texas Accessibility Standards, Uniform Building Code, and AASHTO LRFD Specifications.

Handrail anchorage details shown on this standard may require modification for select structure types. See appropriate details elsewhere in plans for these modifications.

Pipe will conform to ASTM-A53 Grade B or A500 Grade B. Steel plates and steel bars will conform to ASTM-A36. Mechanical tubing (MT) will conform to ASTM A513 Grade 1015 or higher. Galvanize all steel components except reinforcing steel unless noted otherwise.

Concrete for foundations will be in accordance with Item 531 "Sidewalks". All reinforcing steel must be Grade 60. Bar laps, where required, will be as follows: Uncoated ~ #4 = 1'-5" Epoxy coated ~ #4 = 2'-1"

When the plans require painted steel, follow the requirements for painting galvanized steel in Item 446, "Cleaning and Painting Steel". Sleeve Members will receive galvanization and only get field painted after installation unless directed otherwise by Engineer.

Epoxy Anchor bolts for wall mount and post base plate will be ⅝" Dia. ASTM A36 threaded rods with one hex nut and one hardened steel washer at each bolt. ⅝" Dia. threaded rod embedment depth for wall mounts is 3 ½" and embedment depth for post base plate is 5".

Embed threaded rods into concrete with a Type III (Class C) epoxy meeting the requirements of DMS-6100, "Epoxies and Adhesives". Mix and dispense adhesive with the manufacturer's static mixing nozzle/dual cartridge system. Core drill holes (percussion drilling not permitted).

At the contractor's option the post base plate anchor bolts may be cast with the Ramp/Sidewalk (See Cast-in-Place Anchor Bolt Options).

Optional cast-in-place anchor bolts will be ⅝" Dia ASTM A307 Grade A bolts (or A36 threaded rods with one tack welded hex nut each) with one hex nut and one hardened steel washer at each bolt. Embedment depth of cast-in-place bolt will be 8" for post base plate.

Handrails and any wall or other surface adjacent to them will be free of any sharp or abrasive elements.

Submit shop drawings to the Engineer unless otherwise noted. For curved handrail applications, fabricate the handrail to the curve if radius is less than 600 ft. Shop drawings are required when rail is fabricated to the curve.

For all handrails, erection drawings will be submitted to the Engineer for approval to ensure proper installation.

Drawings will show handrail mount locations with bolts setting, spacing, ramp slope, and/or splice joint locations, and handrail lengths with identification showing where each handrail goes on the layout.

Payment for concrete sidewalks or curb ramps will be paid for in accordance with Item 531 "Sidewalks".

Payment for all items shown is to be included in unit price bid in accordance with Item 450 "Railing" of the type specified.

All exposed edges will be rounded or chamfered to approximately ⅛" by grinding.

(5) 1 ½" Dia. Standard Pipe (1.900" O.D., 0.145" wall thickness). Parallel to ramp/sidewalk. Provide holes as needed in 1 ½" Dia. pipe for galvanizing drainage and venting.

(6) 2 ½" Dia. Standard Pipe (2.875" O.D., 0.203" wall thickness). Plumb all posts. See "Post Mount Detail" for crimping and trimming post to fit the diamenter of top rail. Provide holes as needed in post for galvanizing drainage and venting.

(11) See "General Notes" for anchor bolt information.

(12) Bars S(#3) spaced at 12" Max (Spaced 3" from outside edge of overall length of Ramp/Sidewalk).

(13) Provide 1 ½" end cover to Bars D(#4) from outside edge of overall length of Ramp/Sidewalk.

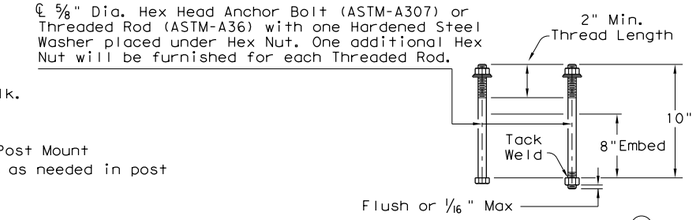

CAST-IN-PLACE ANCHOR BOLT OPTIONS
(Used for Post Base Plate only)

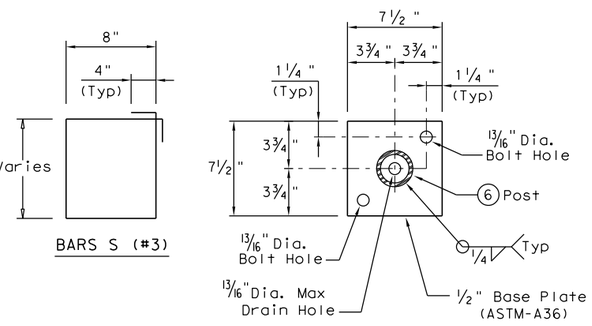

TYPICAL POST BASE PLATE DETAIL

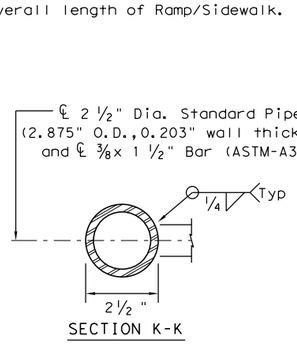

SECTION K-K

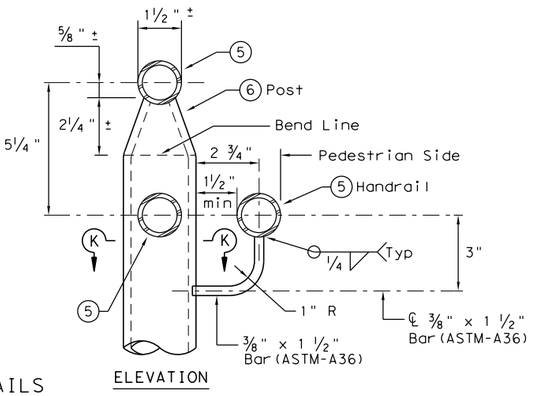

ELEVATION

POST MOUNT DETAILS

Texas Department of Transportation

Design Division Standard

PEDESTRIAN HANDRAIL DETAILS

PRD-13

FILE: prd13.dgn	DN: TxDOT	CK: AM	DW: JTR	CK: CGL
©TxDOT December 2006	CONT	SECT	JOB	HIGHWAY
REVISIONS				KLEIN RD
REVISED MAY, 2013 (VP)	DIST	COUNTY		SHEET NO.
	SAT	GUADALUPE		160

DISCLAIMER:
The use of this standard is governed by the "Texas Engineering Practice Act". No warranty of any kind is made by TxDOT for any purpose whatsoever. TxDOT assumes no responsibility for the conversion of this standard to other formats or for incorrect results or damages resulting from its use.

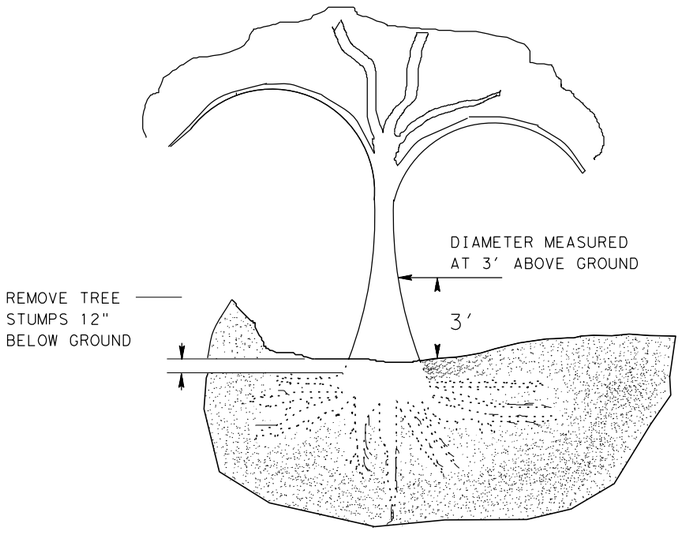

TREE REMOVAL

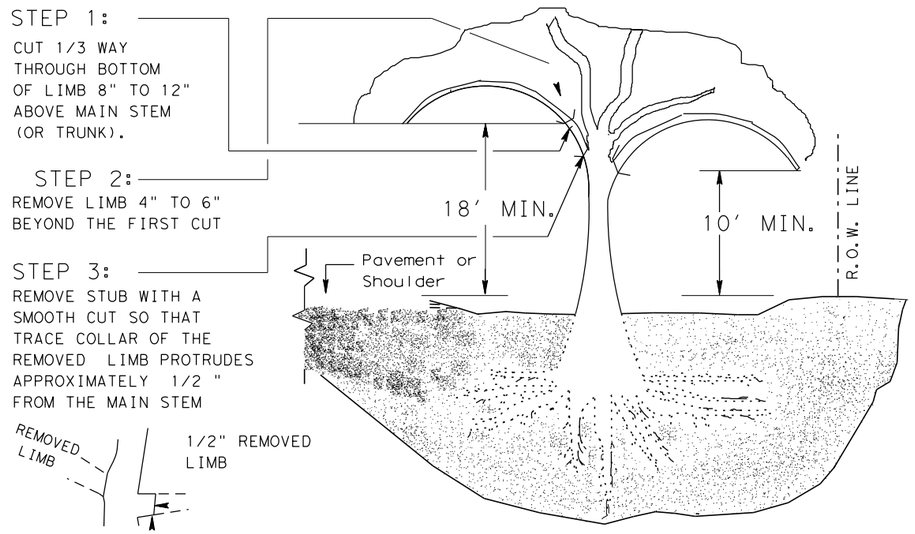

TREE TRIMMING

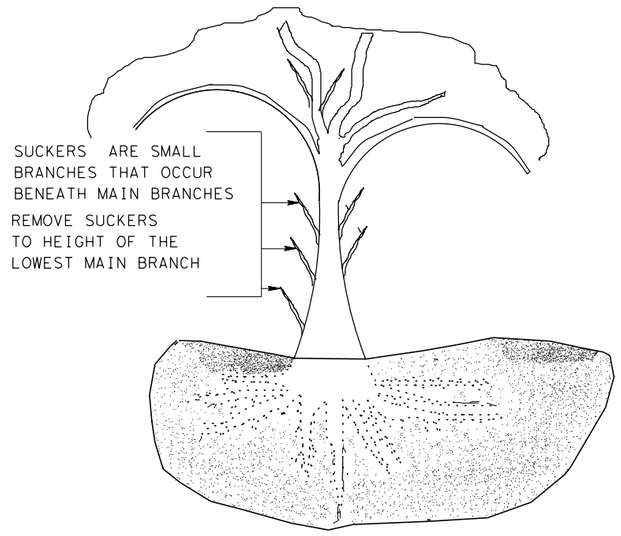

STEPS 1, 2 AND 3 APPLY WHEN REMOVING LIMBS 2" IN DIAMETER OR LARGER.

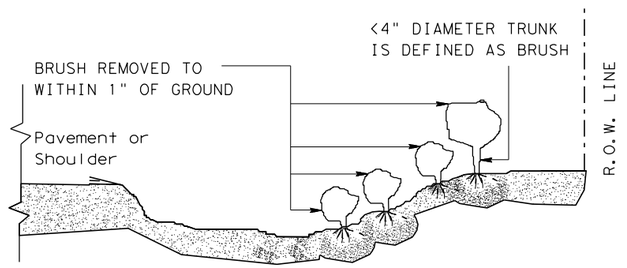

BRUSH REMOVAL

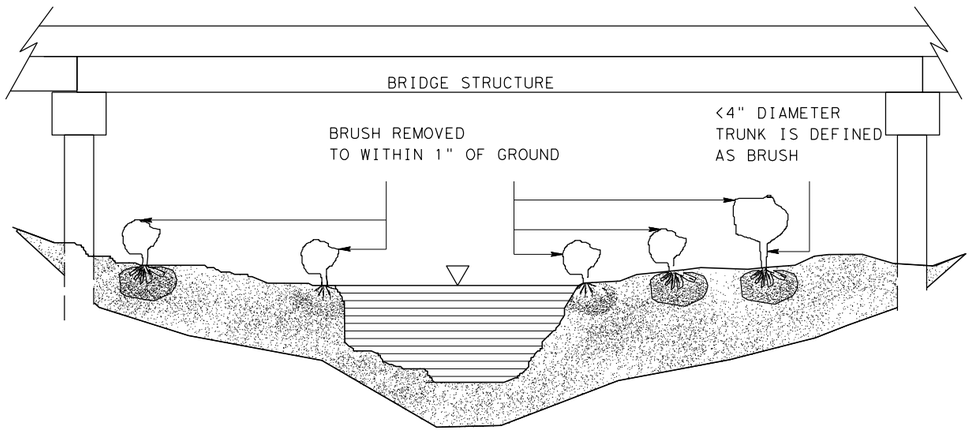

BRUSH REMOVAL UNDER BRIDGE AND IN CHANNEL

GENERAL NOTES:

TREE TRIMMING

1. TRIM AND REMOVE ALL TREE LIMBS ON THE PAVEMENT SIDE OF THE TRUNK 18' ABOVE THE PAVEMENT OR BRIDGE DECK ELEVATION, UNLESS OTHERWISE SHOWN ON THE PLANS.

2. TRIM AND REMOVE ALL TREE LIMBS BETWEEN THE TRUNK AND R.O.W. LINE 10' ABOVE NATURAL GROUND, TERRAIN OR OTHER STRUCTURE ELEVATION, UNLESS OTHERWISE SHOWN ON THE PLANS.

TREE REMOVAL

3. FOR TREES MARKED FOR REMOVAL, THE DIAMETER OF TREES ARE DETERMINED BY MEASUREMENT OF THE TRUNK CIRCUMFERENCE 3' ABOVE THE GROUND. TREES WITH TRUNKS OF LESS THAN 4" DIAMETER ARE CONSIDERED TO BE BRUSH. TREES WITH MULTIPLE TRUNKS AT THE POINT OF MEASUREMENT ARE MEASURED AND PAID FOR SEPARATELY.

4. MEASUREMENTS FOR PAYMENT OF TREE DIAMETERS ARE DIVIDED INTO THE RANGES SHOWN IN TABLE 1.

TABLE 1
TREE TRUNK SIZE FOR TREE REMOVAL PAYMENT

PAY ITEM	RANGE FOR PAY ITEMS			
	TRUNK DIAMETER *		TRUNK CIRCUMFERENCE	
	LOWER LIMIT IS GREATER THAN	UPPER LIMIT IS LESS THAN OR EQUAL TO	LOWER LIMIT IS GREATER THAN	UPPER LIMIT IS LESS THAN OR EQUAL TO
752 6005	4	12	12 1/2	37 1/2
752 6006	12	18	37 1/2	56 1/2
752 6007	18	24	56 1/2	75 1/2
752 6008	24	30	75 1/2	94
752 6009	30	36	94	113
752 6010	36	42	113	132
752 6011	42	48	132	151
752 6012	48	60	151	188 1/2
752 6013	60	72	188 1/2	226
752 6019	72	84	226	264
	84	GREATER THAN 84	264	NOT APPLICABLE

*SEE GENERAL NOTE #3.

Texas Department of Transportation — Maintenance Division Standard

TREE AND BRUSH REMOVAL

TRB-15(1)

FILE:	DN: JEO	CK: LJB	DW: JEO	CK:
© TxDOT MARCH 2015	CONT	SECT	JOB	HIGHWAY
REVISIONS				KLEIN RD
Revised table 1 to 2014 Specification	DIST	COUNTY		SHEET NO.
	SAT	GUADALUPE		161

1/9/2020 3:45:06 PM
H:\projects\5103003\Design\Civil\Standards\Roadway\trb15.dgn

DISCLAIMER:
THE USE OF THIS STANDARD IS GOVERNED BY THE "TEXAS ENGINEERING PRACTICE ACT". NO WARRANTY OF ANY KIND IS MADE BY TXDOT FOR ANY PURPOSE WHATSOEVER. TXDOT ASSUMES NO RESPONSIBILITY FOR THE CONVERSION OF THIS STANDARD TO OTHER FORMATS OR FOR INCORRECT RESULTS OR DAMAGES RESULTING FROM ITS USE.

DATE: 1/9/2020
FILE: H:\Projects\510\30\03\Design\Civil\Standards\Roadway\gf3119.dgn

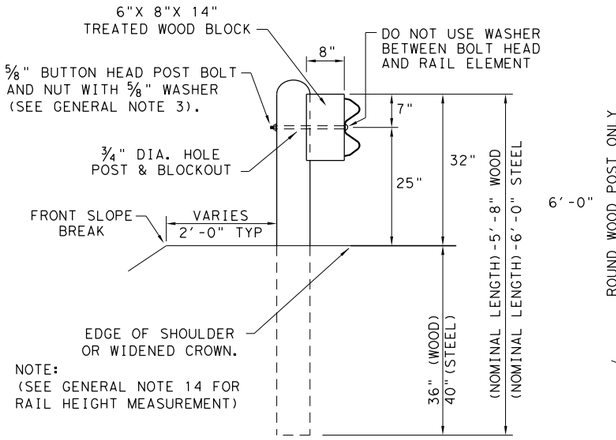

TYPICAL POST PLACEMENT

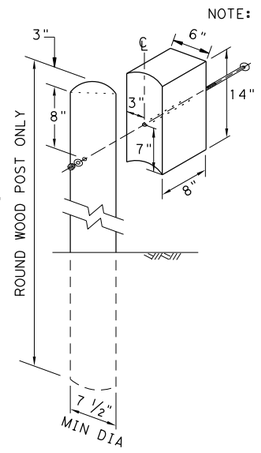

WOOD BLOCK TO
ROUND WOOD POST

NOTE: TOENAIL WITH ONE 16D GALV. NAIL TO PREVENT BLOCK ROTATION.

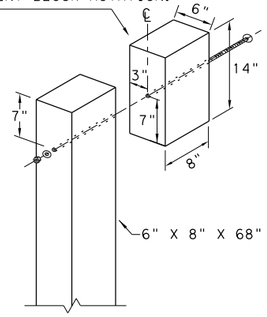

WOOD BLOCK TO
RECTANGULAR WOOD POST

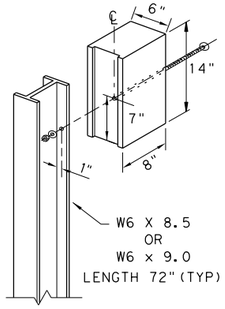

ROUTED WOOD BLOCK
TO I-BEAM STEEL POST

GENERAL NOTES

1. THE TYPE OF POST (ROUND WOOD POST, RECTANGULAR WOOD POST, OR STEEL POST) WILL BE AS SHOWN IN THE PLANS. THE EXACT POSITION OF MBGF SHALL BE SHOWN IN THE PLANS OR AS DIRECTED BY THE ENGINEER. STEEL POSTS TO BE GALVANIZED IN ACCORDANCE WITH ITEM 445, "GALVANIZING."
2. RAIL ELEMENTS SHALL MEET THE REQUIREMENTS OF ITEM 540,"METAL BEAM GUARD FENCE" EXCEPT AS MODIFIED IN THE PLANS. THE CONTRACTOR MAY FURNISH RAIL ELEMENTS OF 25'- 0", OR 12'- 6" (NOM.) LENGTHS. RAIL ELEMENTS MAY HAVE SLOTTED HOLES AT 3'-1 ½" C-C OR 6'-3" C-C. A SPECIAL LENGTH OF RAIL MAY BE MANUFACTURED TO ACCOMMODATE THE DOWNSTREAM ANCHOR TERMINAL (DAT) AND THE TRANSITION SECTIONS OF GUARDRAIL.
3. BUTTON HEAD "POST BOLTS & NUTS" SHALL MEET THE REQUIREMENTS OF (ASTM A307), AND SHALL BE OF SUFFICIENT LENGTH TO EXTEND THROUGH THE FULL THICKNESS OF THE NUT AND ⅝" WASHER (FWC16a) AND NOT MORE THAN 1" BEYOND IT. TRIM REMAINING BOLT LENGTH TO MEET REQUIRED LENGTH.
4. FITTINGS (BOLTS, NUTS, AND WASHERS) SHALL BE GALVANIZED IN ACCORDANCE WITH ITEM 445,"GALVANIZING." FITTINGS SHALL BE SUBSIDIARY TO THE BID ITEM.
5. CROWN SHALL BE WIDENED TO ACCOMMODATE THE METAL BEAM GUARD FENCE.
6. THE LATERAL APPROACH TO THE GUARD FENCE, SHALL HAVE A MAXIMUM SLOPE OF 1V:10H.
7. IF SHOWN ELSEWHERE IN THE PLANS OR AS DIRECTED BY THE ENGINEER, THE GUARD FENCE MAY BE FLARED AT A RATE OF 25:1 OR FLATTER.
8. UNLESS OTHERWISE SHOWN IN THE PLANS, GUARD FENCE PLACED IN THE VICINITY OF CURBS SHALL BE POSITIONED SO THAT THE FACE OF CURB IS LOCATED DIRECTLY BELOW OR BEHIND THE FACE OF THE RAIL. RAIL PLACED OVER CURBS SHALL BE INSTALLED SO THAT THE POST BOLT IS LOCATED APPROXIMATELY 25 INCHES ABOVE THE GUTTER PAN OR EDGE OF SHOULDER.
9. APPLICATIONS IN SOLID ROCK ARE ONLY ALLOWED WITH STEEL POSTS. IF SOLID ROCK IS ENCOUNTERED WITHIN 0 TO 18" OF THE FINISHED GRADE, DRILL A 24" DIA. HOLE, 24" INTO THE ROCK. IF SOLID ROCK IS ENCOUNTERED BELOW 18", DRILL A 12" DIA. HOLE, 12" INTO THE ROCK OR TO THE STANDARD EMBEDMENT DEPTH, WHICHEVER MAYBE LESS. ANY EXCESS POST LENGTH, AFTER MEETING THESE DEPTHS, MAY BE FIELD CUT TO ENSURE PROPER GUARDRAIL MOUNTING HEIGHT. BACKFILL WITH COARSE AGGREGATE MATERIAL.
10. POSTS SHALL NOT BE SET IN CONCRETE, OF ANY DEPTH.
11. SPECIAL FABRICATION WILL BE REQUIRED AT INSTALLATION LOCATIONS HAVING A CURVATURE OF LESS THAN 150 FT. RADIUS.
12. UNLESS OTHERWISE SHOWN IN THE PLANS, A COMPOSITE MATERIAL BLOCK THAT MEETS THE REQUIREMENTS OF DMS-7210,"COMPOSITE MATERIAL POSTS AND BLOCKS FOR METAL BEAM GUARD FENCE" MAY BE SUBSTITUTED FOR BLOCKS OF SIMILAR DIMENSIONS. THE CONSTRUCTION DIVISION, TXDOT MAINTAINS A MATERIAL PRODUCER LIST (MPL) FOR PRODUCERS OF MATERIALS CONFORMING TO DMS-7210 ONLY PRODUCERS ON THE MPL MAY FURNISH COMPOSITE MATERIAL BLOCKS.
13.

NOTE: ** "WOOD" INDICATES DIMENSIONS FOR BOTH ROUND AND RECTANGULAR WOOD POST SYSTEMS.

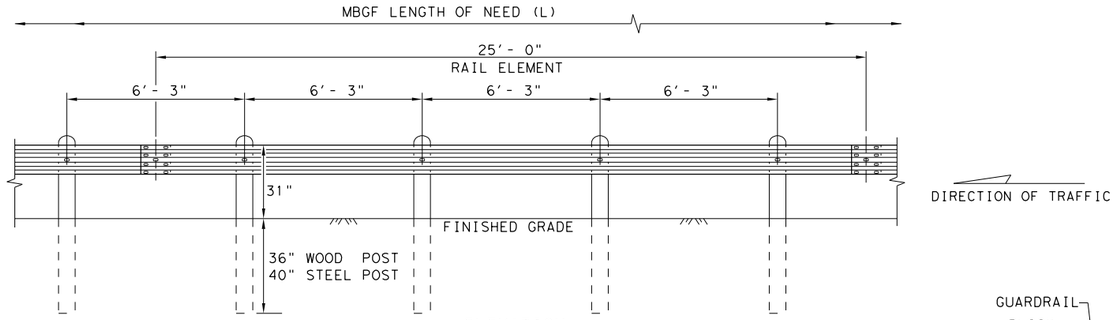

ELEVATION
MID-SPAN RAIL SPLICE

SHOWING A 25'- 0" SECTION OF W-BEAM RAIL. (SEE GENERAL NOTE 2)

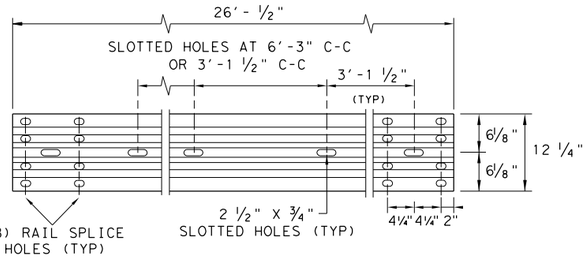

ELEVATION 25'- 0"(NOM.) W-BEAM SECTION

NOTES: SEE GENERAL NOTE 2 FOR ALLOWABLE RAIL TYPES.
SEE RAIL SPLICE DETAIL FOR REQUIRED HARDWARE.

NOTE:
FOUR TYPES OF BUTTON-HEAD GUARD RAIL BOLTS COME WITH A RECCESSED NUT.

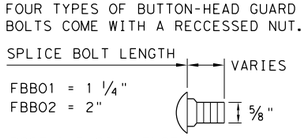

BUTTON HEAD BOLT

NOTE: SEE GENERAL NOTE 3 FOR SPLICE & POST BOLT DETAILS.

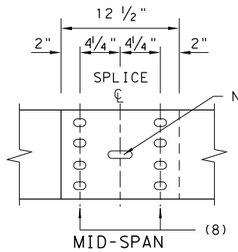

MID-SPAN
RAIL SPLICE DETAIL

NOTE: GF(31), MID-SPAN RAIL SPLICES ARE REQUIRED WITH 6'-3" POST SPACINGS.

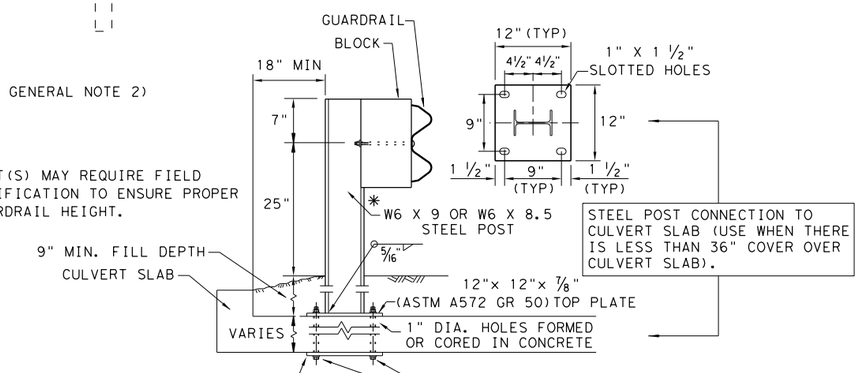

* POST(S) MAY REQUIRE FIELD MODIFICATION TO ENSURE PROPER GUARDRAIL HEIGHT.

LOW FILL CULVERT POST

NOTE: TRANSISTIONS TO BRIDGE RAILS OR TRAFFIC BARRIERS.
SEE GF(31)TL3 TR STANDARD FOR HIGH-SPEED TL-3 TRANSITIONS.
SEE GF(31)TL2 TR STANDARD FOR LOW-SPEED TL-2 TRANSITIONS.

NOTE: TWO INSTALLATION OPTIONS.

1. BOLT-THROUGH OPTION: REQUIRES A 6" MIN. SLAB THICKNESS. ⅞" DIA (ASTM A449) HEAVY HEX BOLTS WITH TWO HARDENED WASHER EACH AND HEAVY HEX NUTS.
   NOTE: BOLT LENGTH = SLAB PLUS 2 ¼" MIN.
2. EPOXY ANCHOR OPTION: THIS OPTION MAY ONLY BE USED IF THE CULVERT SLAB IS 9" MIN. THICK. THREADED ANCHOR RODS MUST BE ⅞" DIA. ASTM A449 OR A193 GRADE B7 WITH HEAVY HEX NUT, AND ONE HARDENED WASHER EACH. EMBED ANCHOR RODS 6" WITH HILTI HIT RE 500 EPOXY ADHESIVE. OTHER TYPE III CLASS C EPOXY ADHESIVES MEETING THE REQUIREMENTS OF DMS-6100, "EPOXIES AND ADHESIVES", MAY BE USED IF IT CAN BE DEMONSTRATED THAT THEY MEET OR EXCEED THE STRENGTH OF HILTI HIT RE 500 WITH THE SAME EMBEDMENT DEPTH AND THREADED ROD DIA. FOLLOW THE MANUFACTURER'S REQUIREMENTS FOR INSTALLING EPOXIED THREADED RODS. EXTEND RODS ¼" MIN. BEYOND NUT.

NOTE: CULVERTS OF 25 FT. OR LESS, SEE GF(31)LS STANDARD FOR "LONG SPAN" OPTION.

Texas Department of Transportation

Design Division Standard

METAL BEAM GUARD FENCE
TL-3 MASH COMPLIANT
GF(31)-19

FILE: gf3119.dgn	DN: TxDOT	CK: KM	DW: VP	CK: CGL/AG
©TxDOT: NOVEMBER 2019	CONT	SECT	JOB	HIGHWAY
REVISIONS				KLEIN RD
	DIST	COUNTY		SHEET NO.
	SAT	GUADALUPE		162

DISCLAIMER:
THE USE OF THIS STANDARD IS GOVERNED BY THE "TEXAS ENGINEERING PRACTICE ACT". NO WARRANTY OF ANY KIND IS MADE BY TXDOT FOR ANY PURPOSE WHATSOEVER. TXDOT ASSUMES NO RESPONSIBILITY FOR THE CONVERSION OF THIS STANDARD TO OTHER FORMATS OR FOR INCORRECT RESULTS OR DAMAGES RESULTING FROM ITS USE.

DATE: 1/9/2020 3:45:10 PM
FILE: H:\Projects\510\30\03\Design\Civil\Standards\Roadway\gf31trtl219.dgn

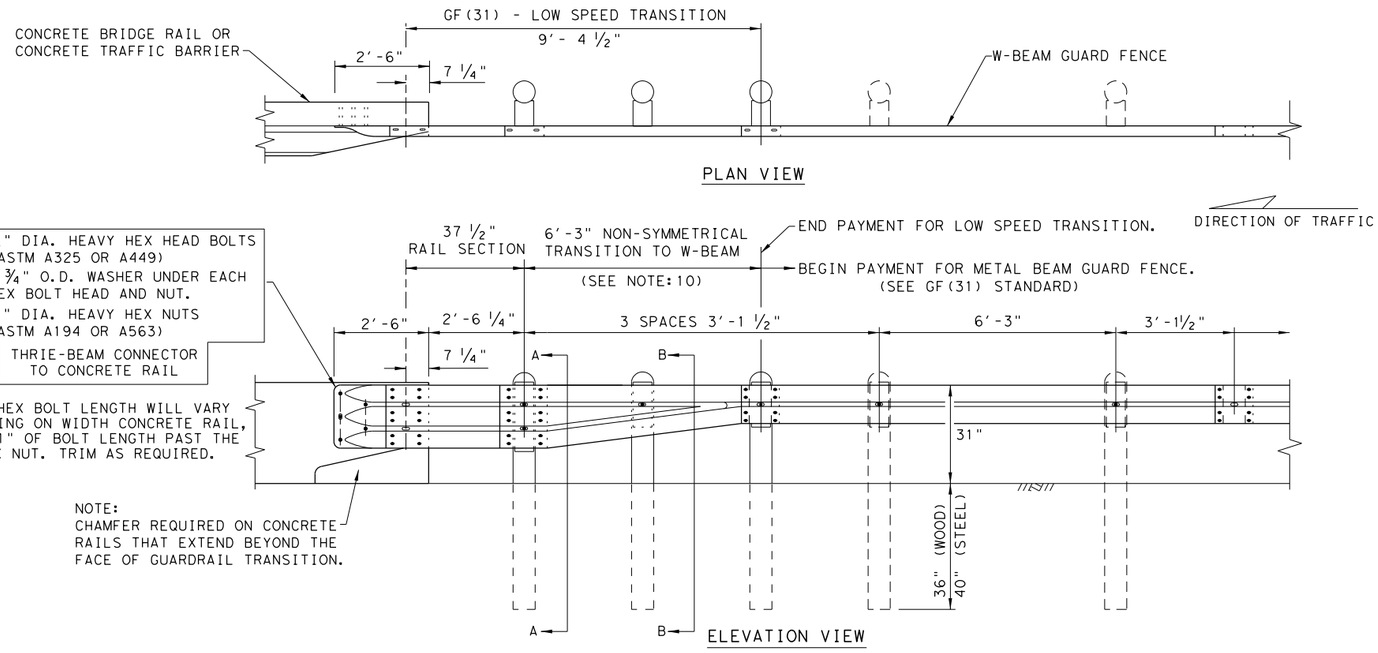

GENERAL NOTES

1. THE TYPE OF POST (ROUND WOOD POST, RECTANGULAR WOOD POST, OR STEEL POST) WILL BE AS SHOWN IN THE PLANS. THE EXACT POSITION OF TRANSITIONS SHALL BE AS SHOWN IN THE PLANS OR AS DIRECTED BY THE ENGINEER. REFER TO GF(31)STANDARD SHEET.
2. RAIL ELEMENT SHALL MEET THE REQUIREMENTS OF ITEM 540, "METAL BEAM GUARD FENCE" EXCEPT AS MODIFIED IN THE PLANS.
3. FITTINGS (BOLTS, NUTS, AND WASHERS) SHALL BE GALVANIZED IN ACCORDANCE WITH ITEM 445, "GALVANIZING." FITTINGS SHALL BE SUBSIDIARY TO THE BID ITEM REQUIRING CONSTRUCTION OF THE TRANSITION.
4. BUTTON HEAD "POST BOLTS & NUTS" SHALL MEET THE REQUIREMENTS OF (ASTM A307), AND SHALL BE OF SUFFICIENT LENGTH TO EXTEND THROUGH THE FULL THICKNESS OF THE NUT AND 5/8" WASHER (FWC16a)AND NOT MORE THAN 1" BEYOND IT. TRIM BOLT LENGTH TO MEET REQUIRED LENGTH.
5. POSTS SHALL NOT BE SET IN CONCRETE, OF ANY DEPTH.
6. CROWN SHALL BE WIDENED TO ACCOMMODATE TRANSITIONS.
7. WHERE SOLID ROCK IS ENCOUNTERED, CONTACT THE DESIGN DIVISION FOR ADDITIONAL GUIDANCE. (512) 416-2678
8. UNLESS OTHERWISE SHOWN IN THE PLANS, A COMPOSITE MATERIAL BLOCK THAT MEETS THE REQUIREMENTS OF DMS-7210, "COMPOSITE MATERIAL POSTS AND BLOCKS FOR METAL BEAM GUARD FENCE" MAY BE SUBSTITUTED FOR BLOCKS OF SIMILAR DIMENSIONS. THE CONSTRUCTION DIVISION, TXDOT, MAINTAINS A MATERIAL PRODUCER LIST (MPL) FOR PRODUCERS OF MATERIALS CONFORMING TO DMS-7210. ONLY PRODUCERS ON THE MPL CAN FURNISH COMPOSITE MATERIAL BLOCKS.
9. REFER TO GF(31)STANDARD SHEET & BRIDGE RAILING DETAILS FOR ADDITIONAL DETAILS.
10. FOR ROUND WOOD POSTS SYSTEMS, ALL ROUND WOOD POSTS SHALL BE 7 1/2" DIA. MINIMUM THROUGHOUT THE TRANSITION.

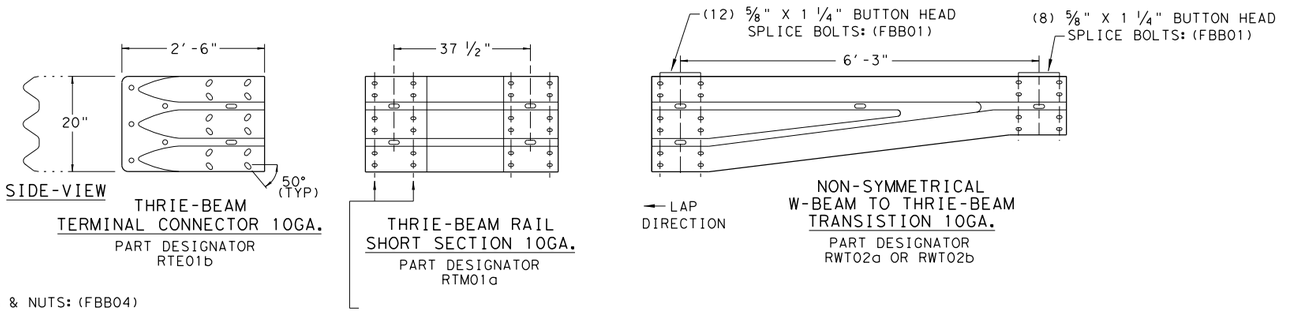

PLATE WASHER INSTRUCTIONS

BRIDGE APPROACH - UPSTREAM: THE SHORT RAIL LAPS OVER THE TERMINAL CONNECTOR. PLATE WASHERS ARE INSTALLED UNDER THE SPLICE NUTS AGAINST INSIDE OF CONNECTOR.
BRIDGE EXIT - DOWNSTREAM: THE TERMINAL CONNECTOR LAPS OVER THE NESTED RAIL. PLATE WASHERS ARE INSTALLED UNDER THE BOLT HEAD AGAINST OUTSIDE OF CONNECTOR.

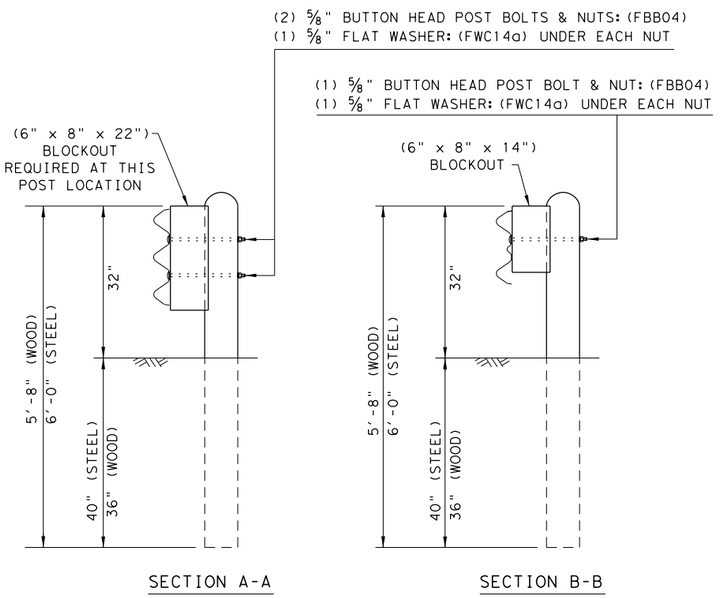

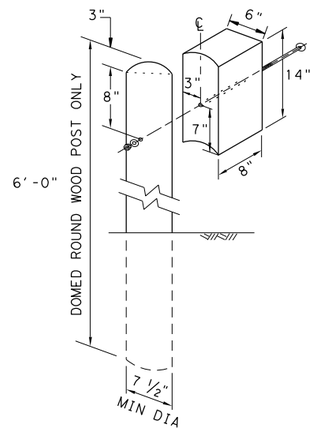

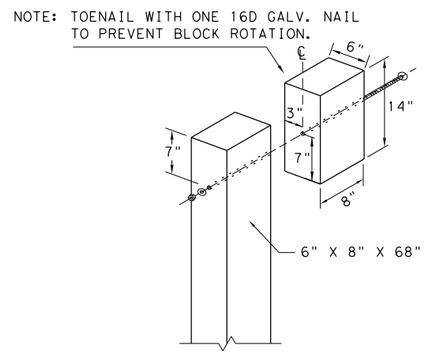

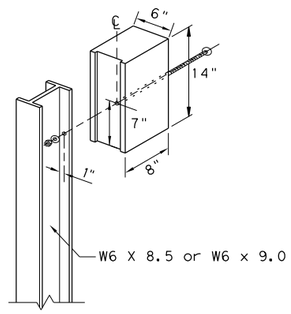

NOTE: * "WOOD" INDICATES DIMENSIONS FOR BOTH ROUND AND RECTANGULAR WOOD POST SYSTEMS.

LOW-SPEED TRANSITION

Texas Department of Transportation | Design Division Standard

METAL BEAM GUARD FENCE THRIE-BEAM TRANSITION TL-2 MASH COMPLIANT

GF(31)TR TL2-19

FILE: gf31trtl219.dgn	DN: TxDOT	CK: KM	DW: VP	CK: CGL/AG
©TxDOT: NOVEMBER 2019	CONT	SECT	JOB	HIGHWAY
REVISIONS				KLEIN RD
	DIST	COUNTY		SHEET NO.
	SAT	GUADALUPE		163

DISCLAIMER:
THE USE OF THIS STANDARD IS GOVERNED BY THE "TEXAS ENGINEERING PRACTICE ACT". NO WARRANTY OF ANY KIND IS MADE BY TXDOT FOR ANY PURPOSE WHATSOEVER. TXDOT ASSUMES NO RESPONSIBILITY FOR THE CONVERSION OF THIS STANDARD TO OTHER FORMATS OR FOR INCORRECT RESULTS OR DAMAGES RESULTING FROM ITS USE.

DATE: 1/9/2020
FILE: H:\Projects\510\30\03\Design\Civil\Standards\Roadway\gf31ms19.dgn

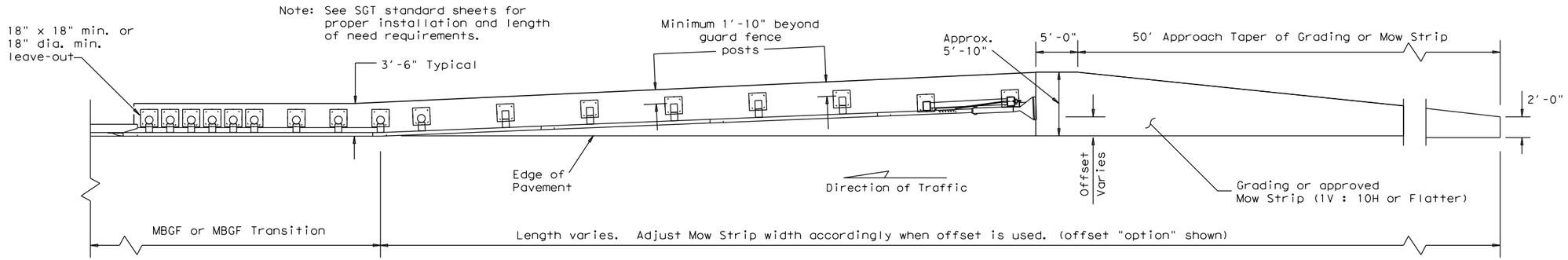

GRADING AND MOW STRIP AT GUARDRAIL END TREATMENTS

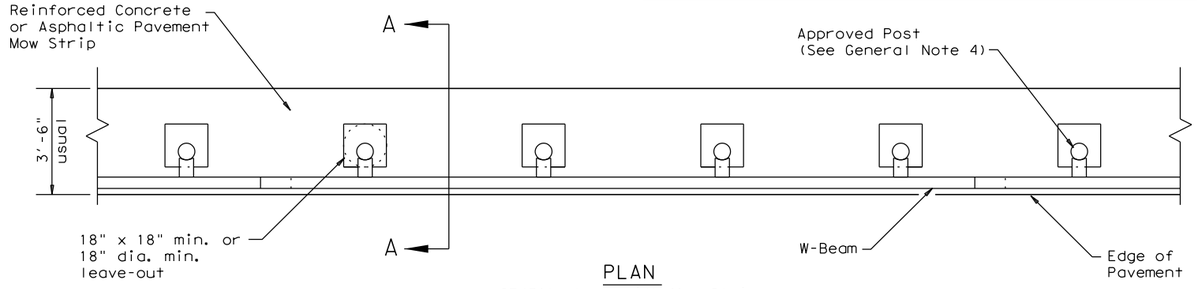

PLAN

GF(31) shown with Mow Strip
(See GF(31) standard sheet for proper installation)

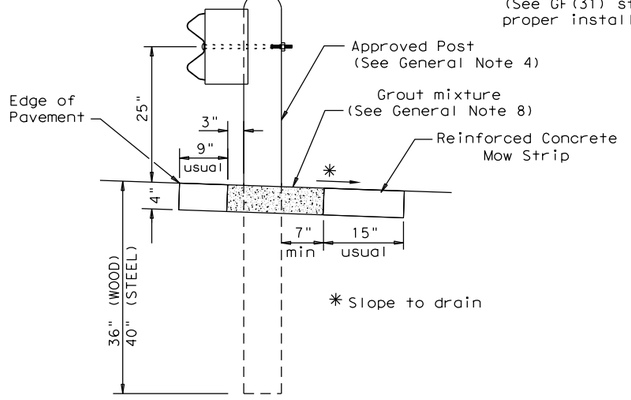

SECTION A-A

Typical

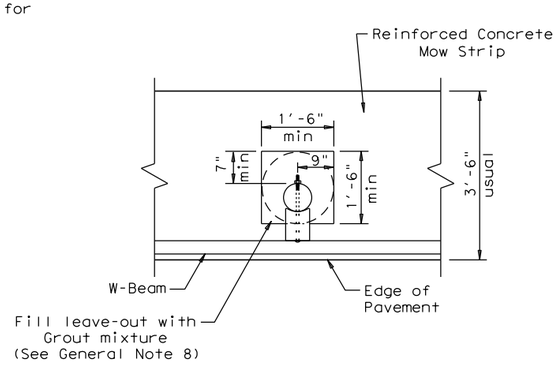

MOW STRIP DETAIL

Reinforced Concrete Mow Strip with 18" x 18" Square or 18" Dia. minimum leave-out.

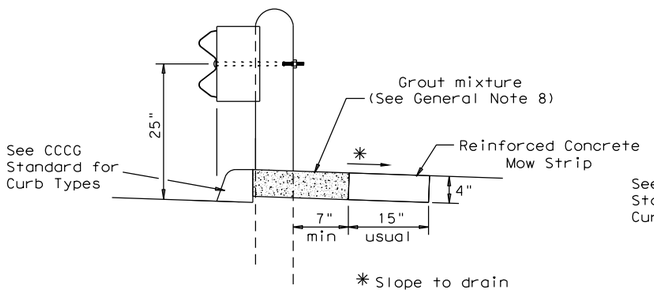

CURB OPTION (1)

This option will increase the post embedment throughout the system.

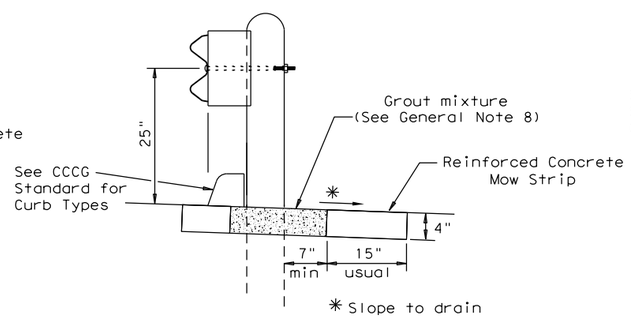

CURB OPTION (2)

Curb shown on top of mow strip

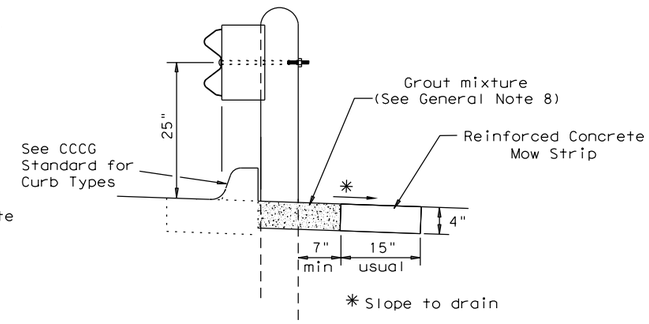

CURB OPTION (3)

Note: Site Condition(s)

Site conditions may exist where grading is required for the proper installation of metal guard fence and end treatments.

Approach grading or mow strip may be decreased or eliminated, as directed by the Engineer.

GENERAL NOTES

1. This mow strip design is for use with metal beam guard fence, guard fence transitions, and guard fence end treatments. See applicable GF(31) MBGF or GF(31) Transition Standard sheet for additional information.
2. Mow strips shall be reinforced concrete with (wire mesh or synthetic fiber), as shown on the plans and will be paid for under the pertinent bid item. Reinforced concrete shall be placed in accordance with Item 432, "Riprap." The use of the synthetic fiber in lieu of steel reinforcing is acceptable, provided the fiber producer is on the Department Material Producer List (MPL), maintained by TxDOT, Construction Division.
3. The leave-out behind the post shall be a minimum of 7".
4. Only steel (W6 x 8.5 or W6 x 9.0), or 7 ½" Dia. round wood posts are acceptable for use in the mow strip. See GF(31) Standard for additional details.
5. Other curb placement options may be used. Curbs are not considered part of the mow strip and will be paid for under other pertinent bid item.
6. Thickness of the mow strip will be 4".
7. The limits of payment for reinforced concrete will include leave-outs for the posts.
8. The leave-outs shall be filled with a Grout mixture consisting of: 2719 pounds sand, 188 pounds Type 1 or II cement, and 550 pounds of water per cubic yard, with a 28-day compressive strength of approximately 230 psi or less. Provide grout with a consistency that will flow into and completely fill all voids. Due to auger size, larger leave-out dimensions are acceptable from both an impact performance and maintenance repair standpoint (Suggested Maximum leave-out of 20"). Payment for furnishing and placing the grout mixture will be subsidiary to the pay item of riprap mow strip.

Texas Department of Transportation

Design Division Standard

METAL BEAM GUARD FENCE (MOW STRIP) TL-3 MASH COMPLIANT

GF(31)MS-19

FILE: gf31ms19.dgn	DN: TxDOT	CK: KM	DW: VP	CK: CGL/AG
©TxDOT: NOVEMBER 2019	CONT	SECT	JOB	HIGHWAY
REVISIONS				KLEIN RD
	DIST	COUNTY		SHEET NO.
	SAT	GUADALUPE		164

DISCLAIMER:
The use of this standard is governed by the "Texas Engineering Practice Act". No warranty of any kind is made by TxDOT for any purpose whatsoever. TxDOT assumes no responsibility for the conversion of this standard to other formats or for incorrect results or damages resulting from its use.

DATE: 1/9/2020 3:45:14 PM
FILE: H:\Projects\5101\30\03\Design\Civil\Standards\Roadway\bed14.dgn

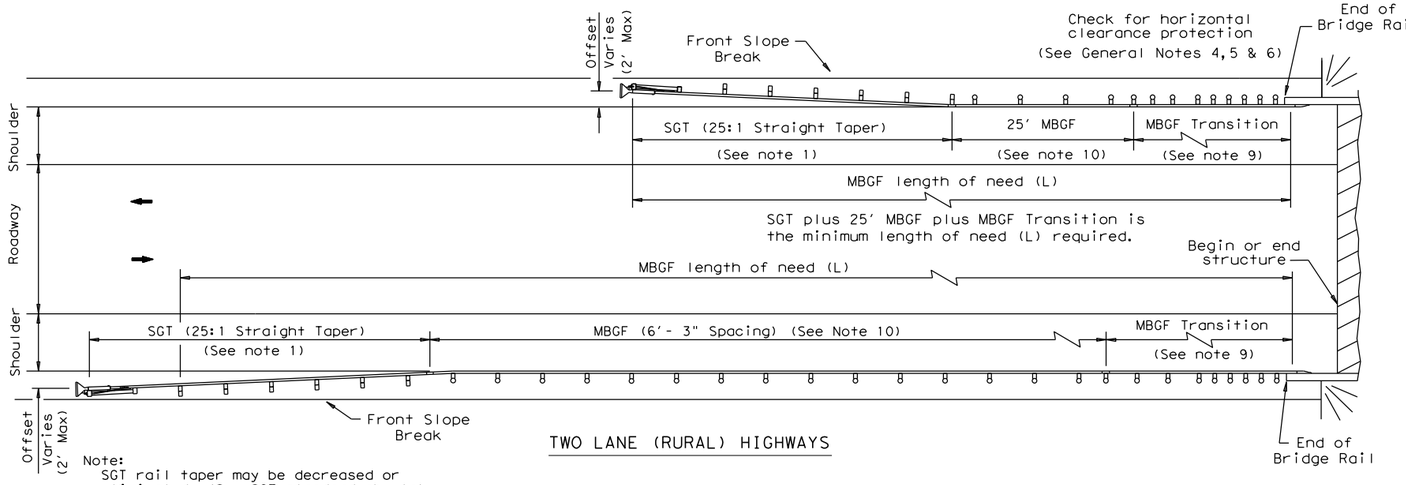

TWO LANE (RURAL) HIGHWAYS

Note:
SGT rail taper may be decreased or eliminated. (See SGT standard sheets)

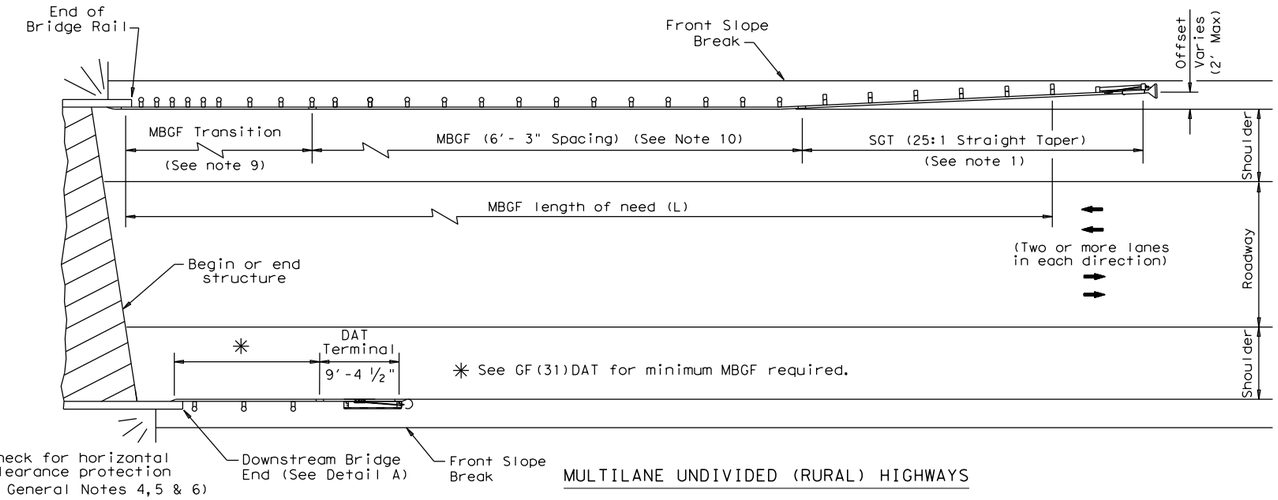

MULTILANE UNDIVIDED (RURAL) HIGHWAYS

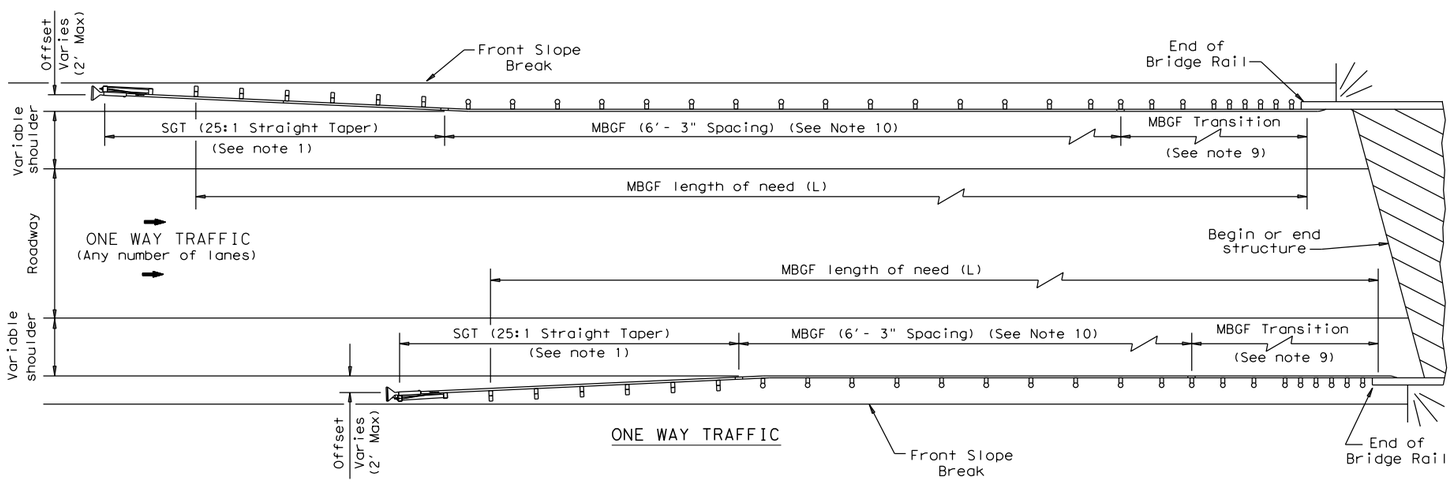

ONE WAY TRAFFIC

GENERAL NOTES

1. For more detail: See GF(31), SGT( )31, GF(31)TR, and GF(31)TL2 standard sheets.
2. Quantities of metal beam guard fence (MBGF) at individual bridge ends are as shown in the plans.
3. Use average daily traffic (ADT) for the current year to determine MBGF length of need in accordance with the Roadway Design Manual unless otherwise specified. Where significant traffic volume growth is anticipated on low volume (0-750 ADT) highways, use length determinations for the higher volume category.
4. MBGF may not be required to shield departure end of bridge unless other obstacles within the horizontal clearance limits or opposing traffic indicate a MBGF consideration.
5. Downstream anchor terminals (DAT) are only for downstream end anchorage use, outside the horizontal clearance area of opposing traffic.
6. Direct connection of MBGF to concrete rails are only for downstream rail connections outside the horizontal clearance area of opposing traffic. (This requires a minimum of three standard line posts plus the DAT terminal, See Detail A)
7. The crown shall be widened to accommodate MBGF. Typically the "front slope" break should be 2'- 0" from the back of the MBGF post. This applies to new construction on new alignment or where existing roadway cross section is to be widened to increase roadway width. This does not apply to rehabilitation work where existing roadway crown width is to be retained (See Typical Cross Section at MBGF).
8. For restrictive bridge widths: The MBGF should be properly transitioned from the existing bridge rail to the adjoining MBGF (See MBGF Transition Standards). Metal beam guard fence at these bridge location(s) shall be flared at the rate of 25:1 or flatter, and be of the length necessary to locate the terminal end at the 2 ft. "maximum" offset from the shoulder edge in the approach direction.
9. Transition length and post spacing will vary depending on the transition type. Transition type will be shown elsewhere in the plans.
10. A minimum 25' length of MBGF will be required.

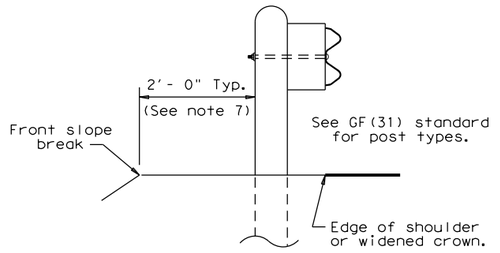

TYPICAL CROSS SECTION AT MBGF

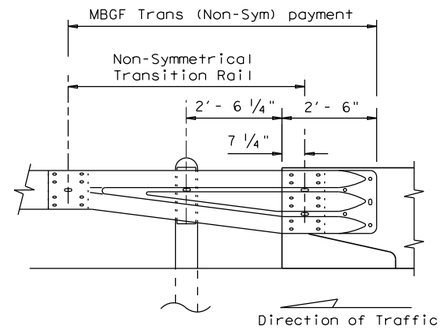

Note:
All rail elements shall be lapped in the direction of adjacent traffic.

DETAIL A
Showing Downstream Rail Attachment

Texas Department of Transportation

Design Division Standard

BRIDGE END DETAILS

(METAL BEAM GUARD FENCE APPLICATIONS TO RIGID RAILS)

BED-14

FILE: bed14.dgn	DN: TxDOT	CK: AM	DW: BD/VP	CK: CGL
© TxDOT: December 2011	CONT	SECT	JOB	HIGHWAY
REVISIONS REVISED APRIL 2014 SEE (MEMO 0414)				KLEIN RD
	DIST	COUNTY		SHEET NO.
	SAT	GUADALUPE		165

DISCLAIMER:
THE USE OF THIS STANDARD IS GOVERNED BY THE "TEXAS ENGINEERING PRACTICE ACT". NO WARRANTY OF ANY KIND IS MADE BY TXDOT FOR ANY PURPOSE WHATSOEVER. TXDOT ASSUMES NO RESPONSIBILITY FOR THE CONVERSIONOF THIS STANDARD TO OTHER FORMATS OR FOR INCORRECT RESULTS OR DAMAGES RESULTING FROM ITS USE.

DATE: 1/9/2020
FILE: H:\Projects\510\30\03\Design\Civil\Standards\Roadway\sgt12s3118.dgn

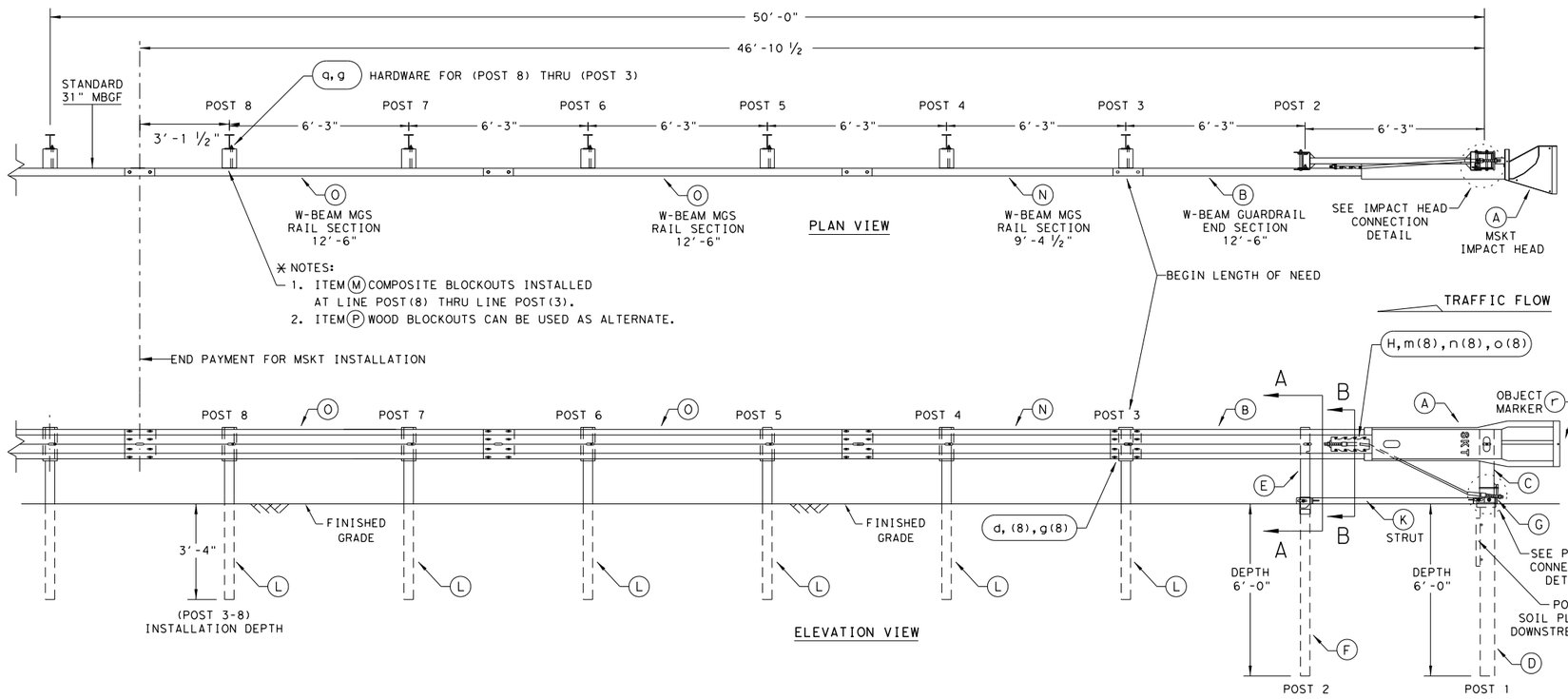

NOTE: SEE (GENERAL NOTE 14) FOR DRIVING CAP INFORMATION.

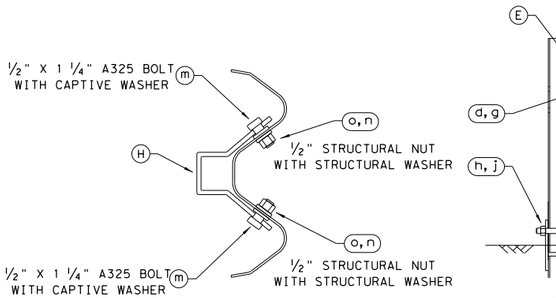

SECTION B-B
ANCHOR BRACKET

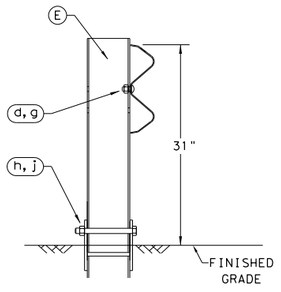

POST 2
SECTION A-A

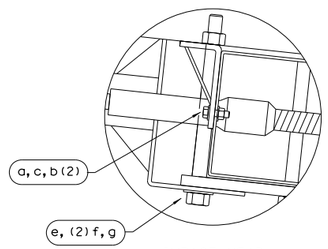

IMPACT HEAD
CONNECTION DETAIL

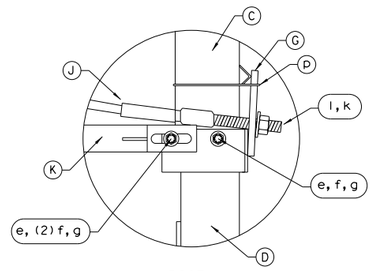

POST 1
CONNECTION DETAIL

GENERAL NOTES

1. FOR SPECIFIC INFORMATION REGARDING INSTALLATION AND TECHNICAL GUIDANCE OF THE SYSTEM, CONTACT: ROAD SYSTEMS, INC. (432)263-2435. 3616 OLD HOWARD COUNTY AIRPORT, BIG SPRING, TX 79720
2. FOR INSTALLATION, REPAIR AND MAINTENANCE REFER TO THE; MSKT END TERMINAL, PRODUCT DESCRIPTION ASSEMBLY MANUAL (PUBLICATION~062717).
3. APPLY HIGH INTENSITY REFLECTIVE SHEETING, "OBJECT MARKER" ON THE FRONT FACE OF THE DEVICE PER MANUFACTURER'S RECOMMENDATIONS. OBJECT MARKER SHALL CONFORM TO THE STANDARDS REQUIRED IN TEXAS MUTCD.
4. FOR POST (LEAVE-OUT) INSTALLATION AND GUIDANCE SEE TXDOT'S LATEST ROADWAY MOW STRIP STANDARD.
5. HARDWARE (BOLTS, NUTS, & WASHERS) SHALL BE GALVANIZED IN ACCORDANCE WITH ITEM 445, "GALVANIZING". FITTINGS SHALL BE SUBSIDIARY TO THE BID ITEM.
6. SYSTEM SHOWN USING STEEL WIDE FLANGE POSTS WITH COMPOSITE BLOCKOUTS.
7. A COMPOSITE MATERIAL BLOCKOUTS THAT MEETS THE REQUIREMENTS OF DMS-7210, MAY BE SUBSTITUTED FOR BLOCKOUTS OF SIMILAR DIMENSIONS. SEE CONSTRUCTION DIVISION MATERIAL PRODUCER LIST (MPL) FOR CERTIFIED PRODUCERS.
8. IF SOLID ROCK IS ENCOUNTERED IN THE AREA OF (POST 1) AND / OR (POST 2) CONTACT THE MANUFACTURER, & REFER TO THE LATEST ROADWAY MBGF STANDARD FOR INSTALLATION GUIDANCE.
9. POSTS SHALL NOT BE SET IN CONCRETE.
10. SYSTEM MUST BE ATTACHED TO STANDARD 31" MBGF.
11. UNDER NO CIRCUMSTANCES SHALL THE GUARDRAIL WITHIN THE MSKT SYSTEM BE CURVED.
12. A FLARE RATE OF UP TO 25:1 MAY BE USED TO PREVENT THE TERMINAL HEAD FROM ENCROACHING ON THE SHOULDER. THE FLARE MAY BE DECREASED OR ELIMINATED FOR SPECIFIC INSTALLATIONS, IF DIRECTED BY THE ENGINEER.
13. THE SYSTEM IS SHOWN WITH TWO 12'-6" MBGF PANELS, ONE 25'-0" MBGF PANEL IS ALSO ALLOWED IN THEIR PLACE.
14. A DRIVING CAP WITH A TIMBER OR PLASTIC INSERT SHALL BE USED WHEN DRIVING POSTS 3-8 TO PREVENT DAMAGE TO THE GALVANIZING ON TOP OF THE POST. SPECIAL DRIVING CAP TO BE USED ON LOWER POSTS 1 & 2 TO PREVENT DAMAGE TO THE WELDED PLATES.

ITEM	QTY	MAIN SYSTEM COMPONENTS	ITEM NUMBERS
A	1	MSKT IMPACT HEAD	MS3000
B	1	W-BEAM GUARDRAIL END SECTION, 12 Ga.	SF1303
C	1	POST 1 - TOP (6" X 6" X 1/8" TUBE)	MTPHP1A
D	1	POST 1 - BOTTOM (6' W6X15)	MTPHP1B
E	1	POST 2 - ASSEMBLY TOP	UHP2A
F	1	POST 2 - ASSEMBLY BOTTOM (6' W6X9)	HP2B
G	1	BEARING PLATE	E750
H	1	CABLE ANCHOR BOX	S760
J	1	BCT CABLE ANCHOR ASSEMBLY	E770
K	1	GROUND STRUT	MS785
L	6	W6x9 OR W6x8.5 STEEL POST	P621
M	6	COMPOSITE BLOCKOUTS	CBSP-14
N	1	W-BEAM MGS RAIL SECTION (9'-4 1/2")	G12025
O	2	W-BEAM MGS RAIL SECTION (12'-6")	G1203A
P	6	WOOD BLOCKOUT 6" X 8" X 14"	P675
Q	1	W-BEAM MGS RAIL SECTION (25'-0")	G1209
		SMALL HARDWARE	
a	2	5/8" x 1" HEX BOLT (GRD 5)	B5160104A
b	4	5/8" WASHER	W0516
c	2	5/8" HEX NUT	N0516
d	25	5/8" Dia. x 1 1/4" SPLICE BOLT (POST 2)	B580122
e	2	5/8" Dia. x 9" HEX BOLT (GRD A449)	B580904A
f	3	5/8" WASHER	W050
g	33	5/8" Dia. H.G.R NUT	N050
h	1	3/4" Dia. x 8 1/2" HEX BOLT (GRD A449)	B340854A
j	1	3/4" Dia. HEX NUT	N030
k	2	1 ANCHOR CABLE HEX NUT	N100
l	2	1 ANCHOR CABLE WASHER	W100
m	8	1/2" x 1 1/4" A325 BOLT WITH CAPTIVE WASHER	SB12A
n	8	1/2" STRUCTURAL NUTS	N012A
o	8	1 1/16" O.D. x 3/16" I.D. STRUCTURAL WASHERS	W012A
p	1	BEARING PLATE RETAINER TIE	CT-100ST
q	6	5/8" x 10" H.G.R. BOLT	B581002
r	1	OBJECT MARKER 18" X 18"	E3151

SEE NOTES: ✳

ALTERNATIVE ITEMS NOT SHOWN. ✳✳
✳ ITEM(P) 8" WOOD-BLOCKOUT
✳✳ ITEM(Q) 25'GUARD FENCE PANEL

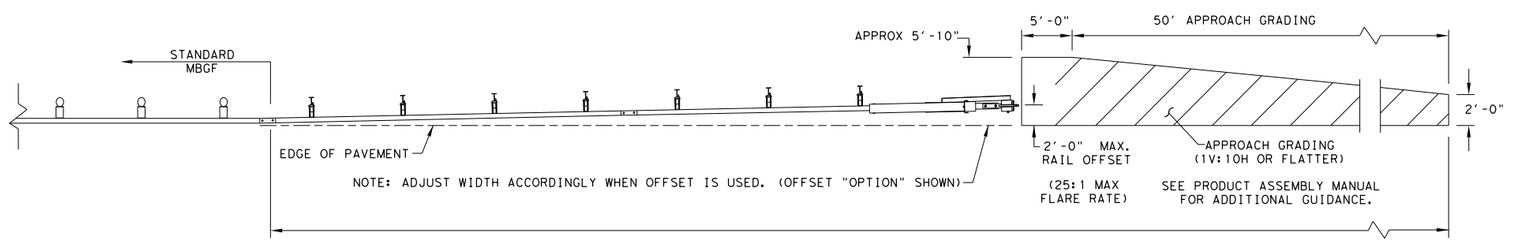

APPROACH GRADING AT GUARDRAIL END TREATMENTS

TRAFFIC FLOW

NOTE: TXDOT GENERIC APPROACH GRADING LAYOUT USED FOR ALL TANGENT TYPE END TREATMENTS.

NOTE: THIS STANDARD IS A BASIC REPRESENTATION OF THE MSKT END TERMINAL, IT IS NOT INTENDED TO REPLACE THE PRODUCT DESCRIPTION ASSEMBLY MANUAL.

Texas Department of Transportation

Design Division Standard

SINGLE GUARDRAIL TERMINAL

MSKT-MASH-TL-3

SGT(12S)31-18

FILE: sgt12s3118.dgn	DN:TxDOT	CK:KM	DW:VP		CK:CL
© TxDOT: APRIL 2018	CONT	SECT	JOB		HIGHWAY
REVISIONS					KLEIN RD
	DIST	COUNTY			SHEET NO.
	SAT	GUADALUPE			166

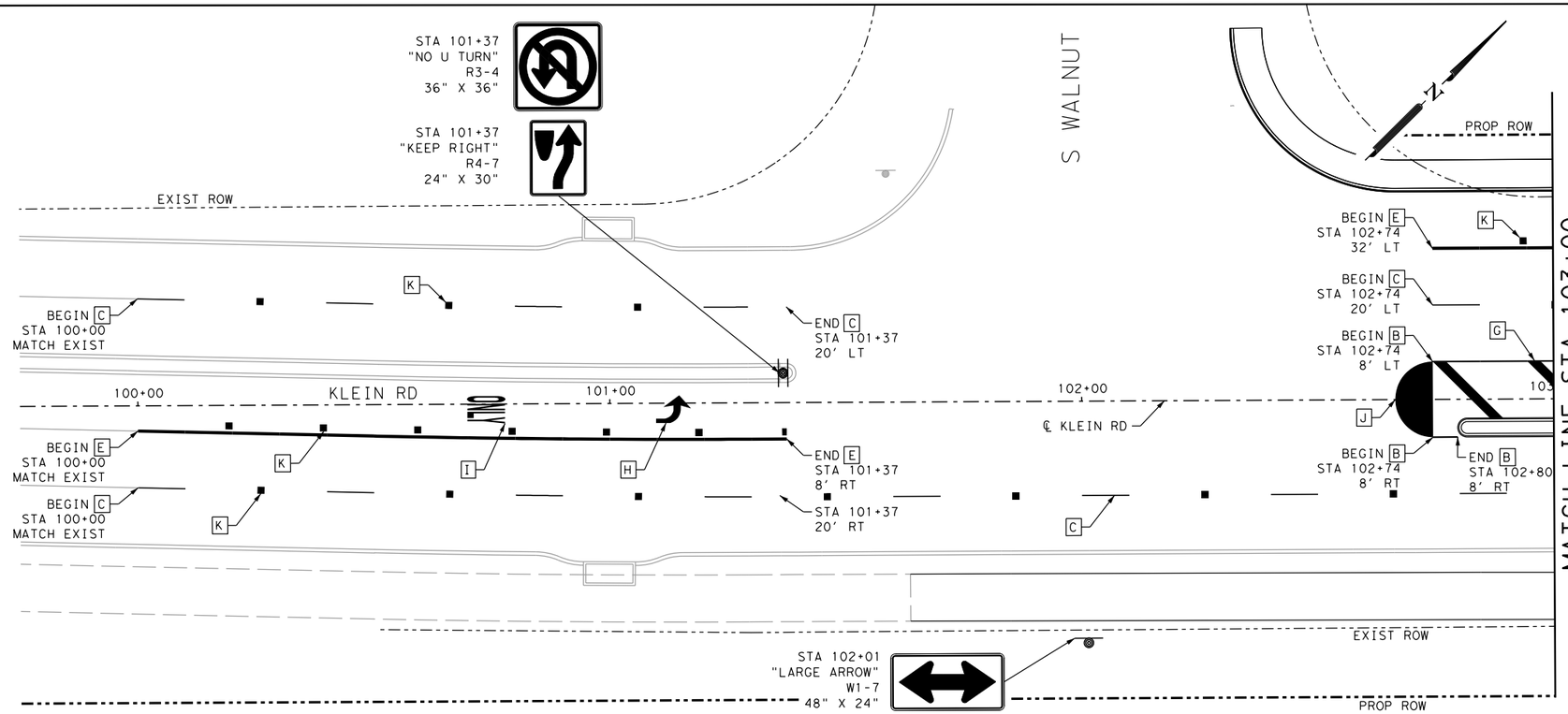

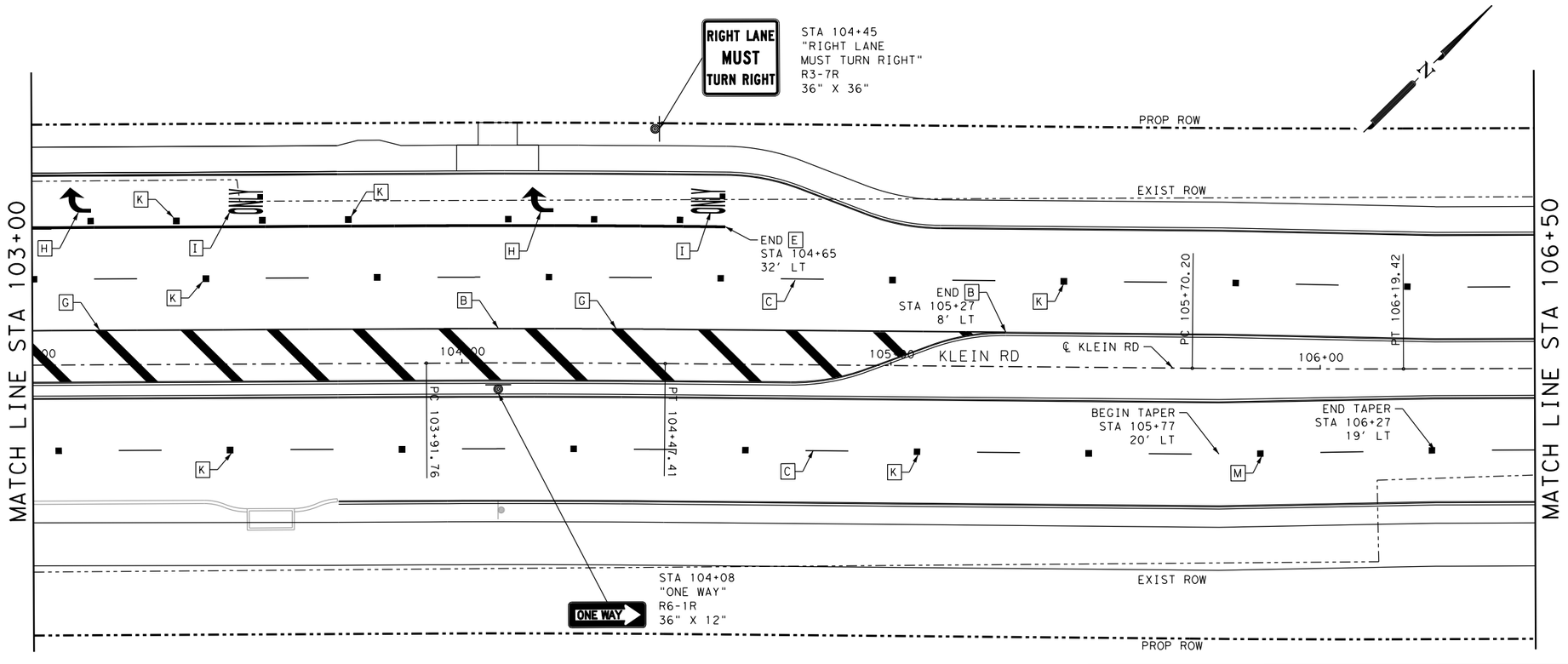

ITEM	DESCRIPTION	UNIT	QTY
0644-6001	IN SM RD SN SUP&AM TY10BWG(1)SA(P)	EA	1
0644-6004	IN SM RD SN SUP&AM TY10BWG(1)SA(T)	EA	1
0644-6061	IN SM RD SN SUP&AM TYTWT(1)WS(T)	EA	2
0666-6036	REFL PAV MRK TY I (W)8"(SLD)(100MIL)	LF	325
0666-6054	REFL PAV MRK TY I (W)(ARROW)(100MIL)	EA	3
0666-6078	REFL PAV MRK TY I (W)(WORD)(100MIL)	EA	3
0666-6090	REF PAV MRK TY I (W)(MED NOSE)(100MIL)	EA	1
0666-6147	REFL PAV MRK TY I (Y)24"(SLD)(100MIL)	LF	198
0666-6224	PAVEMENT SEALER 4"	LF	548
0666-6226	PAVEMENT SEALER 8"	LF	325
0666-6230	PAVEMENT SEALER 24"	LF	198
0666-6231	PAVEMENT SEALER (ARROW)	EA	3
0666-6232	PAVEMENT SEALER (WORD)	EA	3
0666-6233	PAVEMENT SEALER (MED NOSE)	EA	1
0666-6300	RE PM W/RET REQ TY I (W)4"(BRK)(100MIL)	LF	290
0666-6315	RE PM W/RET REQ TY I (Y)4"(SLD)(100MIL)	LF	258
0672-5009	REFL PAV MRKR TY II-B-B	EA	1
0672-6007	REFL PAV MRKR TY I-C	EA	45

LEGEND

A	4" SLD (W) STRIPE	G	24" SLD (Y) STRIPE
B	4" SLD (Y) STRIPE	H	WHITE ARROW
C	4" BRK (W) STRIPE	I	WHITE WORD
D	4" BRK (Y) STRIPE	J	MEDIAN NOSE (Y)
E	8" SLD (W) STRIPE	K	REFL PAV MRKR TY I-C
F	24" SLD (W) STRIPE	L	REFL PAV MRKR TY II-A-A
	TRAFFIC SIGN	M	REFL PAV MRKR TY II-B-B

NOTES

1. FOR ADDITIONAL DETAILS SEE TxDOT TYPICAL STANDARD SHEETS.
2. EXISTING FEATURES ARE SHOWN SCREENED BACK.
3. ALL REFLECTIVE PAVEMENT MARKINGS SHALL RECEIVE A TY I AND TY II APPLICATION.
4. ALL DIMENSIONS ARE TO FACE OF CURB AND/OR CENTER OF PAVEMENT MARKINGS, UNLESS OTHERWISE INDICATED.

DESIGN

INTERIM REVIEW

DOCUMENT INCOMPLETE. NOT INTENDED FOR PERMIT, BIDDING OR CONSTRUCTION.
ENGINEER: TYLER PAYNE DUBE
P.E. SERIAL NO: 118612
DATE: 1/9/2020

APPROVAL

INTERIM REVIEW

DOCUMENT INCOMPLETE. NOT INTENDED FOR PERMIT, BIDDING OR CONSTRUCTION.
ENGINEER: JOHN A. TYLER
P.E. SERIAL NO: 105193
DATE: 1/9/2020

0 10 20 30 60

SCALE: PLAN 1"= 30'

REV. NO.	DATE	DESCRIPTION	BY

PAPE-DAWSON ENGINEERS
SAN ANTONIO | AUSTIN | HOUSTON | FORT WORTH | DALLAS
2000 NW LOOP 410 | SAN ANTONIO, TX 78213 | 210.375.9000
TBPE FIRM REGISTRATION #470 | TBPLS FIRM REGISTRATION #10028800

City of New Braunfels

KLEIN RD PHASE 2

SIGNING AND PAVEMENT MARKING LAYOUT

BEGIN PROJECT TO STA 106+50

SHEET 1 OF 9

DGN:	STATE	PROJECT NO.	ROADWAY
CHK DGN:	TEXAS	NB 18-026	KLEIN RD
DWG:	COUNTY	CITY	SHEET NO.
CHK DWG:	GUADALUPE	NEW BRAUNFELS	167

Plotted on: 1/9/2020

Design Filename: H:\Projects\510\30\03\Design\Civil\Traffic\5103003pm01.dgn

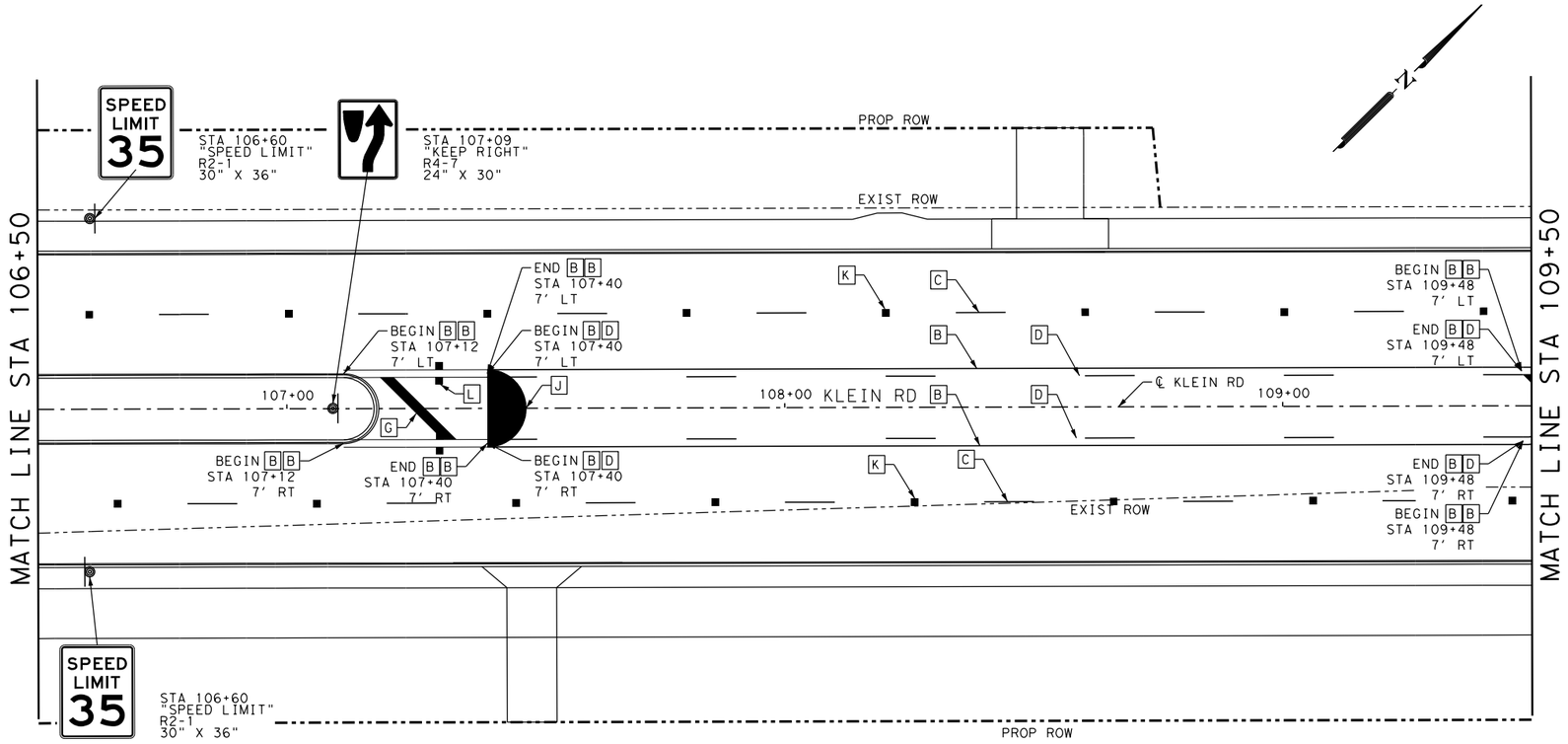

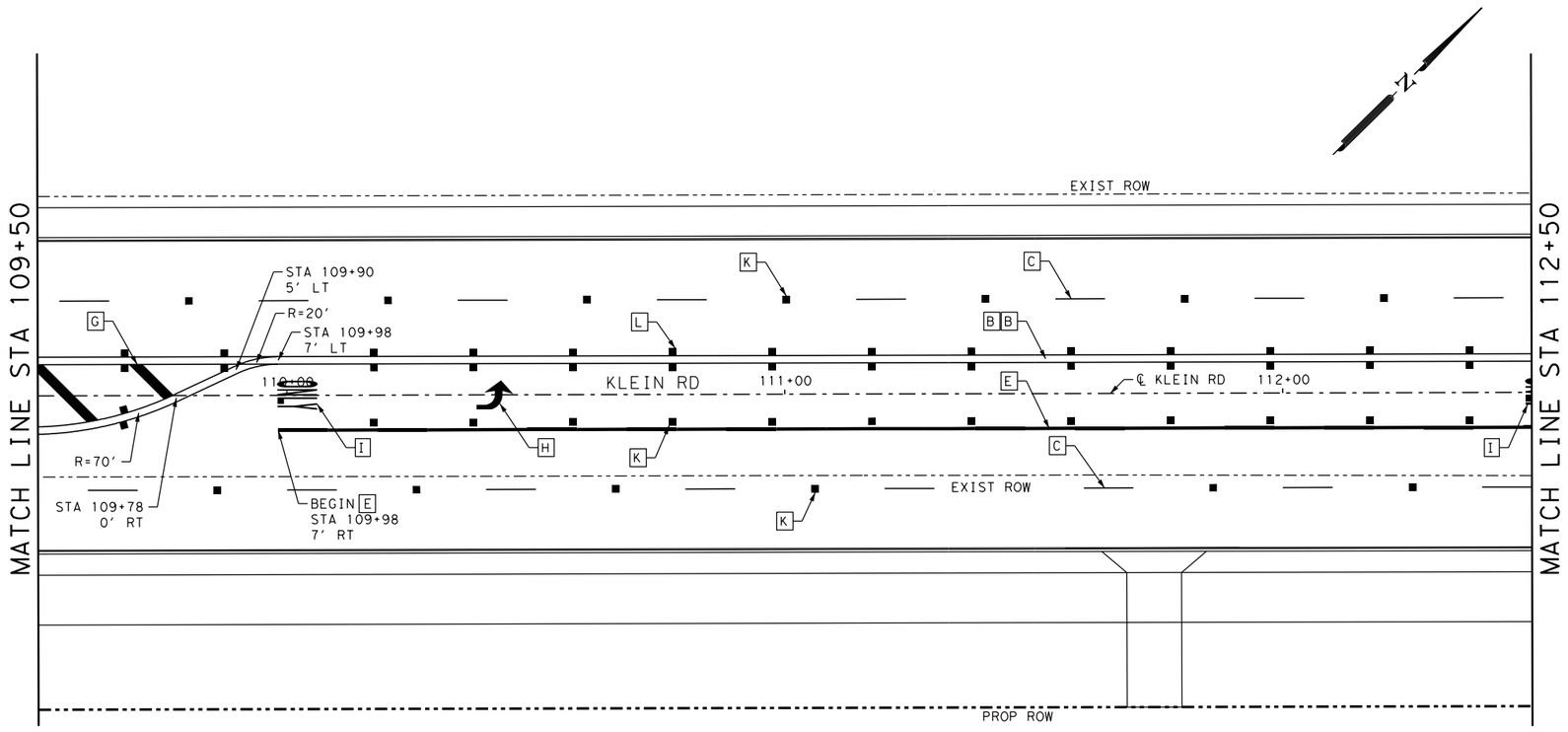

ITEM	DESCRIPTION	UNIT	QTY
0644-6060	IN SM RD SN SUP&AM TYTWT(1)WS(P)	EA	3
0666-6036	REFL PAV MRK TY I (W)8"(SLD)(100MIL)	LF	252
0666-6054	REFL PAV MRK TY I (W)(ARROW)(100MIL)	EA	1
0666-6078	REFL PAV MRK TY I (W)(WORD)(100MIL)	EA	1
0666-6090	REF PAV MRK TY I (W)(MED NOSE)(100MIL)	EA	1
0666-6147	REFL PAV MRK TY I (Y)24"(SLD)(100MIL)	LF	44
0666-6224	PAVEMENT SEALER 4"	LF	1650
0666-6226	PAVEMENT SEALER 8"	LF	252
0666-6230	PAVEMENT SEALER 24"	LF	44
0666-6231	PAVEMENT SEALER (ARROW)	EA	1
0666-6232	PAVEMENT SEALER (WORD)	EA	1
0666-6233	PAVEMENT SEALER (MED NOSE)	EA	1
0666-6300	RE PM W/RET REQ TY I (W)4"(BRK)(100MIL)	LF	300
0666-6312	RE PM W/RET REQ TY I (Y)4"(BRK)(100MIL)	LF	110
0666-6315	RE PM W/RET REQ TY I (Y)4"(SLD)(100MIL)	LF	1240
0672-6007	REFL PAV MRKR TY I-C	EA	43
0672-6009	REFL PAV MRKR TY II-A-A	EA	42

LEGEND

A	4" SLD (W) STRIPE	G	24" SLD (Y) STRIPE
B	4" SLD (Y) STRIPE	H	WHITE ARROW
C	4" BRK (W) STRIPE	I	WHITE WORD
D	4" BRK (Y) STRIPE	J	MEDIAN NOSE (Y)
E	8" SLD (W) STRIPE	K	REFL PAV MRKR TY I-C
F	24" SLD (W) STRIPE	L	REFL PAV MRKR TY II-A-A
	TRAFFIC SIGN	M	REFL PAV MRKR TY II-B-B

NOTES

1. FOR ADDITIONAL DETAILS SEE TxDOT TYPICAL STANDARD SHEETS.
2. EXISTING FEATURES ARE SHOWN SCREENED BACK.
3. ALL REFLECTIVE PAVEMENT MARKINGS SHALL RECEIVE A TY I AND TY II APPLICATION.
4. ALL DIMENSIONS ARE TO FACE OF CURB AND/OR CENTER OF PAVEMENT MARKINGS, UNLESS OTHERWISE INDICATED.

DESIGN

INTERIM REVIEW
DOCUMENT INCOMPLETE. NOT INTENDED FOR PERMIT, BIDDING OR CONSTRUCTION.
ENGINEER: TYLER PAYNE DUBE
P.E. SERIAL NO: 118612
DATE: 1/9/2020

APPROVAL

INTERIM REVIEW
DOCUMENT INCOMPLETE. NOT INTENDED FOR PERMIT, BIDDING OR CONSTRUCTION.
ENGINEER: JOHN A. TYLER
P.E. SERIAL NO: 105193
DATE: 1/9/2020

0 10 20 30 60

SCALE: PLAN 1"= 30'

REV. NO.	DATE	DESCRIPTION	BY

PAPE-DAWSON ENGINEERS
SAN ANTONIO | AUSTIN | HOUSTON | FORT WORTH | DALLAS
2000 NW LOOP 410 | SAN ANTONIO, TX 78213 | 210.375.9000
TBPE FIRM REGISTRATION #470 | TBPLS FIRM REGISTRATION #10028800

City of New Braunfels

KLEIN RD PHASE 2

SIGNING AND PAVEMENT MARKING LAYOUT

STA 106+50 TO STA 112+50

SHEET 2 OF 9

DGN:	STATE	PROJECT NO.	ROADWAY
CHK DGN:	TEXAS	NB 18-026	KLEIN RD
DWG:	COUNTY	CITY	SHEET NO.
CHK DWG:	GUADALUPE	NEW BRAUNFELS	168

Plotted on: 1/9/2020

Design Filename: H:\Projects\510\30\03\Design\Civil\Traffic\5103003pm02.dgn

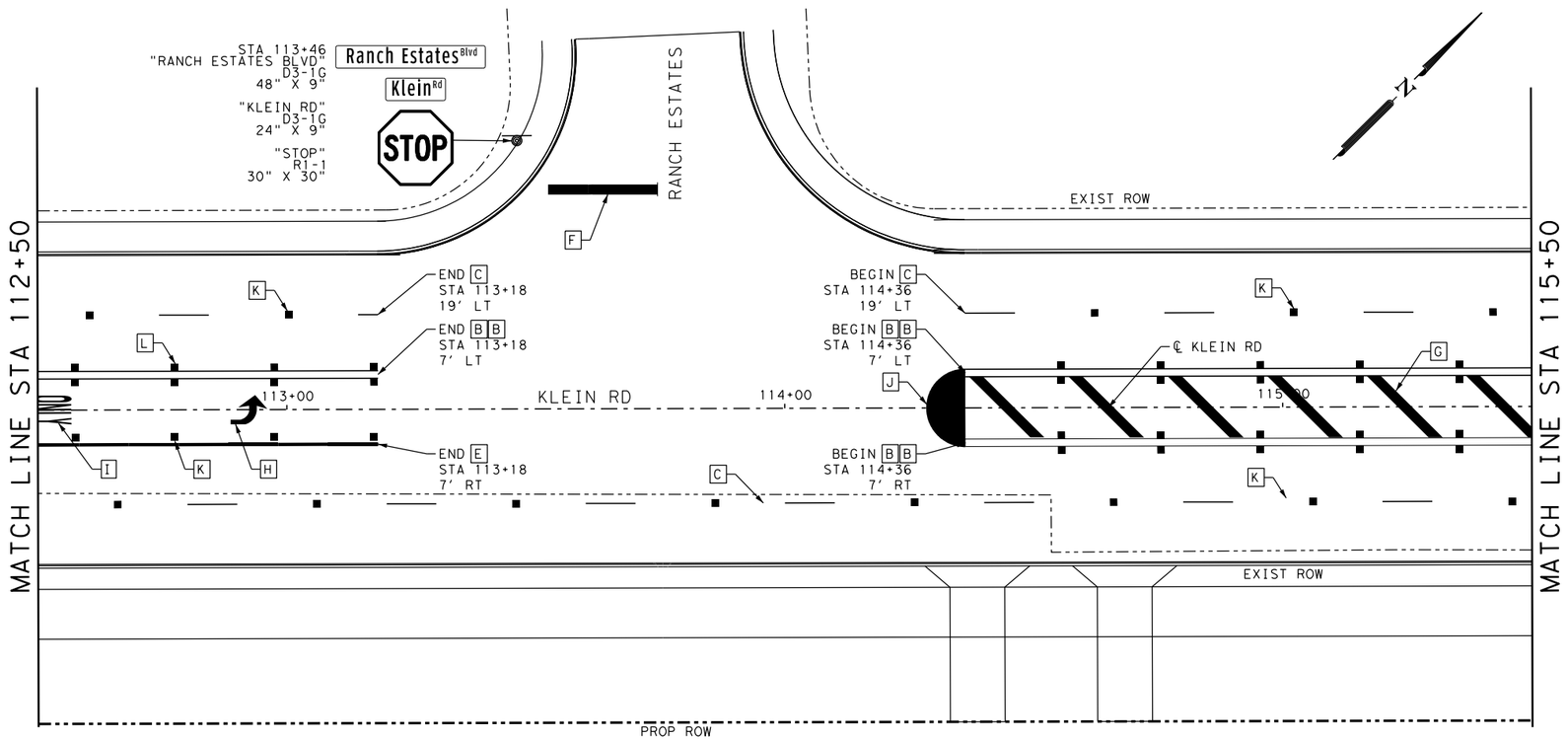

ITEM	DESCRIPTION	UNIT	QTY
0644-6001	IN SM RD SN SUP&AM TY10BWG(1)SA(P)	EA	1
0666-6036	REFL PAV MRK TY I (W)8"(SLD)(100MIL)	LF	316
0666-6048	REFL PAV MRK TY I (W)24"(SLD)(100MIL)	LF	22
0666-6054	REFL PAV MRK TY I (W)(ARROW)(100MIL)	EA	2
0666-6078	REFL PAV MRK TY I (W)(WORD)(100MIL)	EA	2
0666-6090	REF PAV MRK TY I (W)(MED NOSE)(100MIL)	EA	1
0666-6147	REFL PAV MRK TY I (Y)24"(SLD)(100MIL)	LF	127
0666-6224	PAVEMENT SEALER 4"	LF	1570
0666-6226	PAVEMENT SEALER 8"	LF	316
0666-6230	PAVEMENT SEALER 24"	LF	149
0666-6231	PAVEMENT SEALER (ARROW)	EA	2
0666-6232	PAVEMENT SEALER (WORD)	EA	2
0666-6233	PAVEMENT SEALER (MED NOSE)	EA	1
0666-6300	RE PM W/RET REQ TY I (W)4"(BRK)(100MIL)	LF	270
0666-6315	RE PM W/RET REQ TY I (Y)4"(SLD)(100MIL)	LF	1300
0672-6007	REFL PAV MRKR TY I-C	EA	43
0672-6009	REFL PAV MRKR TY II-A-A	EA	66

LEGEND

A	4" SLD (W) STRIPE	G	24" SLD (Y) STRIPE
B	4" SLD (Y) STRIPE	H	WHITE ARROW
C	4" BRK (W) STRIPE	I	WHITE WORD
D	4" BRK (Y) STRIPE	J	MEDIAN NOSE (Y)
E	8" SLD (W) STRIPE	K	REFL PAV MRKR TY I-C
F	24" SLD (W) STRIPE	L	REFL PAV MRKR TY II-A-A
	TRAFFIC SIGN	M	REFL PAV MRKR TY II-B-B

NOTES

1. FOR ADDITIONAL DETAILS SEE TxDOT TYPICAL STANDARD SHEETS.
2. EXISTING FEATURES ARE SHOWN SCREENED BACK.
3. ALL REFLECTIVE PAVEMENT MARKINGS SHALL RECEIVE A TY I AND TY II APPLICATION.
4. ALL DIMENSIONS ARE TO FACE OF CURB AND/OR CENTER OF PAVEMENT MARKINGS, UNLESS OTHERWISE INDICATED.

DESIGN

INTERIM REVIEW
DOCUMENT INCOMPLETE. NOT INTENDED FOR PERMIT, BIDDING OR CONSTRUCTION.
ENGINEER: TYLER PAYNE DUBE
P.E. SERIAL NO: 118612
DATE: 1/9/2020

APPROVAL

INTERIM REVIEW
DOCUMENT INCOMPLETE. NOT INTENDED FOR PERMIT, BIDDING OR CONSTRUCTION.
ENGINEER: JOHN A. TYLER
P.E. SERIAL NO: 105193
DATE: 1/9/2020

0 10 20 30 60

SCALE: PLAN 1"= 30'

REV. NO.	DATE	DESCRIPTION	BY

PAPE-DAWSON ENGINEERS
SAN ANTONIO | AUSTIN | HOUSTON | FORT WORTH | DALLAS
2000 NW LOOP 410 | SAN ANTONIO, TX 78213 | 210.375.9000
TBPE FIRM REGISTRATION #470 | TBPLS FIRM REGISTRATION #10028800

City of New Braunfels

KLEIN RD PHASE 2

SIGNING AND PAVEMENT MARKING LAYOUT

STA 112+50 TO STA 118+50

SHEET 3 OF 9

DGN:	STATE	PROJECT NO.	ROADWAY
CHK DGN:	TEXAS	NB 18-026	KLEIN RD
DWG:	COUNTY	CITY	SHEET NO.
CHK DWG:	GUADALUPE	NEW BRAUNFELS	169

Plotted on: 1/9/2020

Design Filename: H:\Projects\510\30\03\Design\Civil\Traffic\5103003pm03.dgn

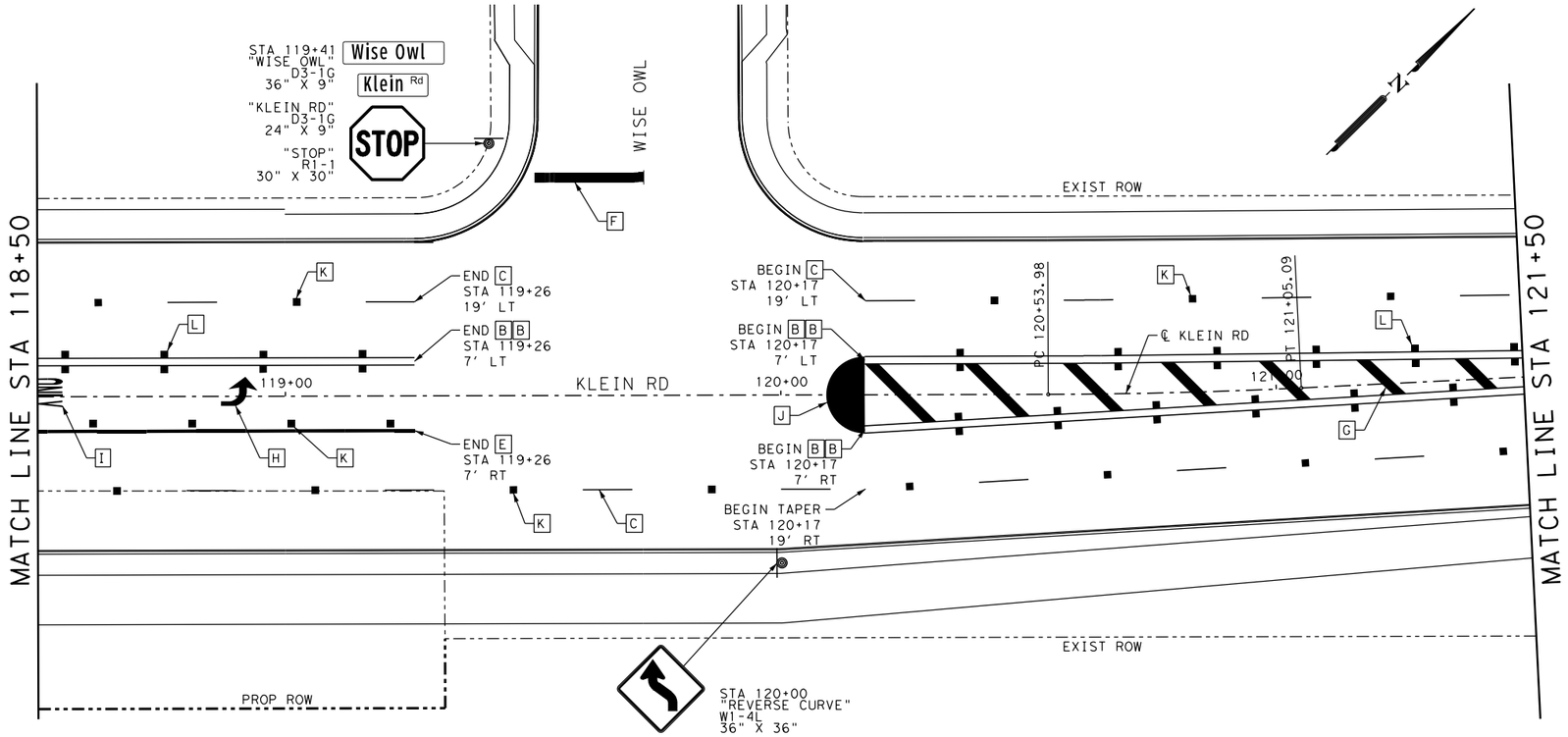

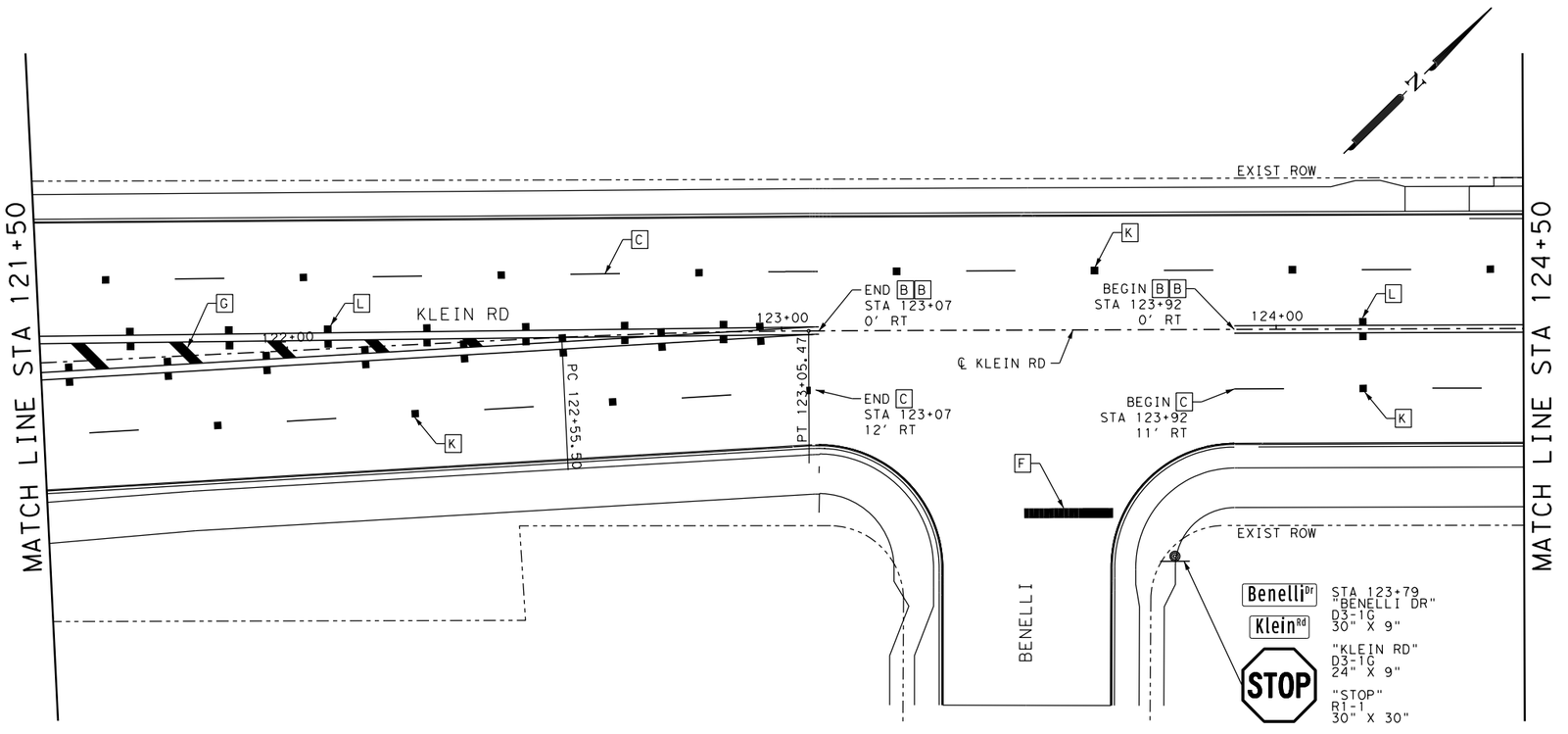

ITEM	DESCRIPTION	UNIT	QTY
0644-6001	IN SM RD SN SUP&AM TY10BWG(1)SA(P)	EA	2
0644-6060	IN SM RD SN SUP&AM TYTWT(1)WS(P)	EA	1
0666-6036	REFL PAV MRK TY I (W)8"(SLD)(100MIL)	LF	76
0666-6048	REFL PAV MRK TY I (W)24"(SLD)(100MIL)	LF	40
0666-6054	REFL PAV MRK TY I (W)(ARROW)(100MIL)	EA	1
0666-6078	REFL PAV MRK TY I (W)(WORD)(100MIL)	EA	1
0666-6090	REF PAV MRK TY I (W)(MED NOSE)(100MIL)	EA	1
0666-6147	REFL PAV MRK TY I (Y)24"(SLD)(100MIL)	LF	112
0666-6224	PAVEMENT SEALER 4"	LF	1692
0666-6226	PAVEMENT SEALER 8"	LF	76
0666-6230	PAVEMENT SEALER 24"	LF	152
0666-6231	PAVEMENT SEALER (ARROW)	EA	1
0666-6232	PAVEMENT SEALER (WORD)	EA	1
0666-6233	PAVEMENT SEALER (MED NOSE)	EA	1
0666-6300	RE PM W/RET REQ TY I (W)4"(BRK)(100MIL)	LF	260
0666-6315	RE PM W/RET REQ TY I (Y)4"(SLD)(100MIL)	LF	1432
0672-6007	REFL PAV MRKR TY I-C	EA	30
0672-6009	REFL PAV MRKR TY II-A-A	EA	72

LEGEND

A	4" SLD (W) STRIPE	G	24" SLD (Y) STRIPE
B	4" SLD (Y) STRIPE	H	WHITE ARROW
C	4" BRK (W) STRIPE	I	WHITE WORD
D	4" BRK (Y) STRIPE	J	MEDIAN NOSE (Y)
E	8" SLD (W) STRIPE	K	REFL PAV MRKR TY I-C
F	24" SLD (W) STRIPE	L	REFL PAV MRKR TY II-A-A
	TRAFFIC SIGN	M	REFL PAV MRKR TY II-B-B

NOTES

1. FOR ADDITIONAL DETAILS SEE TxDOT TYPICAL STANDARD SHEETS.
2. EXISTING FEATURES ARE SHOWN SCREENED BACK.
3. ALL REFLECTIVE PAVEMENT MARKINGS SHALL RECEIVE A TY I AND TY II APPLICATION.
4. ALL DIMENSIONS ARE TO FACE OF CURB AND/OR CENTER OF PAVEMENT MARKINGS, UNLESS OTHERWISE INDICATED.

DESIGN

INTERIM REVIEW

DOCUMENT INCOMPLETE. NOT INTENDED FOR PERMIT, BIDDING OR CONSTRUCTION.
ENGINEER: TYLER PAYNE DUBE
P.E. SERIAL NO: 118612
DATE: 1/9/2020

APPROVAL

INTERIM REVIEW

DOCUMENT INCOMPLETE. NOT INTENDED FOR PERMIT, BIDDING OR CONSTRUCTION.
ENGINEER: JOHN A. TYLER
P.E. SERIAL NO: 105193
DATE: 1/9/2020

0 10 20 30 60

SCALE: PLAN 1" = 30'

REV. NO.	DATE	DESCRIPTION	BY

PAPE-DAWSON ENGINEERS
SAN ANTONIO | AUSTIN | HOUSTON | FORT WORTH | DALLAS
2000 NW LOOP 410 | SAN ANTONIO, TX 78213 | 210.375.9000
TBPE FIRM REGISTRATION #470 | TBPLS FIRM REGISTRATION #10028800

City of New Braunfels

KLEIN RD PHASE 2

SIGNING AND PAVEMENT MARKING LAYOUT

STA 118+50 TO STA 124+50

SHEET 4 OF 9

DGN:	STATE	PROJECT NO.	ROADWAY
CHK DGN:	TEXAS	NB 18-026	KLEIN RD
DWG:	COUNTY	CITY	SHEET NO.
CHK DWG:	GUADALUPE	NEW BRAUNFELS	170

Plotted on: 1/9/2020

Design Filename: H:\Projects\510\30\03\Design\Civil\Traffic\5103003pm04.dgn

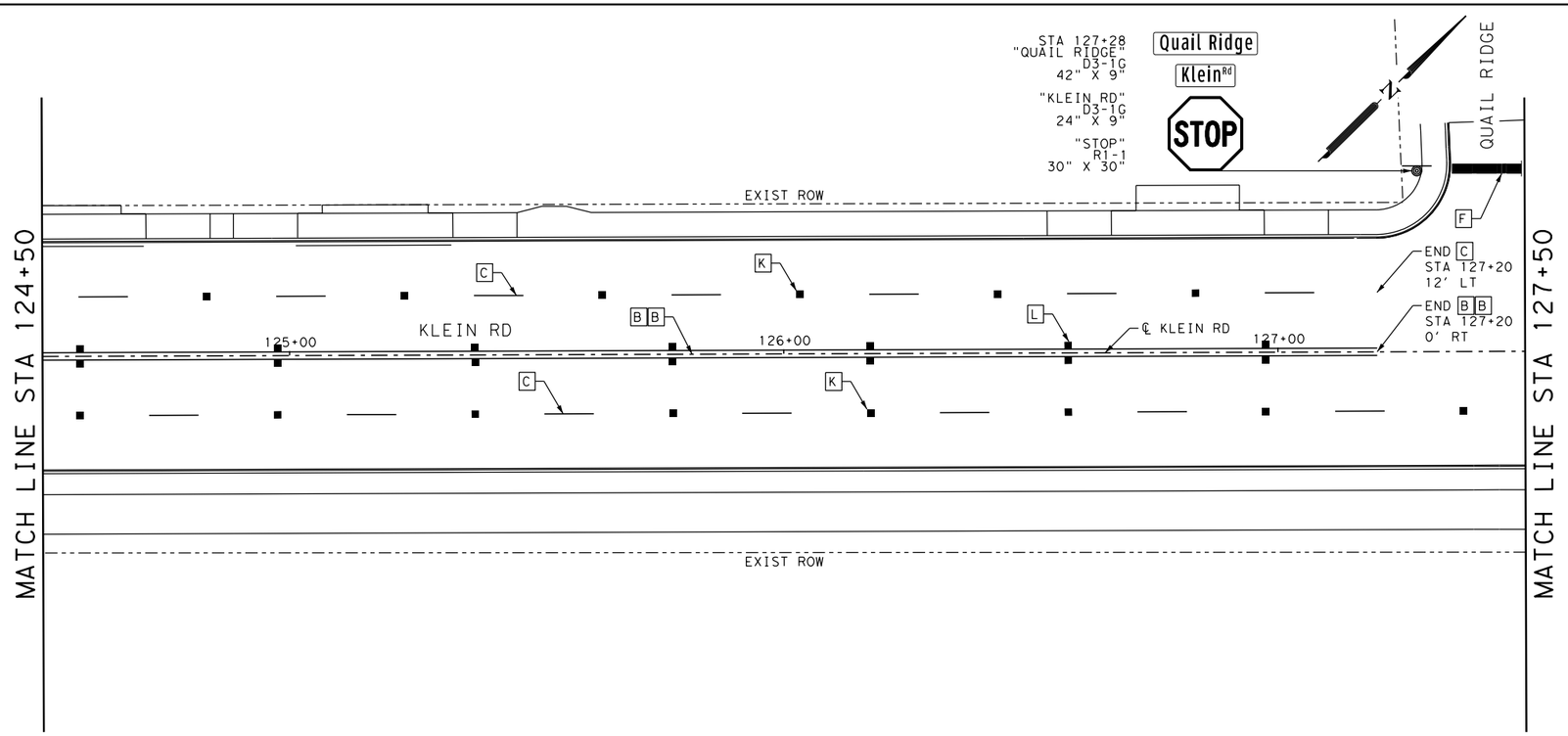

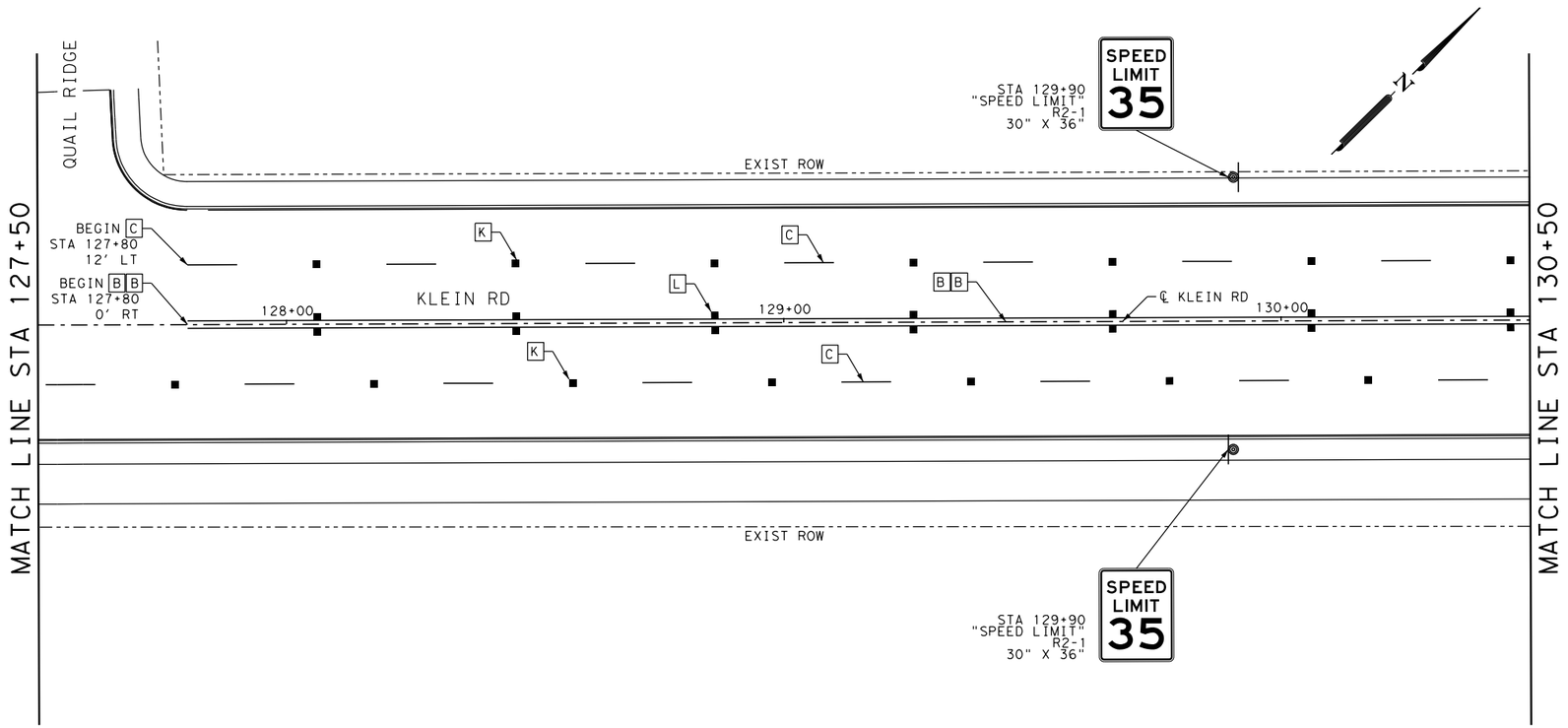

ITEM	DESCRIPTION	UNIT	QTY
0644-6001	IN SM RD SN SUP&AM TY10BWG(1)SA(P)	EA	1
0644-6060	IN SM RD SN SUP&AM TYTWT(1)WS(P)	EA	2
0666-6048	REFL PAV MRK TY I (W)24"(SLD)(100MIL)	LF	14
0666-6224	PAVEMENT SEALER 4"	LF	1370
0666-6230	PAVEMENT SEALER 24"	LF	14
0666-6300	RE PM W/RET REQ TY I (W)4"(BRK)(100MIL)	LF	290
0666-6315	RE PM W/RET REQ TY I (Y)4"(SLD)(100MIL)	LF	1080
0672-6007	REFL PAV MRKR TY I-C	EA	29
0672-6009	REFL PAV MRKR TY II-A-A	EA	28

LEGEND

A	4" SLD (W) STRIPE	G	24" SLD (Y) STRIPE
B	4" SLD (Y) STRIPE	H	WHITE ARROW
C	4" BRK (W) STRIPE	I	WHITE WORD
D	4" BRK (Y) STRIPE	J	MEDIAN NOSE (Y)
E	8" SLD (W) STRIPE	K	REFL PAV MRKR TY I-C
F	24" SLD (W) STRIPE	L	REFL PAV MRKR TY II-A-A
	TRAFFIC SIGN	M	REFL PAV MRKR TY II-B-B

NOTES

1. FOR ADDITIONAL DETAILS SEE TxDOT TYPICAL STANDARD SHEETS.
2. EXISTING FEATURES ARE SHOWN SCREENED BACK.
3. ALL REFLECTIVE PAVEMENT MARKINGS SHALL RECEIVE A TY I AND TY II APPLICATION.
4. ALL DIMENSIONS ARE TO FACE OF CURB AND/OR CENTER OF PAVEMENT MARKINGS, UNLESS OTHERWISE INDICATED.

DESIGN

INTERIM REVIEW

DOCUMENT INCOMPLETE. NOT INTENDED FOR PERMIT, BIDDING OR CONSTRUCTION.
ENGINEER: TYLER PAYNE DUBE
P.E. SERIAL NO: 118612
DATE: 1/9/2020

APPROVAL

INTERIM REVIEW

DOCUMENT INCOMPLETE. NOT INTENDED FOR PERMIT, BIDDING OR CONSTRUCTION.
ENGINEER: JOHN A. TYLER
P.E. SERIAL NO: 105193
DATE: 1/9/2020

0 10 20 30 60

SCALE: PLAN 1"= 30'

REV. NO.	DATE	DESCRIPTION	BY

PAPE-DAWSON ENGINEERS
SAN ANTONIO | AUSTIN | HOUSTON | FORT WORTH | DALLAS
2000 NW LOOP 410 | SAN ANTONIO, TX 78213 | 210.375.9000
TBPE FIRM REGISTRATION #470 | TBPLS FIRM REGISTRATION #10028800

City of New Braunfels

KLEIN RD PHASE 2

SIGNING AND PAVEMENT MARKING LAYOUT

STA 124+50 TO STA 130+50

DGN:	STATE	PROJECT NO.	ROADWAY
CHK DGN:	TEXAS	NB 18-026	KLEIN RD
DWG:	COUNTY	CITY	SHEET NO.
CHK DWG:	GUADALUPE	NEW BRAUNFELS	171

Plotted on: 1/9/2020

Design Filename: H:\Projects\510\30\03\Design\Civil\Traffic\5103003pm05.dgn

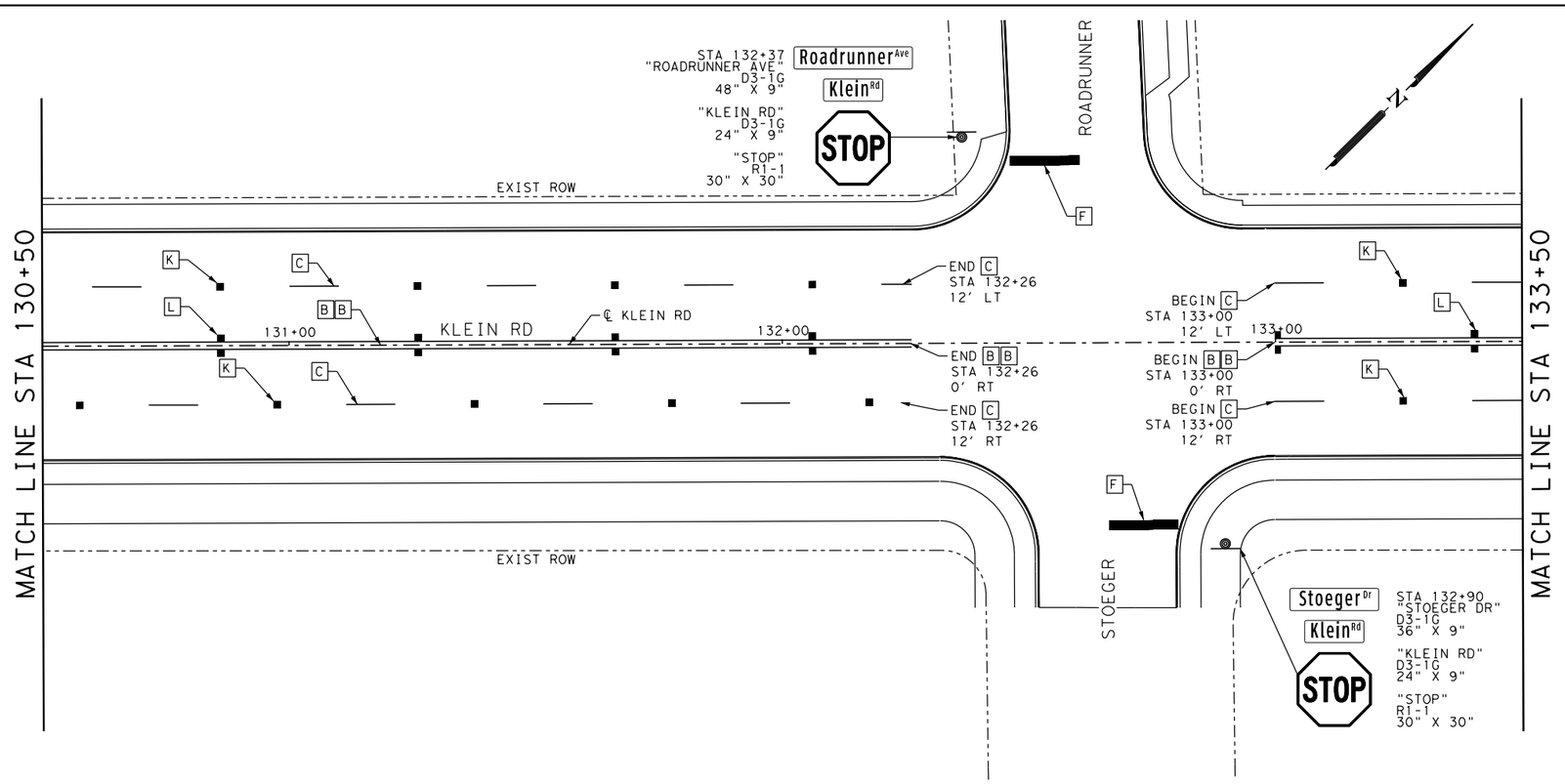

ITEM	DESCRIPTION	UNIT	QTY
0644-6001	IN SM RD SN SUP&AM TY10BWG(1)SA(P)	EA	2
0666-6048	REFL PAV MRK TY I (W)24"(SLD)(100MIL)	LF	28
0666-6147	REFL PAV MRK TY I (Y)24"(SLD)(100MIL)	LF	56
0666-6224	PAVEMENT SEALER 4"	LF	1704
0666-6230	PAVEMENT SEALER 24"	LF	84
0666-6300	RE PM W/RET REQ TY I (W)4"(BRK)(100MIL)	LF	270
0666-6315	RE PM W/RET REQ TY I (Y)4"(SLD)(100MIL)	LF	1434
0672-6007	REFL PAV MRKR TY I-C	EA	27
0672-6009	REFL PAV MRKR TY II-A-A	EA	54

LEGEND

A	4" SLD (W) STRIPE	G	24" SLD (Y) STRIPE
B	4" SLD (Y) STRIPE	H	WHITE ARROW
C	4" BRK (W) STRIPE	I	WHITE WORD
D	4" BRK (Y) STRIPE	J	MEDIAN NOSE (Y)
E	8" SLD (W) STRIPE	K	REFL PAV MRKR TY I-C
F	24" SLD (W) STRIPE	L	REFL PAV MRKR TY II-A-A
	TRAFFIC SIGN	M	REFL PAV MRKR TY II-B-B

NOTES

1. FOR ADDITIONAL DETAILS SEE TxDOT TYPICAL STANDARD SHEETS.
2. EXISTING FEATURES ARE SHOWN SCREENED BACK.
3. ALL REFLECTIVE PAVEMENT MARKINGS SHALL RECEIVE A TY I AND TY II APPLICATION.
4. ALL DIMENSIONS ARE TO FACE OF CURB AND/OR CENTER OF PAVEMENT MARKINGS, UNLESS OTHERWISE INDICATED.

DESIGN

INTERIM REVIEW
DOCUMENT INCOMPLETE. NOT INTENDED FOR PERMIT, BIDDING OR CONSTRUCTION.
ENGINEER: TYLER PAYNE DUBE
P.E. SERIAL NO: 118612
DATE: 1/9/2020

APPROVAL

INTERIM REVIEW
DOCUMENT INCOMPLETE. NOT INTENDED FOR PERMIT, BIDDING OR CONSTRUCTION.
ENGINEER: JOHN A. TYLER
P.E. SERIAL NO: 105193
DATE: 1/9/2020

0 10 20 30 60

SCALE: PLAN 1"= 30'

REV. NO.	DATE	DESCRIPTION	BY

PAPE-DAWSON ENGINEERS
SAN ANTONIO | AUSTIN | HOUSTON | FORT WORTH | DALLAS
2000 NW LOOP 410 | SAN ANTONIO, TX 78213 | 210.375.9000
TBPE FIRM REGISTRATION #470 | TBPLS FIRM REGISTRATION #10028800

City of New Braunfels

KLEIN RD PHASE 2

SIGNING AND PAVEMENT MARKING LAYOUT

STA 130+50 TO STA 136+50

SHEET 6 OF 9

DGN:	STATE	PROJECT NO.	ROADWAY
CHK DGN:	TEXAS	NB 18-026	KLEIN RD
DWG:	COUNTY	CITY	SHEET NO.
CHK DWG:	GUADALUPE	NEW BRAUNFELS	172

Plotted on: 1/9/2020

Design Filename: H:\Projects\510\30\03\Design\Civil\Traffic\5103003pm06.dgn

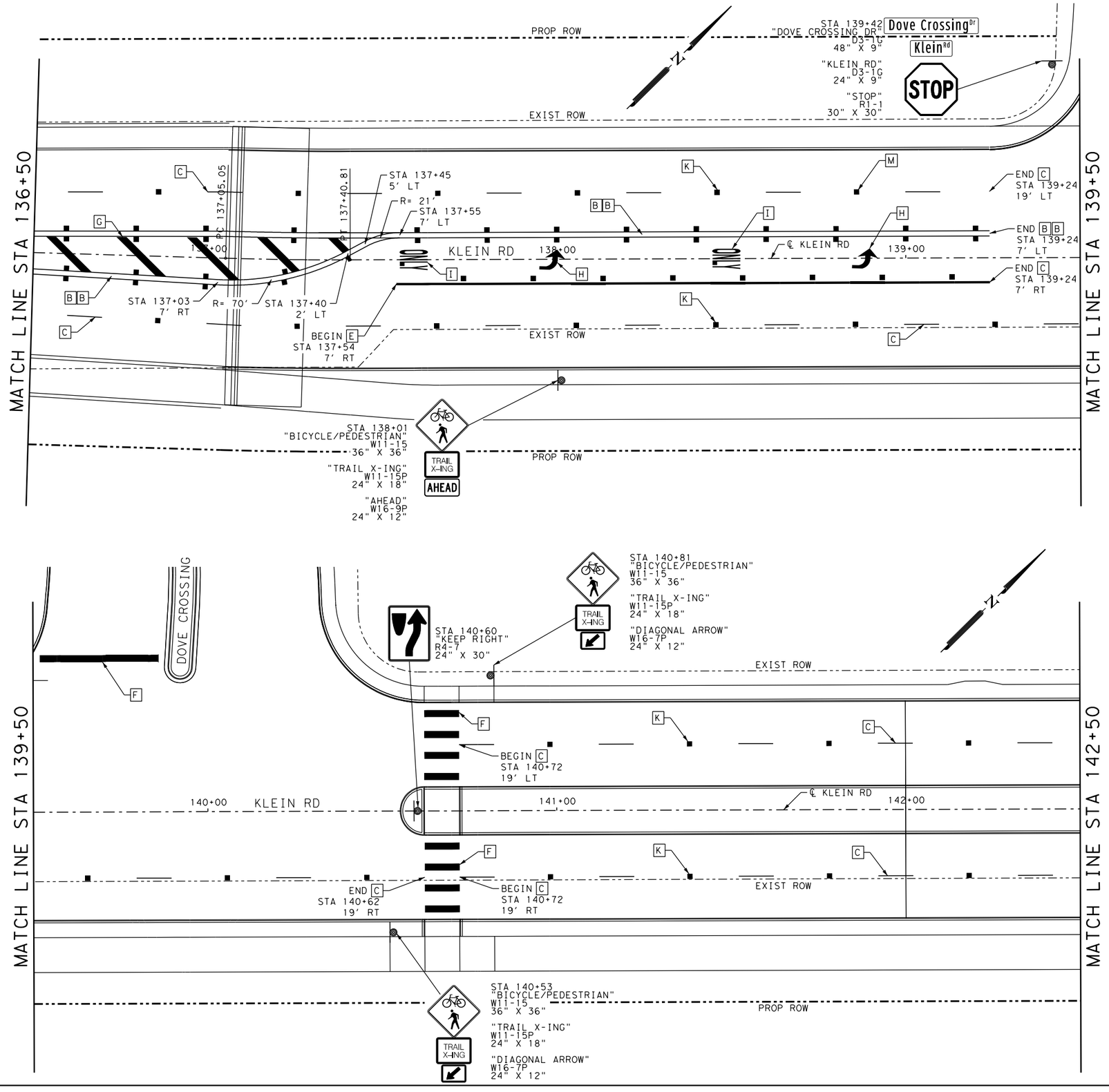

ITEM	DESCRIPTION	UNIT	QTY
0644-6001	IN SM RD SN SUP&AM TY10BWG(1)SA(P)	EA	4
0644-6060	IN SM RD SN SUP&AM TYTWT(1)WS(P)	EA	1
0666-6036	REFL PAV MRK TY I (W)8"(SLD)(100MIL)	LF	170
0666-6048	REFL PAV MRK TY I (W)24"(SLD)(100MIL)	LF	114
0666-6054	REFL PAV MRK TY I (W)(ARROW)(100MIL)	EA	2
0666-6078	REFL PAV MRK TY I (W)(WORD)(100MIL)	EA	2
0666-6147	REFL PAV MRK TY I (Y)24"(SLD)(100MIL)	LF	68
0666-6224	PAVEMENT SEALER 4"	LF	1034
0666-6226	PAVEMENT SEALER 8"	LF	170
0666-6230	PAVEMENT SEALER 24"	LF	182
0666-6231	PAVEMENT SEALER (ARROW)	EA	2
0666-6232	PAVEMENT SEALER (WORD)	EA	2
0666-6300	RE PM W/RET REQ TY I (W)4"(BRK)(100MIL)	LF	270
0666-6315	RE PM W/RET REQ TY I (Y)4"(SLD)(100MIL)	LF	764
0672-5009	REFL PAV MRKR TY II-B-B	EA	1
0672-6007	REFL PAV MRKR TY I-C	EA	36
0672-6009	REFL PAV MRKR TY II-A-A	EA	38

LEGEND

A	4" SLD (W) STRIPE	G	24" SLD (Y) STRIPE
B	4" SLD (Y) STRIPE	H	WHITE ARROW
C	4" BRK (W) STRIPE	I	WHITE WORD
D	4" BRK (Y) STRIPE	J	MEDIAN NOSE (Y)
E	8" SLD (W) STRIPE	K	REFL PAV MRKR TY I-C
F	24" SLD (W) STRIPE	L	REFL PAV MRKR TY II-A-A
	TRAFFIC SIGN	M	REFL PAV MRKR TY II-B-B

NOTES

1. FOR ADDITIONAL DETAILS SEE TxDOT TYPICAL STANDARD SHEETS.
2. EXISTING FEATURES ARE SHOWN SCREENED BACK.
3. ALL REFLECTIVE PAVEMENT MARKINGS SHALL RECEIVE A TY I AND TY II APPLICATION.
4. ALL DIMENSIONS ARE TO FACE OF CURB AND/OR CENTER OF PAVEMENT MARKINGS, UNLESS OTHERWISE INDICATED.

DESIGN

INTERIM REVIEW
DOCUMENT INCOMPLETE. NOT INTENDED FOR PERMIT, BIDDING OR CONSTRUCTION.
ENGINEER: TYLER PAYNE DUBE
P.E. SERIAL NO: 118612
DATE: 1/9/2020

APPROVAL

INTERIM REVIEW
DOCUMENT INCOMPLETE. NOT INTENDED FOR PERMIT, BIDDING OR CONSTRUCTION.
ENGINEER: JOHN A. TYLER
P.E. SERIAL NO: 105193
DATE: 1/9/2020

0 10 20 30 60

SCALE: PLAN 1"= 30'

REV. NO.	DATE	DESCRIPTION	BY

PAPE-DAWSON ENGINEERS
SAN ANTONIO | AUSTIN | HOUSTON | FORT WORTH | DALLAS
2000 NW LOOP 410 | SAN ANTONIO, TX 78213 | 210.375.9000
TBPE FIRM REGISTRATION #470 | TBPLS FIRM REGISTRATION #10028800

City of New Braunfels

KLEIN RD PHASE 2

SIGNING AND PAVEMENT MARKING LAYOUT

STA 136+50 TO STA 142+50

SHEET 7 OF 9

DGN:	STATE	PROJECT NO.	ROADWAY
CHK DGN:	TEXAS	NB 18-026	KLEIN RD
DWG:	COUNTY	CITY	SHEET NO.
CHK DWG:	GUADALUPE	NEW BRAUNFELS	173

Plotted on: 1/9/2020

Design Filename: H:\Projects\510\30\03\Design\Civil\Traffic\5103003pm07.dgn

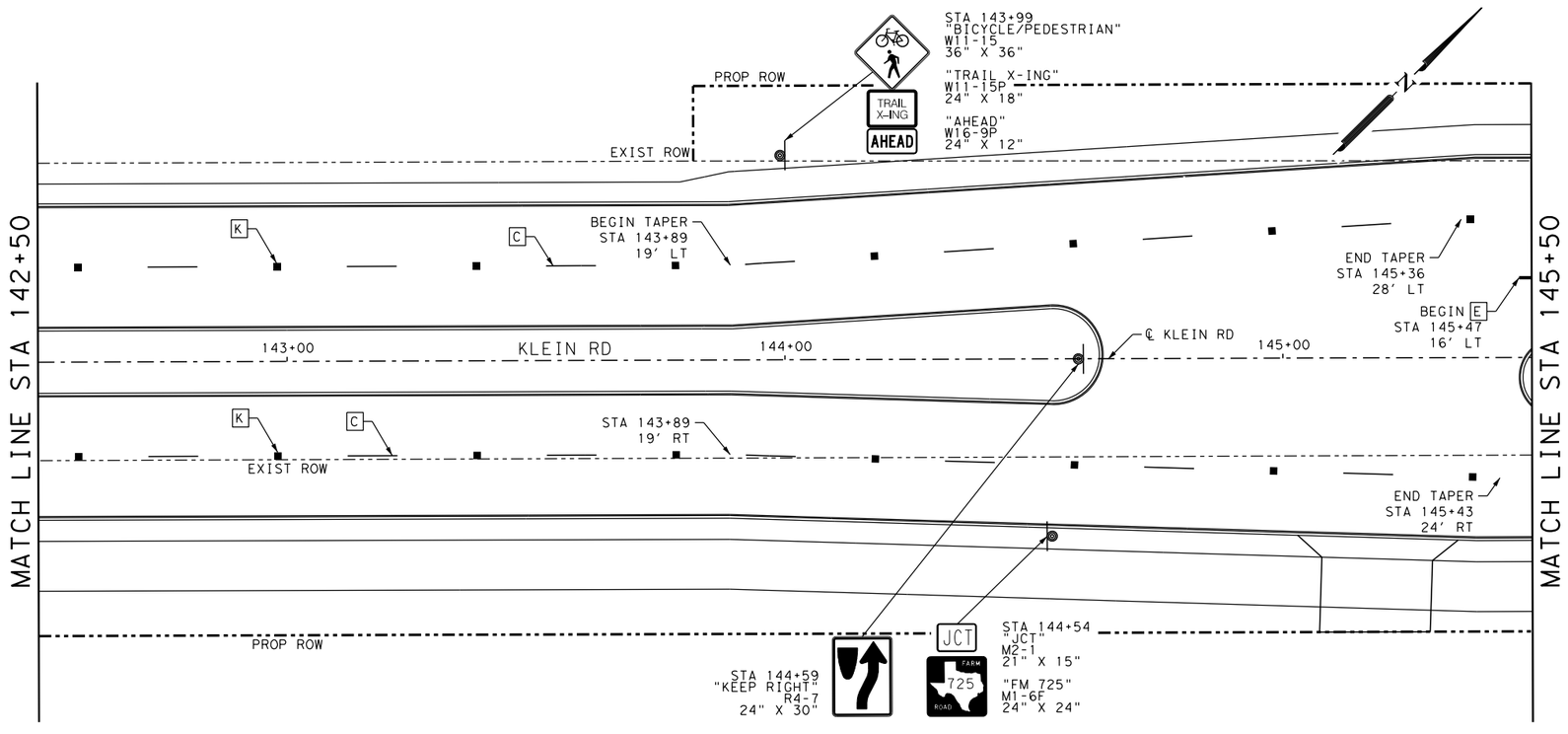

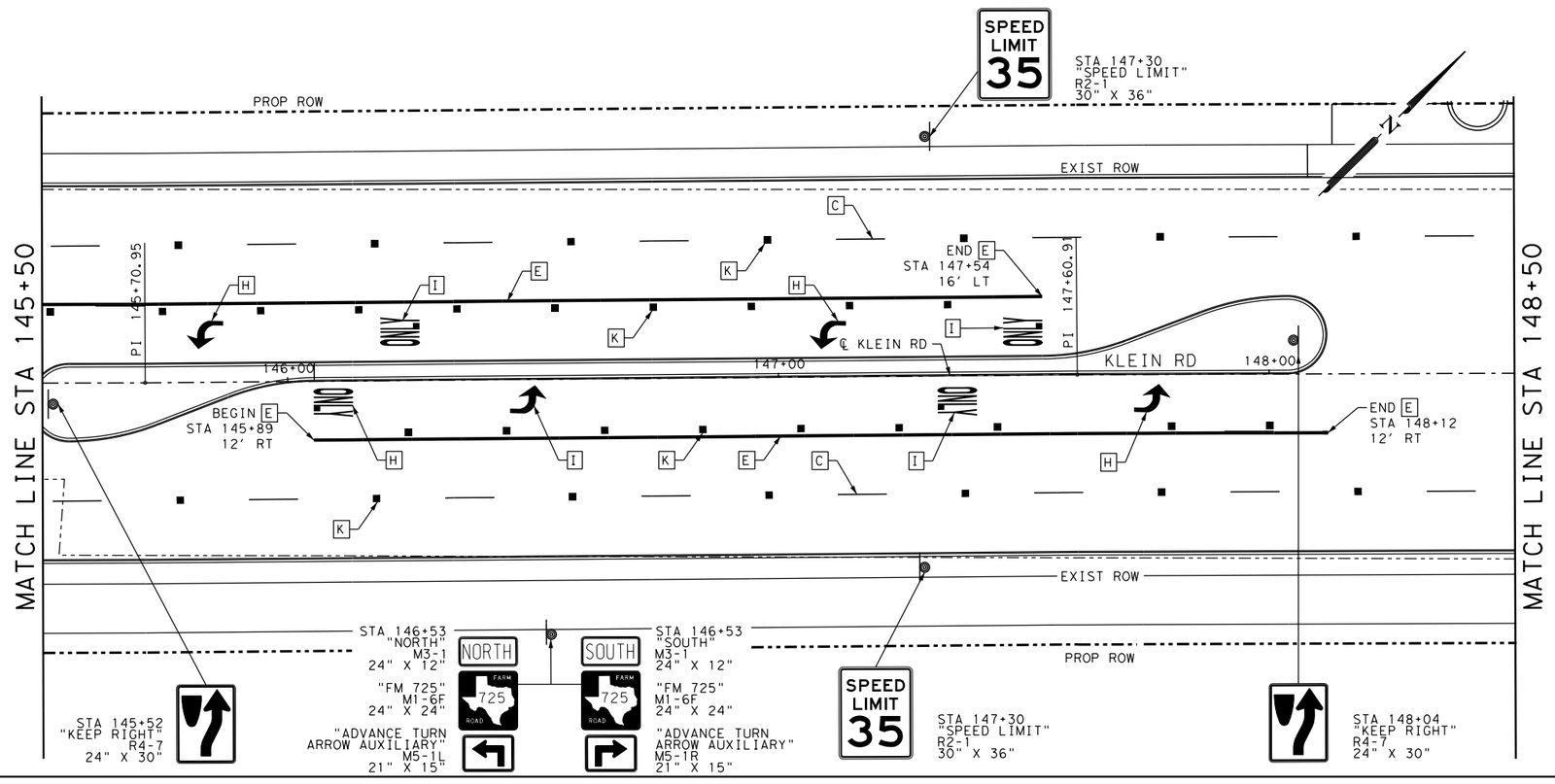

ITEM	DESCRIPTION	UNIT	QTY
0644-6001	IN SM RD SN SUP&AM TY10BWG(1)SA(P)	EA	1
0644-6007	IN SM RD SN SUP&AM TY10BWG(1)SA(U)	EA	1
0644-6060	IN SM RD SN SUP&AM TYTWT(1)WS(P)	EA	6
0666-6036	REFL PAV MRK TY I (W)8"(SLD)(100MIL)	LF	414
0666-6054	REFL PAV MRK TY I (W)(ARROW)(100MIL)	EA	4
0666-6078	REFL PAV MRK TY I (W)(WORD)(100MIL)	EA	4
0666-6224	PAVEMENT SEALER 4"	LF	300
0666-6226	PAVEMENT SEALER 8"	LF	414
0666-6231	PAVEMENT SEALER (ARROW)	EA	4
0666-6232	PAVEMENT SEALER (WORD)	EA	4
0666-6300	RE PM W/RET REQ TY I (W)4"(BRK)(100MIL)	LF	300
0672-6007	REFL PAV MRKR TY I-C	EA	51

LEGEND

- A — 4" SLD (W) STRIPE
- B — 4" SLD (Y) STRIPE
- C — 4" BRK (W) STRIPE
- D — 4" BRK (Y) STRIPE
- E — 8" SLD (W) STRIPE
- F — 24" SLD (W) STRIPE
- TRAFFIC SIGN
- G — 24" SLD (Y) STRIPE
- H — WHITE ARROW
- I — WHITE WORD
- J — MEDIAN NOSE (Y)
- K — REFL PAV MRKR TY I-C
- L — REFL PAV MRKR TY II-A-A
- M — REFL PAV MRKR TY II-B-B

NOTES

1. FOR ADDITIONAL DETAILS SEE TxDOT TYPICAL STANDARD SHEETS.
2. EXISTING FEATURES ARE SHOWN SCREENED BACK.
3. ALL REFLECTIVE PAVEMENT MARKINGS SHALL RECEIVE A TY I AND TY II APPLICATION.
4. ALL DIMENSIONS ARE TO FACE OF CURB AND/OR CENTER OF PAVEMENT MARKINGS, UNLESS OTHERWISE INDICATED.

DESIGN

INTERIM REVIEW
DOCUMENT INCOMPLETE. NOT INTENDED FOR PERMIT, BIDDING OR CONSTRUCTION.
ENGINEER: TYLER PAYNE DUBE
P.E. SERIAL NO: 118612
DATE: 1/9/2020

APPROVAL

INTERIM REVIEW
DOCUMENT INCOMPLETE. NOT INTENDED FOR PERMIT, BIDDING OR CONSTRUCTION.
ENGINEER: JOHN A. TYLER
P.E. SERIAL NO: 105193
DATE: 1/9/2020

0 10 20 30 60

SCALE: PLAN 1"= 30'

REV. NO.	DATE	DESCRIPTION	BY

PAPE-DAWSON ENGINEERS
SAN ANTONIO | AUSTIN | HOUSTON | FORT WORTH | DALLAS
2000 NW LOOP 410 | SAN ANTONIO, TX 78213 | 210.375.9000
TBPE FIRM REGISTRATION #470 | TBPLS FIRM REGISTRATION #10028800

City of New Braunfels

KLEIN RD PHASE 2

SIGNING AND PAVEMENT MARKING LAYOUT

STA 142+50 TO STA 148+50

SHEET 8 OF 9

DGN:	STATE	PROJECT NO.	ROADWAY
CHK DGN:	TEXAS	NB 18-026	KLEIN RD
DWG:	COUNTY	CITY	SHEET NO.
CHK DWG:	GUADALUPE	NEW BRAUNFELS	174

Plotted on: 1/9/2020

Design Filename: H:\Projects\510\30\03\Design\Civil\Traffic\5103003pm08.dgn

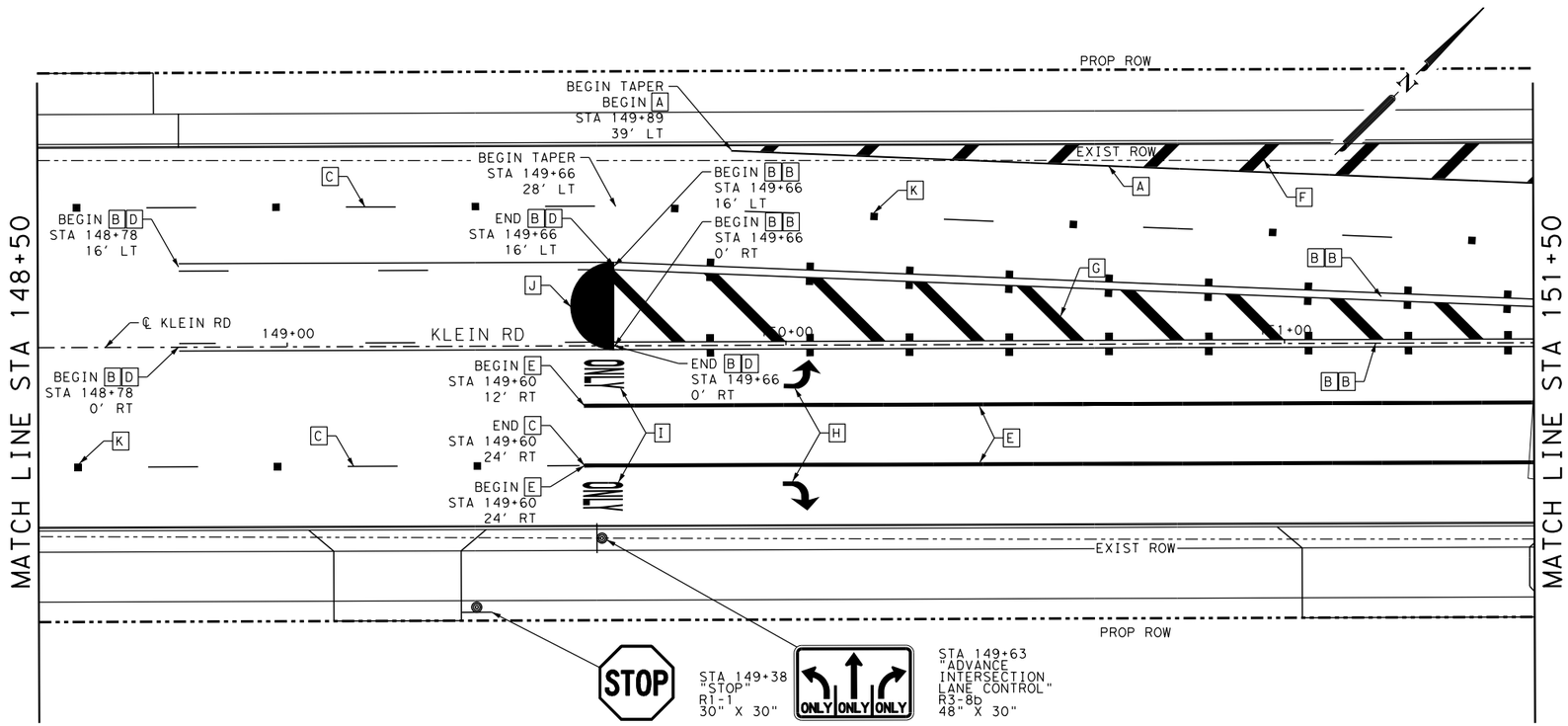

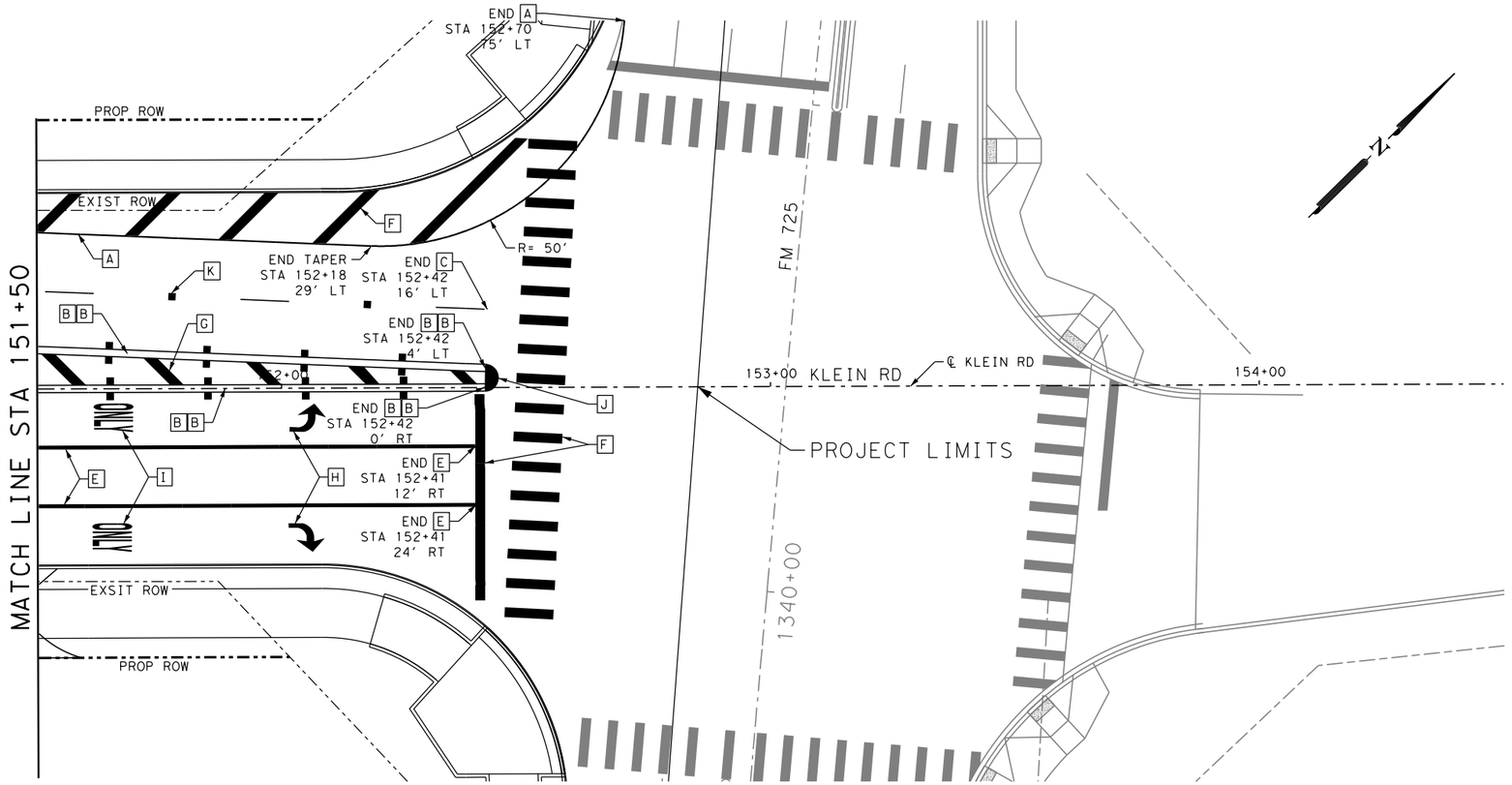

ITEM	DESCRIPTION	UNIT	QTY
0644-6060	IN SM RD SN SUP&AM TYTWT(1)WS(P)	EA	1
0644-6061	IN SM RD SN SUP&AM TYTWT(1)WS(T)	EA	1
0666-6036	REFL PAV MRK TY I (W)8"(SLD)(100MIL)	LF	560
0666-6048	REFL PAV MRK TY I (W)24"(SLD)(100MIL)	LF	340
0666-6054	REFL PAV MRK TY I (W)(ARROW)(100MIL)	EA	4
0666-6078	REFL PAV MRK TY I (W)(WORD)(100MIL)	EA	4
0666-6090	REF PAV MRK TY I (W)(MED NOSE)(100MIL)	EA	2
0666-6147	REFL PAV MRK TY I (Y)24"(SLD)(100MIL)	LF	170
0666-6224	PAVEMENT SEALER 4"	LF	1559
0666-6226	PAVEMENT SEALER 8"	LF	560
0666-6230	PAVEMENT SEALER 24"	LF	510
0666-6231	PAVEMENT SEALER (ARROW)	EA	4
0666-6232	PAVEMENT SEALER (WORD)	EA	4
0666-6233	PAVEMENT SEALER (MED NOSE)	EA	2
0666-6300	RE PM W/RET REQ TY I (W)4"(BRK)(100MIL)	LF	130
0666-6303	RE PM W/RET REQ TY I (W)4"(SLD)(100MIL)	LF	325
0666-6315	RE PM W/RET REQ TY I (Y)4"(SLD)(100MIL)	LF	1104
0672-6007	REFL PAV MRKR TY I-C	EA	13
0672-6009	REFL PAV MRKR TY II-A-A	EA	56

LEGEND

A	4" SLD (W) STRIPE	G	24" SLD (Y) STRIPE
B	4" SLD (Y) STRIPE	H	WHITE ARROW
C	4" BRK (W) STRIPE	I	WHITE WORD
D	4" BRK (Y) STRIPE	J	MEDIAN NOSE (Y)
E	8" SLD (W) STRIPE	K	REFL PAV MRKR TY I-C
F	24" SLD (W) STRIPE	L	REFL PAV MRKR TY II-A-A
	TRAFFIC SIGN	M	REFL PAV MRKR TY II-B-B

NOTES

1. FOR ADDITIONAL DETAILS SEE TxDOT TYPICAL STANDARD SHEETS.
2. EXISTING FEATURES ARE SHOWN SCREENED BACK.
3. ALL REFLECTIVE PAVEMENT MARKINGS SHALL RECEIVE A TY I AND TY II APPLICATION.
4. ALL DIMENSIONS ARE TO FACE OF CURB AND/OR CENTER OF PAVEMENT MARKINGS, UNLESS OTHERWISE INDICATED.

DESIGN

INTERIM REVIEW
DOCUMENT INCOMPLETE. NOT INTENDED FOR PERMIT, BIDDING OR CONSTRUCTION.
ENGINEER: TYLER PAYNE DUBE
P.E. SERIAL NO: 118612
DATE: 1/9/2020

APPROVAL

INTERIM REVIEW
DOCUMENT INCOMPLETE. NOT INTENDED FOR PERMIT, BIDDING OR CONSTRUCTION.
ENGINEER: JOHN A. TYLER
P.E. SERIAL NO: 105193
DATE: 1/9/2020

0 10 20 30 60

SCALE: PLAN 1"= 30'

REV. NO.	DATE	DESCRIPTION	BY

PAPE-DAWSON ENGINEERS
SAN ANTONIO | AUSTIN | HOUSTON | FORT WORTH | DALLAS
2000 NW LOOP 410 | SAN ANTONIO, TX 78213 | 210.375.9000
TBPE FIRM REGISTRATION #470 | TBPLS FIRM REGISTRATION #10028800

City of New Braunfels

KLEIN RD PHASE 2

SIGNING AND PAVEMENT MARKING LAYOUT

STA 148+50 TO END PROJECT

SHEET 9 OF 9

DGN:	STATE	PROJECT NO.	ROADWAY
CHK DGN:	TEXAS	NB 18-026	KLEIN RD
DWG:	COUNTY	CITY	SHEET NO.
CHK DWG:	GUADALUPE	NEW BRAUNFELS	175

Plotted on: 1/9/2020

Design Filename: H:\Projects\510\30\03\Design\Civil\Traffic\5103003pm09.dgn

NOTES:

1. ALL DIMENSIONS ARE IN FEET UNLESS SPECIFIED OTHERWISE.
2. CONTRACTOR SHALL COORDINATE ALL REMOVAL OF TRAFFIC RELATED EQUIPMENT AND SIGNS WITH COSA.
3. EXISTING PAVEMENT MARKINGS TO BE REMOVED SHALL BE GROUND OFF AND SEALED PRIOR TO APPLICATION OF NEW PAVEMENT MARKINGS.
4. ALL TRAFFIC EQUIPMENT DEEMED SALVAGEABLE BY THE CITY INSPECTOR SHALL BE DELIVERED TO THE CITY OF SAN ANTONIO TRAFFIC OPERATIONS FACILITY LOCATED AT 2223 SOUTH CHERRY ST, SAN ANTONIO, TEXAS 78203.
5. UTILITIES SHOWN ARE APPROXIMATE. CONTRACTOR SHALL CALL FOR LOCATES PRIOR TO COMMENCING EXCAVATION. ALL UTILITY LOCATIONS SHALL BE VERIFIED IN THE FIELD BY THE CONTRACTOR.
6. ALL ITEMS NOT SPECIFICALLY CALLED OUT IN THESE PLANS TO BE REMOVED, SHALL REMAIN.

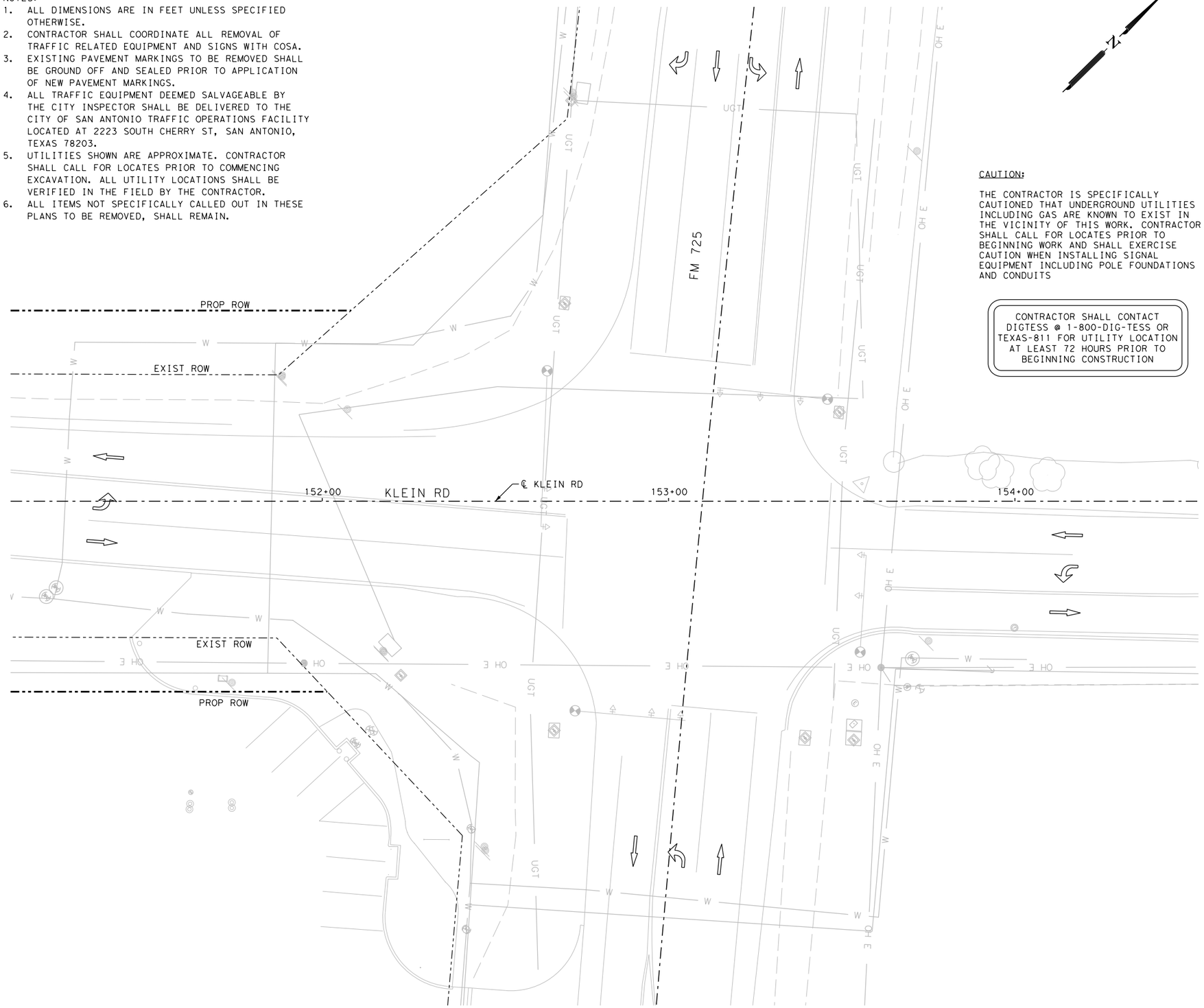

CAUTION:

THE CONTRACTOR IS SPECIFICALLY CAUTIONED THAT UNDERGROUND UTILITIES INCLUDING GAS ARE KNOWN TO EXIST IN THE VICINITY OF THIS WORK. CONTRACTOR SHALL CALL FOR LOCATES PRIOR TO BEGINNING WORK AND SHALL EXERCISE CAUTION WHEN INSTALLING SIGNAL EQUIPMENT INCLUDING POLE FOUNDATIONS AND CONDUITS

CONTRACTOR SHALL CONTACT DIGTESS @ 1-800-DIG-TESS OR TEXAS-811 FOR UTILITY LOCATION AT LEAST 72 HOURS PRIOR TO BEGINNING CONSTRUCTION

LEGEND

- PEDESTRIAN PUSH BUTTON
- TRAFFIC SIGNAL POLE
- TRAFFIC CONTROLLER BOX
- GROUND BOX
- UTILITY POLE
- SIGNAL HEAD

DESIGN

INTERIM REVIEW
DOCUMENT INCOMPLETE. NOT INTENDED FOR PERMIT, BIDDING OR CONSTRUCTION.
ENGINEER: TYLER PAYNE DUBE
P.E. SERIAL NO: 118612
DATE: 1/9/2020

APPROVAL

INTERIM REVIEW
DOCUMENT INCOMPLETE. NOT INTENDED FOR PERMIT, BIDDING OR CONSTRUCTION.
ENGINEER: JOHN A. TYLER
P.E. SERIAL NO: 105193
DATE: 1/9/2020

0 10 20 30 60

SCALE: PLAN 1" = 30'

REV. NO.	DATE	DESCRIPTION	BY

PAPE-DAWSON ENGINEERS
SAN ANTONIO | AUSTIN | HOUSTON | FORT WORTH | DALLAS
2000 NW LOOP 410 | SAN ANTONIO, TX 78213 | 210.375.9000
TBPE FIRM REGISTRATION #470 | TBPLS FIRM REGISTRATION #10028800

City of New Braunfels

KLEIN RD PHASE 2

EXISTING TRAFFIC SIGNAL LAYOUT

SHEET 1 OF 1

DGN:	STATE	PROJECT NO.	ROADWAY
CHK DGN:	TEXAS	NB 18-026	KLEIN RD
DWG:	COUNTY	CITY	SHEET NO.
CHK DWG:	GUADALUPE	NEW BRAUNFELS	176

Plotted on: 1/9/2020

Design Filename: H:\Projects\510\30\03\Design\Civil\Traffic\5103003_WKleinRd_EX Traffic Signal Sheets.dgn

Plotted on: 1/9/2020
Design Filename: H:\Projects\510\30\03\Design\Civil\Traffic\5103003_WKleinRd_Temp Traffic Signal Sheets_Ph2.dgn

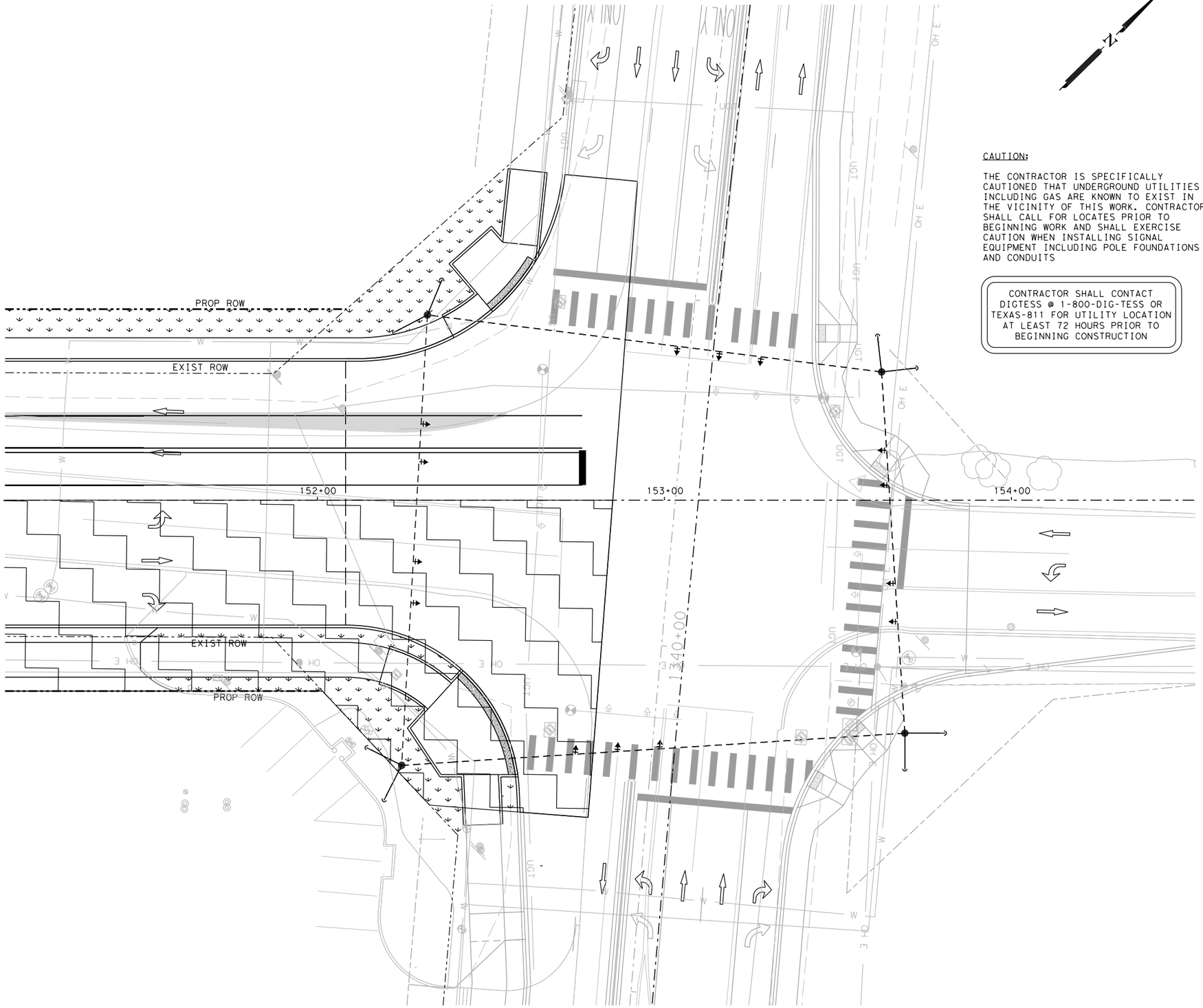

CAUTION:

THE CONTRACTOR IS SPECIFICALLY CAUTIONED THAT UNDERGROUND UTILITIES INCLUDING GAS ARE KNOWN TO EXIST IN THE VICINITY OF THIS WORK. CONTRACTOR SHALL CALL FOR LOCATES PRIOR TO BEGINNING WORK AND SHALL EXERCISE CAUTION WHEN INSTALLING SIGNAL EQUIPMENT INCLUDING POLE FOUNDATIONS AND CONDUITS

CONTRACTOR SHALL CONTACT DIGTESS @ 1-800-DIG-TESS OR TEXAS-811 FOR UTILITY LOCATION AT LEAST 72 HOURS PRIOR TO BEGINNING CONSTRUCTION

LEGEND

- TEMPORARY TRAFFIC SIGNAL POLE
- TRAFFIC SIGNAL SPAN WIRE
- SIGNAL HEAD
- UTILITY POLE
- TEMPORARY GUY ANCHOR
- TCP PHASE

DESIGN

INTERIM REVIEW
DOCUMENT INCOMPLETE. NOT INTENDED FOR PERMIT, BIDDING OR CONSTRUCTION.
ENGINEER: TYLER PAYNE DUBE
P.E. SERIAL NO: 118612
DATE: 1/9/2020

APPROVAL

INTERIM REVIEW
DOCUMENT INCOMPLETE. NOT INTENDED FOR PERMIT, BIDDING OR CONSTRUCTION.
ENGINEER: JOHN A. TYLER
P.E. SERIAL NO: 105193
DATE: 1/9/2020

0 10 20 30 60

SCALE: PLAN 1"= 30'

REV. NO.	DATE	DESCRIPTION	BY

PAPE-DAWSON ENGINEERS
SAN ANTONIO | AUSTIN | HOUSTON | FORT WORTH | DALLAS
2000 NW LOOP 410 | SAN ANTONIO, TX 78213 | 210.375.9000
TBPE FIRM REGISTRATION #470 | TBPLS FIRM REGISTRATION #10028800

City of New Braunfels

KLEIN RD PHASE 2

TEMPORARY TRAFFIC SIGNAL LAYOUT PHASE 2 STEP 1

SHEET 1 OF 2

DGN:	STATE	PROJECT NO.	ROADWAY
CHK DGN:	TEXAS	NB 18-026	KLEIN RD
DWG:	COUNTY	CITY	SHEET NO.
CHK DWG:	GUADALUPE	NEW BRAUNFELS	177

Plotted on: 1/9/2020
Design Filename: H:\Projects\510\30\03\Design\Civil\Traffic\5103003_WKleinRd_Temp Traffic Signal Sheets_Ph2A.dgn

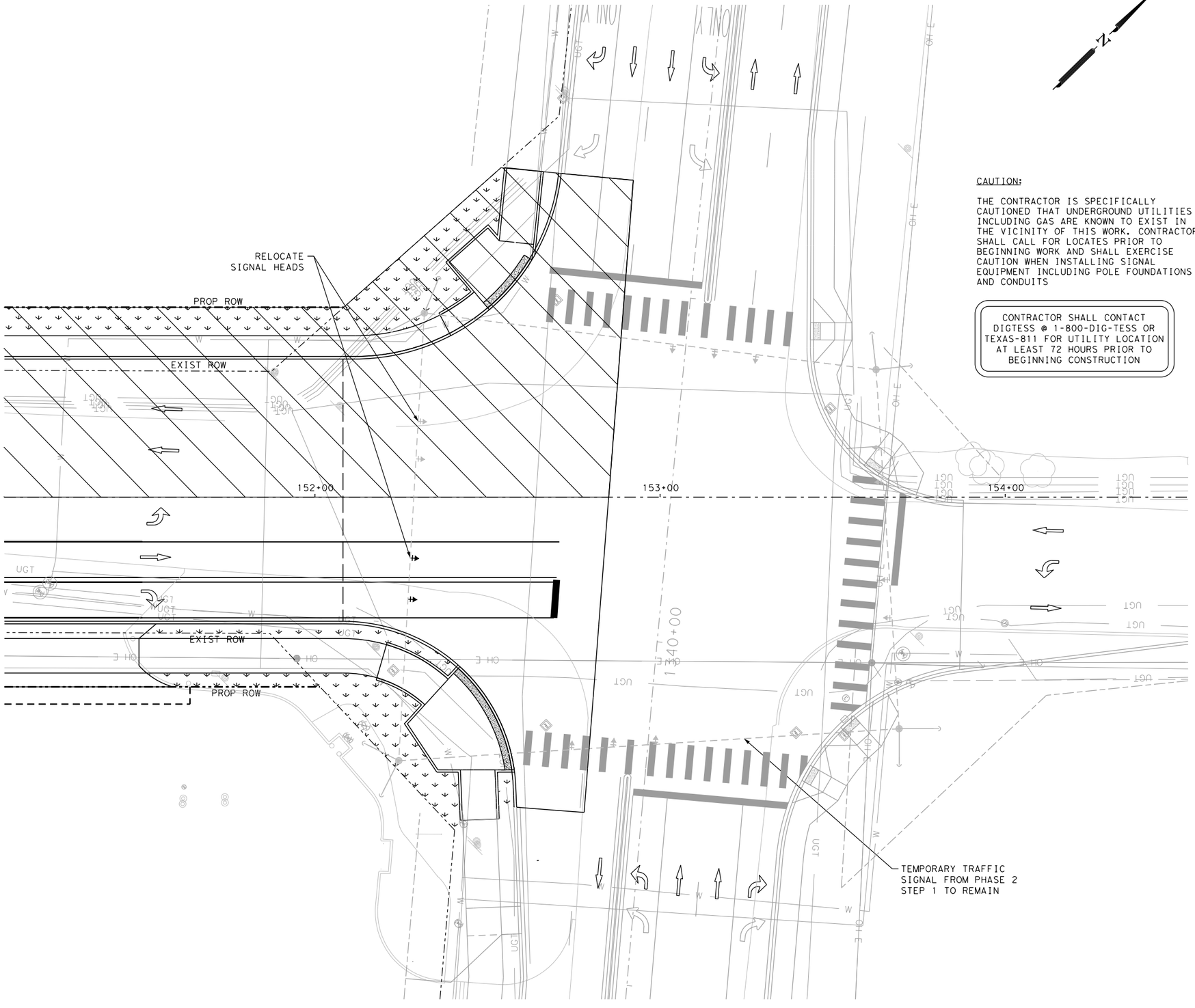

CAUTION:

THE CONTRACTOR IS SPECIFICALLY CAUTIONED THAT UNDERGROUND UTILITIES INCLUDING GAS ARE KNOWN TO EXIST IN THE VICINITY OF THIS WORK. CONTRACTOR SHALL CALL FOR LOCATES PRIOR TO BEGINNING WORK AND SHALL EXERCISE CAUTION WHEN INSTALLING SIGNAL EQUIPMENT INCLUDING POLE FOUNDATIONS AND CONDUITS

CONTRACTOR SHALL CONTACT DIGTESS @ 1-800-DIG-TESS OR TEXAS-811 FOR UTILITY LOCATION AT LEAST 72 HOURS PRIOR TO BEGINNING CONSTRUCTION

LEGEND

- TEMPORARY TRAFFIC SIGNAL POLE
- TRAFFIC SIGNAL SPAN WIRE
- SIGNAL HEAD
- UTILITY POLE
- TEMPORARY GUY ANCHOR
- TCP PHASE

DESIGN

INTERIM REVIEW

DOCUMENT INCOMPLETE. NOT INTENDED FOR PERMIT, BIDDING OR CONSTRUCTION.
ENGINEER: TYLER PAYNE DUBE
P.E. SERIAL NO: 118612
DATE: 1/9/2020

APPROVAL

INTERIM REVIEW

DOCUMENT INCOMPLETE. NOT INTENDED FOR PERMIT, BIDDING OR CONSTRUCTION.
ENGINEER: JOHN A. TYLER
P.E. SERIAL NO: 105193
DATE: 1/9/2020

0 10 20 30 60

SCALE: PLAN 1" = 30'

REV. NO.	DATE	DESCRIPTION	BY

PAPE-DAWSON ENGINEERS
SAN ANTONIO | AUSTIN | HOUSTON | FORT WORTH | DALLAS
2000 NW LOOP 410 | SAN ANTONIO, TX 78213 | 210.375.9000
TBPE FIRM REGISTRATION #470 | TBPLS FIRM REGISTRATION #10028800

City of New Braunfels

KLEIN RD PHASE 2

TEMPORARY TRAFFIC SIGNAL LAYOUT PHASE 2 STEP 2

SHEET 2 OF 2

DGN:	STATE	PROJECT NO.	ROADWAY
CHK DGN:	TEXAS	NB 18-026	KLEIN RD
DWG:	COUNTY	CITY	SHEET NO.
CHK DWG:	GUADALUPE	NEW BRAUNFELS	178

NOTES:

1. ALL DIMENSIONS SHOWN ARE IN FEET UNLESS SPECIFIED OTHERWISE. (ALL EXISTING FEATURES ARE SHOWN SCREENED BACK i.e. FADED).
2. CONTRACTOR TO POTHOLE SIGNAL POLE LOCATIONS NEAR UNDERGROUND UTILITIES PRIOR TO INSTALLING POLE FOUNDATION.
4. BATTERY BACK UP SYSTEM (BBS) COMPLETE SHALL BE INSTALLED PER TXDOT SPECIAL SPECIFICATION 6053.
5. LOCATION OF TRAFFIC SIGNAL POLES, CONTROLLER ASSEMBLIES, AND ELECTRICAL SERVICE SHALL BE VERIFIED AND APPROVED BY THE CITY OF NEW BRAUNFELS PRIOR TO CONSTRUCTION. THE CONTRACTOR SHALL SUPPLY AND INSTALL THE ADDRESS IN PERMANENT NUMBERS AND LETTERS TO THE STREET SIDE OF THE SERVICE ENCLOSURE. SAID ADDRESS SHALL ALSO BE RECORDED AND GIVEN TO THE CITY OF NEW BRAUNFELS INSPECTOR FOR THE CITY'S RECORDS.
6. ALL ILSN SIGNS SHALL BE INSTALLED ON THE ILSN MAST ARM AS DIRECTED BY THE ENGINEER.
7. AN ADDITIONAL 2" SCHEDULE 80 PVC SHALL BE INSTALLED AT EACH POLE FOUNDATION STUBBED OUT 2' FROM THE FACE OF THE FOUNDATION. STUB OUTS SHALL BE APPROPRIATELY CAPPED BELOW GRADE FOR FUTURE USE.
8. SIDEWALK SHALL BE EXTENDED UP TO THE MAST ARM POLES, AS NEEDED, TO PROVIDE PEDESTRIAN ACCESS TO THE PEDESTRIAN PUSH BUTTONS.
9. UTILITIES SHOWN ARE APPROXIMATE. CONTRACTOR SHALL CALL FOR LOCATES PRIOR TO COMMENCING EXCAVATION. ALL UTILITY LOCATIONS SHALL BE VERIFIED IN THE FIELD BY THE CONTRACTOR.
10. NEATLY CAP/COIL ALL WIRES AND CABLES IN GROUND BOX OR AT TERMINATION.
11. SIGNAL OPERATION WILL BE MONITORED AFTER CONSTRUCTION AND MODIFIED AS NECESSARY.
12. ALL SIGNAL HEADS SHALL HAVE BACK PLATES.

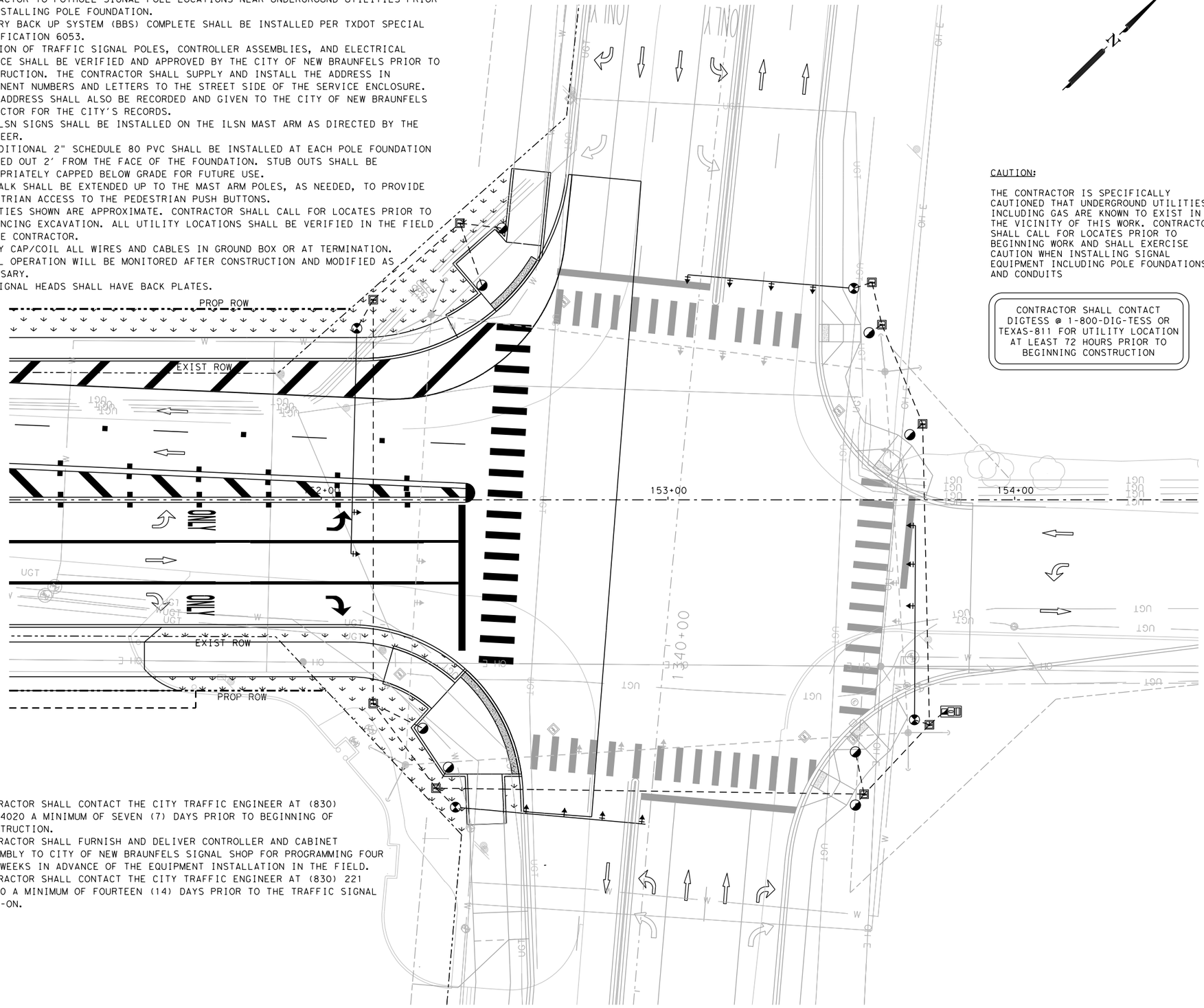

13. CONTRACTOR SHALL CONTACT THE CITY TRAFFIC ENGINEER AT (830) 221-4020 A MINIMUM OF SEVEN (7) DAYS PRIOR TO BEGINNING OF CONSTRUCTION.
14. CONTRACTOR SHALL FURNISH AND DELIVER CONTROLLER AND CABINET ASSEMBLY TO CITY OF NEW BRAUNFELS SIGNAL SHOP FOR PROGRAMMING FOUR (4) WEEKS IN ADVANCE OF THE EQUIPMENT INSTALLATION IN THE FIELD.
15. CONTRACTOR SHALL CONTACT THE CITY TRAFFIC ENGINEER AT (830) 221 -4020 A MINIMUM OF FOURTEEN (14) DAYS PRIOR TO THE TRAFFIC SIGNAL TURN-ON.

CAUTION:

THE CONTRACTOR IS SPECIFICALLY CAUTIONED THAT UNDERGROUND UTILITIES INCLUDING GAS ARE KNOWN TO EXIST IN THE VICINITY OF THIS WORK. CONTRACTOR SHALL CALL FOR LOCATES PRIOR TO BEGINNING WORK AND SHALL EXERCISE CAUTION WHEN INSTALLING SIGNAL EQUIPMENT INCLUDING POLE FOUNDATIONS AND CONDUITS

CONTRACTOR SHALL CONTACT DIGTESS @ 1-800-DIG-TESS OR TEXAS-811 FOR UTILITY LOCATION AT LEAST 72 HOURS PRIOR TO BEGINNING CONSTRUCTION

LEGEND

- PEDESTRIAN PUSH BUTTON
- TRAFFIC SIGNAL POLE
- TEMPORARY TRAFFIC SIGNAL POLE
- TRAFFIC CONTROLLER BOX
- GROUND BOX
- UTILITY POLE
- SIGNAL HEAD
- CONDUIT
- TEMPORARY GUY ANCHOR
- TRAFFIC SIGNAL SPAN WIRE

DESIGN

INTERIM REVIEW

DOCUMENT INCOMPLETE. NOT INTENDED FOR PERMIT, BIDDING OR CONSTRUCTION.
ENGINEER: TYLER PAYNE DUBE
P.E. SERIAL NO: 118612
DATE: 1/9/2020

APPROVAL

INTERIM REVIEW

DOCUMENT INCOMPLETE. NOT INTENDED FOR PERMIT, BIDDING OR CONSTRUCTION.
ENGINEER: JOHN A. TYLER
P.E. SERIAL NO: 105193
DATE: 1/9/2020

0 10 20 30 60

SCALE: PLAN 1" = 30'

REV. NO.	DATE	DESCRIPTION	BY

PAPE-DAWSON ENGINEERS

SAN ANTONIO | AUSTIN | HOUSTON | FORT WORTH | DALLAS
2000 NW LOOP 410 | SAN ANTONIO, TX 78213 | 210.375.9000
TBPE FIRM REGISTRATION #470 | TBPLS FIRM REGISTRATION #10028800

City of New Braunfels

KLEIN RD PHASE 2

PROPOSED TRAFFIC SIGNAL LAYOUT

SHEET 1 OF 1

DGN:	STATE	PROJECT NO.	ROADWAY
CHK DGN:	TEXAS	NB 18-026	KLEIN RD
DWG:	COUNTY	CITY	SHEET NO.
CHK DWG:	GUADALUPE	NEW BRAUNFELS	179

Plotted on: 1/9/2020

Design Filename: H:\Projects\510\30\03\Design\Civil\Traffic\5103003_WKleinRd_PROP Traffic Signal Sheets.dgn

Plotted on: 1/9/2020

Design Filename: H:\Projects\510\30\03\Design\Civil\Traffic\5103003CCS01.dgn

CONDUIT AND CONDUCTOR SCHEDULE

	RUN NUMBER	1	2	2A	3	3A	4		5		6	7		8		9
	CONDUIT SIZE IN INCHES															
	NUMBER OF CONDUITS															
	LENGTH OF RUN (FT)															
	TRENCH (T)/BORE (B)/EXISTING	A	T	T	T	T	B	B	T	T	B	B	B	T	T	T
CABLE	CIRCUIT	NUMBER OF CONDUCTORS														
#6 XHHW (SOLID)	120 POWER HOT	CABLES PULLED BY CPS														
#6 BARE (SOLID)	120 POWER COMMON															
#8 BARE (SOLID)	BARE BOND GROUND															
7 COND. #12 AWG TYPE "A", SOLID	SIGNALS															
4 COND. #14 AWG TYPE "A", SOLID	ILSN SIGNS															
3 COND. #12 AWG TRAY CABLE	LUMINAIRE															
VIDS COAX. & 3 COND, #16 AWG POWER CABLE	VIVDS															

ELECTRICAL SERVICE DATA

Electrical Service Description (see ED (4) - 03)	Service Conduit	Service Conductors No./Si	Safety Switch	Main Ckt. Bkr. Pole/A	Two-Pole Contactor	Panelbd / Loadcenter	Circuit No.	Branch Ckt. Bkr. Pole/A	Branch Circuit	KVA Load
ELEC SERV TY D (120/240)100(NS)AL(E)PS(U)										

EXISTING POLE & EQUIPMENT INFORMATION

ID	DESCRIPTION/ATTACHMENTS

SIGNS SHALL BE ATTACHED TO POLES AND MAST ARMS AS SHOWN ON PLANS.

POLE & EQUIPMENT INFORMATION

ID	DESCRIPTION/ATTACHMENTS	NORTHING	EASTING	FND. ELEV
A				
B				
C				
D				
E				
F				
G				

POLE SCHEDULE

	POLE	C	D	E	F	G
	POLE TYPE	DMA	PED	PED	SMA	PED
	POLE HEIGHT (FEET)					
	MAST ARM LENGTH (FEET)					
	ILSN					
	ILSN ARM LENGTH (FEET)					
	LUMINARE (YES/NO)					
	FOUNDATION TYPE					
	FOUNDATION DEPTH (FEET)					
CABLE	CIRCUIT	NUMBER OF CONDUCTORS				
#8 BARE (SOLID)	BARE BOND GROUND					
7 COND. #12 AWG TYPE "A", SOLID	SIGNALS					
4 COND. #12 AWG TYPE "A", STRANDED	PED. SIGNALS					
2 COND. #14 AWG TYPE "C",	PED. PUSH BUTTONS					
EMERG PREEMPT	M138 OPTICOM					
4 COND. #14 AWG TYPE "A", SOLID	ILSN SIGNS					
3 COND. #12 AWG	LUMINAIRE					
7 COND. #12 AWG TYPE "A", SOLID	COMMUNICATION					
CCTV CABLE						
VIDS COAX. & 3 COND, #16 AWG POWER CABLE	VIVDS					
POWER & DATA CABLE	RADD					

DESIGN

INTERIM REVIEW

DOCUMENT INCOMPLETE. NOT INTENDED FOR PERMIT, BIDDING OR CONSTRUCTION.
ENGINEER: TYLER PAYNE DUBE
P.E. SERIAL NO: 118612
DATE: 1/9/2020

APPROVAL

INTERIM REVIEW

DOCUMENT INCOMPLETE. NOT INTENDED FOR PERMIT, BIDDING OR CONSTRUCTION.
ENGINEER: JOHN A. TYLER
P.E. SERIAL NO: 105193
DATE: 1/9/2020

0 10 20 30 60

SCALE: PLAN 1" = 30'

REV. NO.	DATE	DESCRIPTION	BY

PAPE-DAWSON ENGINEERS
SAN ANTONIO | AUSTIN | HOUSTON | FORT WORTH | DALLAS
2000 NW LOOP 410 | SAN ANTONIO, TX 78213 | 210.375.9000
TBPE FIRM REGISTRATION #470 | TBPLS FIRM REGISTRATION #10028800

City of New Braunfels

KLEIN RD PHASE 2

CONDUIT & CONDUCTOR SCHEDULE

SHEET 1 OF 1

DGN:	STATE	PROJECT NO.	ROADWAY
CHK DGN:	TEXAS	NB 18-026	KLEIN RD
DWG:	COUNTY	CITY	SHEET NO.
CHK DWG:	GUADALUPE	NEW BRAUNFELS	180

DISCLAIMER:
The use of this standard is governed by the "Texas Engineering Practice Act". No warranty of any kind is made by TxDOT for any purpose whatsoever. TxDOT assumes no responsibility for the conversion of this standard to other formats or for incorrect results or damages resulting from its use.

DATE: 1/9/2020 3:46:01 PM
FILE: H:\projects\510\30\03\Design\Civil\Standards\PavementMarkers\pm1-12.dgn

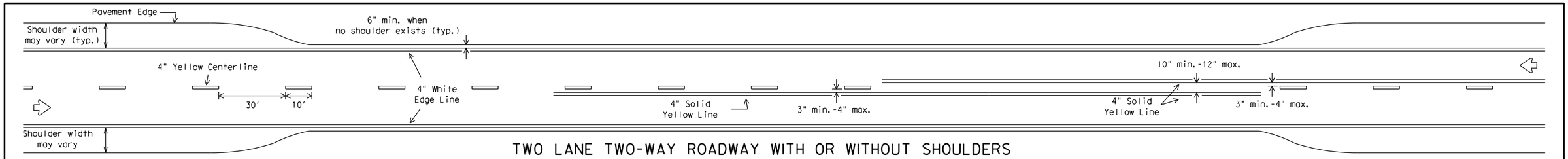

TWO LANE TWO-WAY ROADWAY WITH OR WITHOUT SHOULDERS

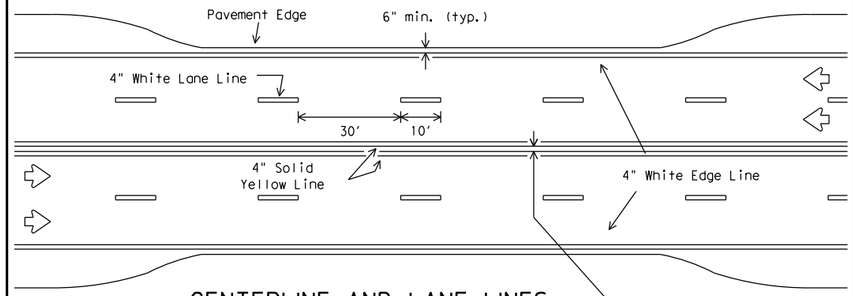

CENTERLINE AND LANE LINES FOUR LANE TWO-WAY ROADWAY WITH OR WITHOUT SHOULDERS

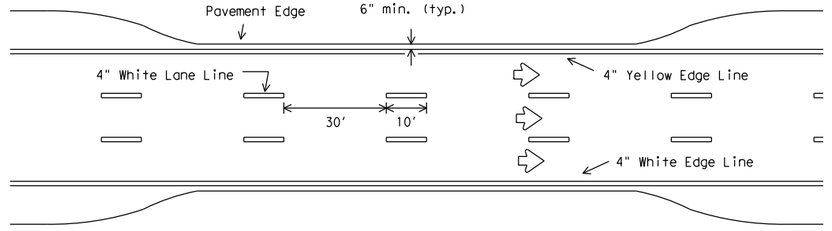

EDGE LINE AND LANE LINES ONE-WAY ROADWAY WITH OR WITHOUT SHOULDERS

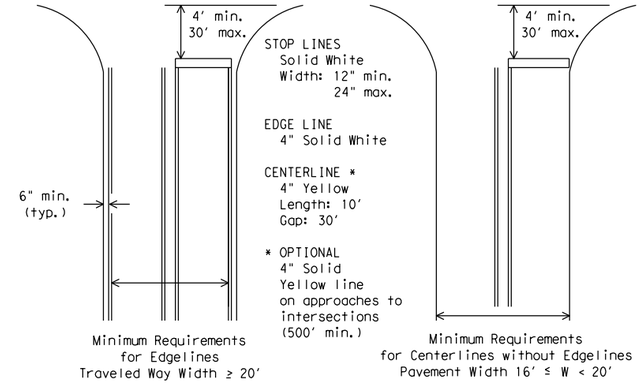

GUIDE FOR PLACEMENT OF STOP LINES, EDGE LINE & CENTERLINE

Based on Traveled Way and Pavement Widths for Undivided Highways

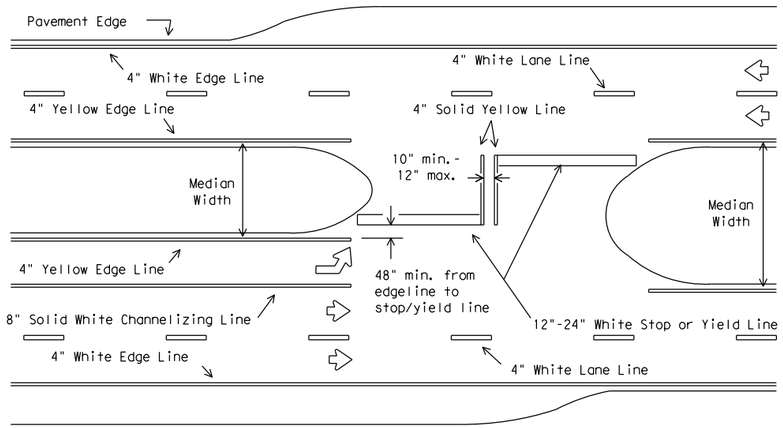

All medians shall be field measured to determine the location of necessary striping. Stop/Yield bars and centerlines shall be placed when the median width is greater than 30 ft. The median width is defined as the area between two roadways of a divided highway measured from edge of traveled way to edge of traveled way. The median excludes turn lanes. The median width might be different between intersections, interchanges and of opposite approaches of the same intersection. The narrow median width will be the controlling width to determine if markings are required.

FOUR LANE DIVIDED ROADWAY INTERSECTIONS

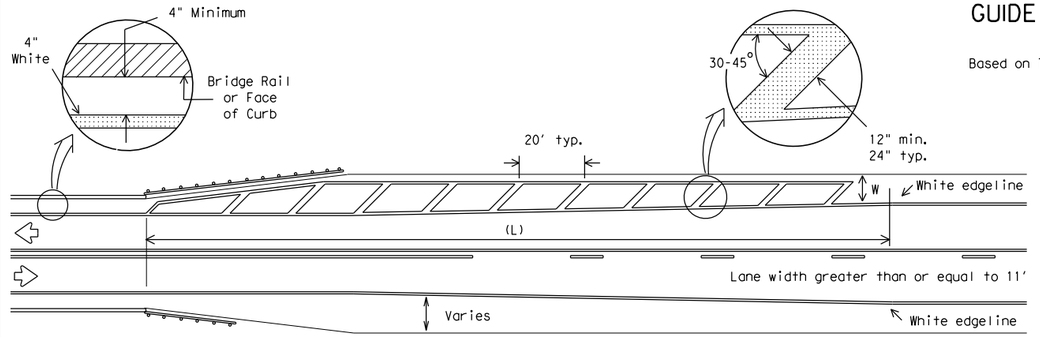

NOTES:

1. No-passing zone on bridge approach is optional but if used, it shall be a minimum 500 feet long.
2. For crosshatching length (L) see Table 1.
3. The width of the offset (W) and the required crosshatching width is the full shoulder width in advance of the bridge.
4. The crosshatching is not required if delineators or barrier reflectors are used along the structure.
5. For guard fence details, refer elsewhere in the plans.

ROADWAYS WITH REDUCED SHOULDER WIDTHS ACROSS BRIDGE OR CULVERT

TABLE 1 - TYPICAL LENGTH (L)

Posted Speed *	Formula
≤ 40	$L = \frac{WS^2}{60}$
≥ 45	L=WS

* 85th Percentile Speed may be used on roads where traffic speeds normally exceed the posted speed limit. Crosshatching length should be rounded up to nearest 5 foot increment.

L=Length of Crosshatching (FT.) W=Width of Offset (FT.)
S=Posted Speed (MPH)

EXAMPLES:

An 8 foot shoulder in advance of a bridge reduces to 4 feet on a 70 MPH roadway. The length of the cross-hatching should be:

$L = 8 \times 70 = 560$ ft.

A 4 foot shoulder in advance of a bridge reduces to 2 feet on a 40 MPH roadway. The length of the cross-hatching should be:

$L = 4(40)^2 / 60 = 106.67$ ft. rounded to 110 ft.

GENERAL NOTES

1. Edgeline striping shall be as shown in the plans or as directed by the Engineer. The edgeline should typically be placed a minimum of 6 inches from the edge of pavement. This distance may vary due to pavement raveling or other conditions. Edgelines are not required in curb and gutter sections of roadways.
2. The traveled way includes only that portion of the roadway used for vehicular travel and not the parking lanes, sidewalks, berms and shoulders. The traveled ways shall be measured from the inside of edgeline to inside of edgeline of a two lane roadway.

MATERIAL SPECIFICATIONS	
PAVEMENT MARKERS (REFLECTORIZED)	DMS-4200
EPOXY AND ADHESIVES	DMS-6100
BITUMINOUS ADHESIVE FOR PAVEMENT MARKERS	DMS-6130
TRAFFIC PAINT	DMS-8200
HOT APPLIED THERMOPLASTIC	DMS-8220
PERMANENT PREFABRICATED PAVEMENT MARKINGS	DMS-8240

All pavement marking materials shall meet the required Departmental Material Specifications as specified by the plans.

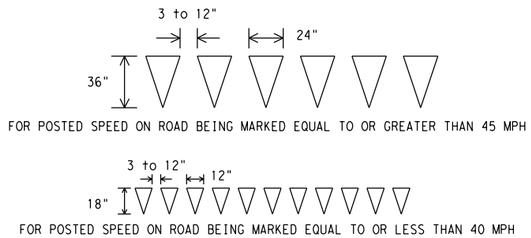

YIELD LINES

Texas Department of Transportation
Traffic Operations Division

TYPICAL STANDARD PAVEMENT MARKINGS

PM(1)-12

© TxDOT November 1978

DN: TXDOT	CK: TXDOT	DW: TXDOT	CK: TXDOT

REVISIONS	CONT	SECT	JOB	HIGHWAY
8-95 2-12				KLEIN RD
5-00	DIST	COUNTY		SHEET NO.
8-00	SAT	GUADALUPE		181
3-03				

22A

DISCLAIMER: The use of this standard is governed by the "Texas Engineering Practice Act". No warranty of any kind is made by TxDOT for any purpose whatsoever. TxDOT assumes no responsibility for the conversion of this standard to other formats or for incorrect results or damages resulting from its use.

DATE: 1/9/2020 3:46:03 PM
FILE: H:\Projects\510\30\03\Design\Civil\Standards\PavementMarkers\pm2-12.dgn

REFLECTIVE RAISED PAVEMENT MARKERS FOR VEHICLE POSITIONING GUIDANCE

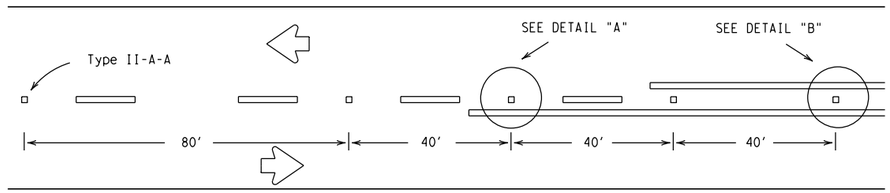

CENTERLINE FOR ALL TWO LANE ROADWAYS

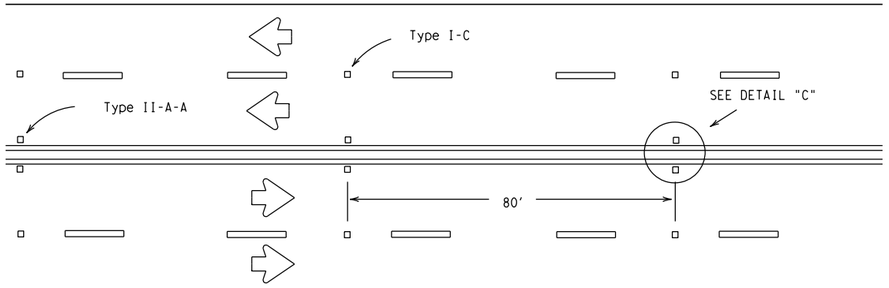

CENTERLINE & LANE LINES FOR FOUR LANE TWO-WAY HIGHWAYS

Raised pavement marker Type I-C, clear face toward normal traffic, shall be placed on 80-foot centers.

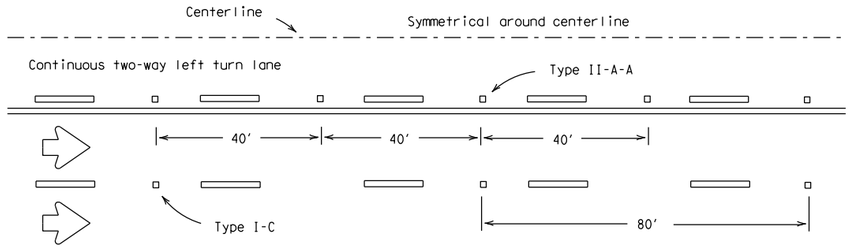

CENTERLINE AND LANE LINES FOR TWO-WAY LEFT TURN LANE

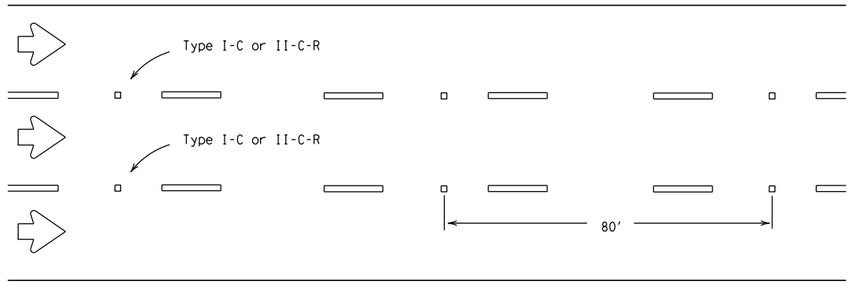

LANE LINES FOR ONE-WAY ROADWAY (NON-FREEWAY FACILITIES)

Raised pavement markers Type II-C-R shall have clear face toward normal traffic and red face toward wrong-way traffic.

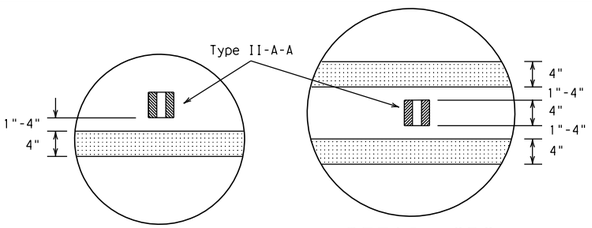

DETAIL "A"

DETAIL "B"

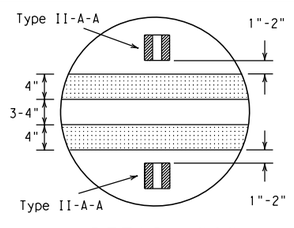

DETAIL "C"

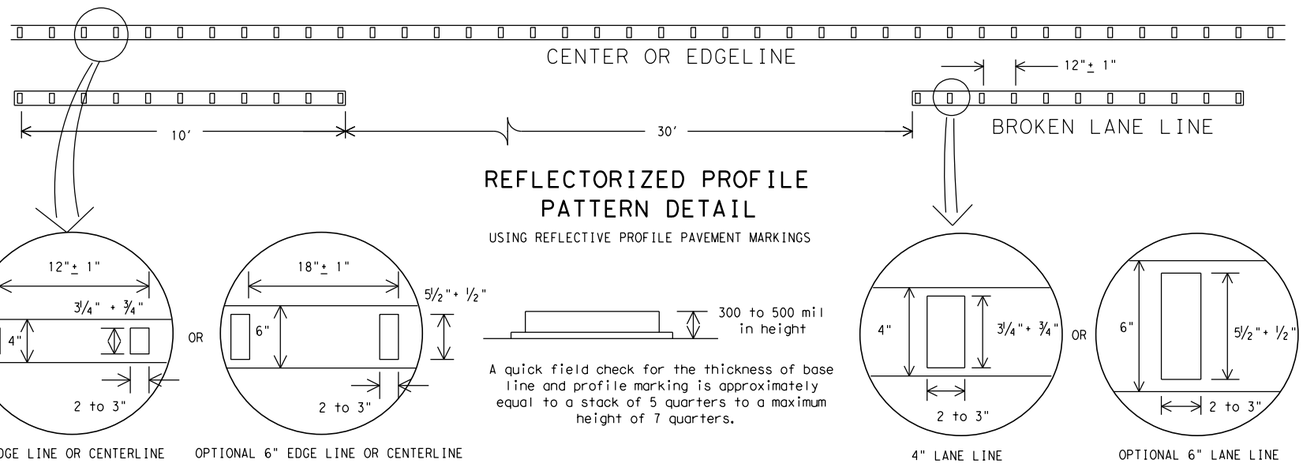

REFLECTORIZED PROFILE PATTERN DETAIL

USING REFLECTIVE PROFILE PAVEMENT MARKINGS

A quick field check for the thickness of base line and profile marking is approximately equal to a stack of 5 quarters to a maximum height of 7 quarters.

NOTE:
Profile markings shall not be placed on roadways with a posted speed limit of 45 MPH or less.

GENERAL NOTES

1. All raised pavement markers placed in broken lines shall be placed in line with and midway between the stripes.
2. On concrete pavements the raised pavement markers should be placed to one side of the longitudinal joints.

MATERIAL SPECIFICATIONS	
PAVEMENT MARKERS (REFLECTORIZED)	DMS-4200
EPOXY AND ADHESIVES	DMS-6100
BITUMINOUS ADHESIVE FOR PAVEMENT MARKERS	DMS-6130
TRAFFIC PAINT	DMS-8200
HOT APPLIED THERMOPLASTIC	DMS-8220
PERMANENT PREFABRICATED PAVEMENT MARKINGS	DMS-8240

All pavement marking materials shall meet the required Departmental Material Specifications as specified by the plans.

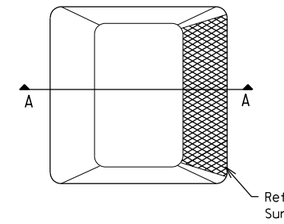

Type I (Top View)

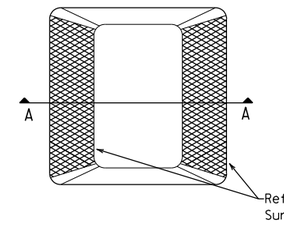

Type II (Top View)

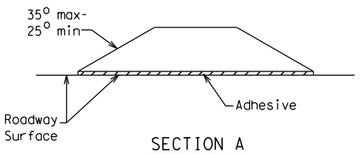

SECTION A

RAISED PAVEMENT MARKERS

Texas Department of Transportation
Traffic Operations Division

POSITION GUIDANCE USING RAISED MARKERS

REFLECTORIZED PROFILE MARKINGS

PM(2)-12

© TxDOT April 1977

REVISIONS
4-92 2-10
5-00 2-12
8-00
2-08

DN: TXDOT	CK: TXDOT	DW: TXDOT	CK: TXDOT
CONT	SECT	JOB	HIGHWAY
			KLEIN RD
DIST	COUNTY		SHEET NO.
SAT	GUADALUPE		182

DISCLAIMER: The use of this standard is governed by the "Texas Engineering Practice Act". No warranty of any kind is made by TxDOT for any purpose whatsoever. TxDOT assumes no responsibility for the conversion of this standard to other formats or for incorrect results or damages resulting from its use.

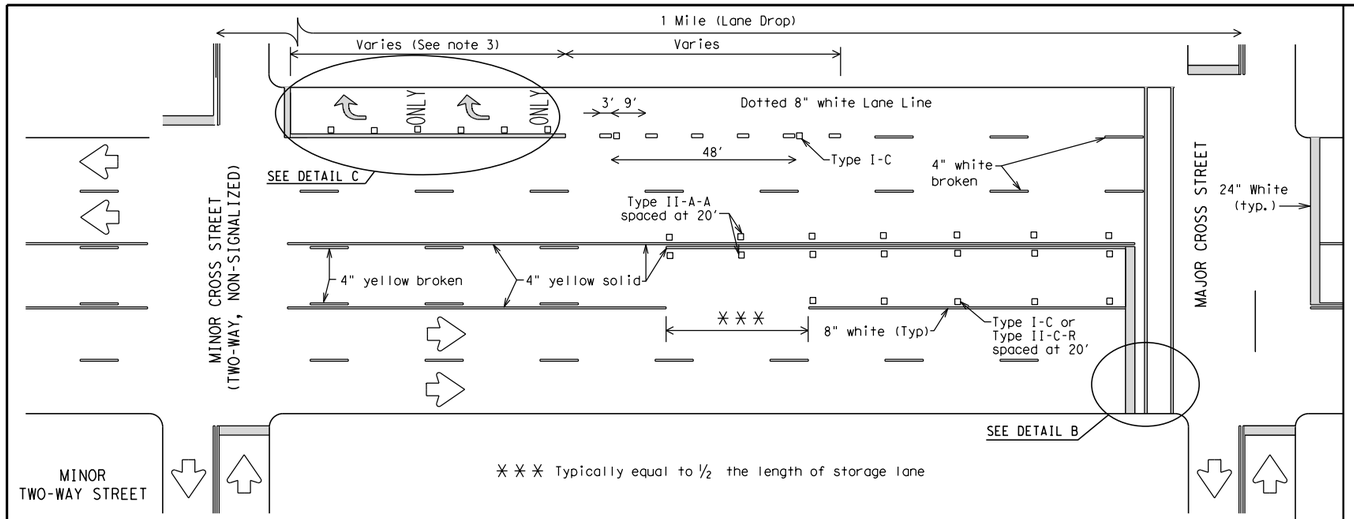

TYPICAL TWLTL AT TWO-WAY CROSS STREET AND RIGHT TURN LANE DROP

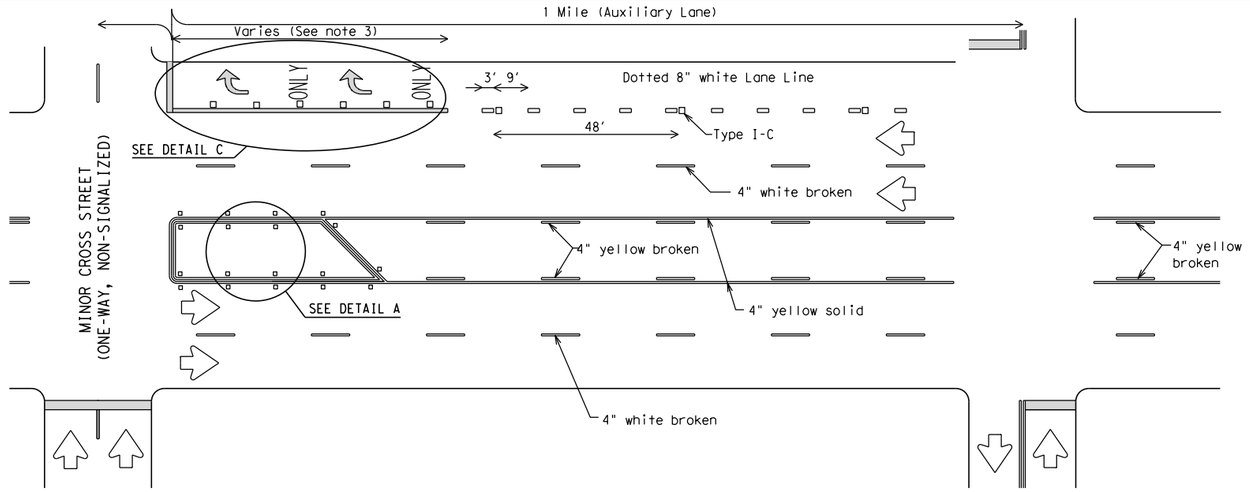

TYPICAL TWLTL AT ONE-WAY STREET AND RIGHT TURN AUXILIARY LANE

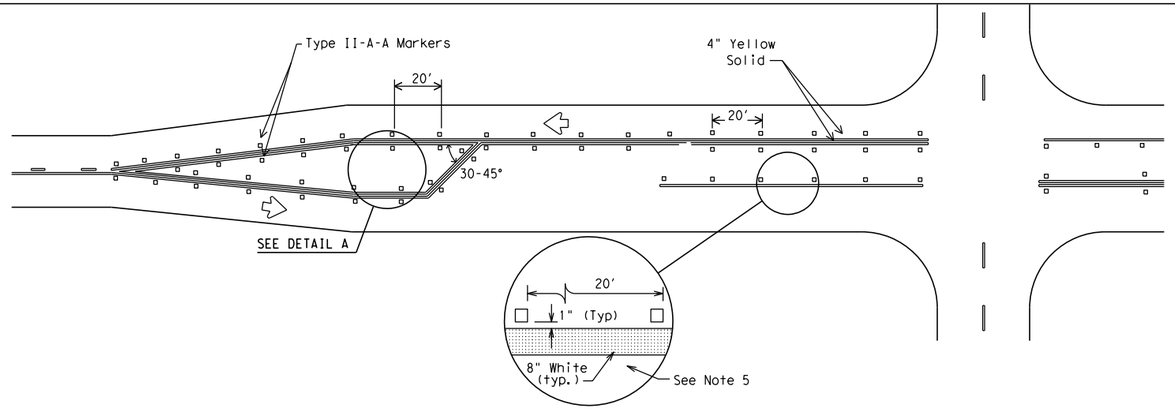

TYPICAL TWO-LANE HIGHWAY INTERSECTION WITH LEFT TURN BAYS

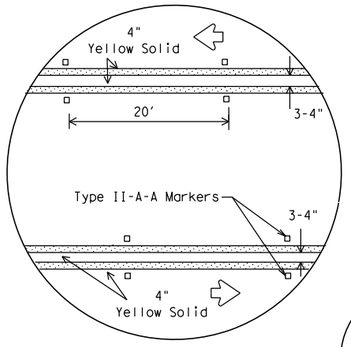

DETAIL A

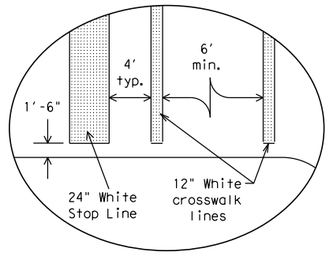

Final placement of Stop Bar and Crosswalk shall be approved by the Engineer in the field.

DETAIL B

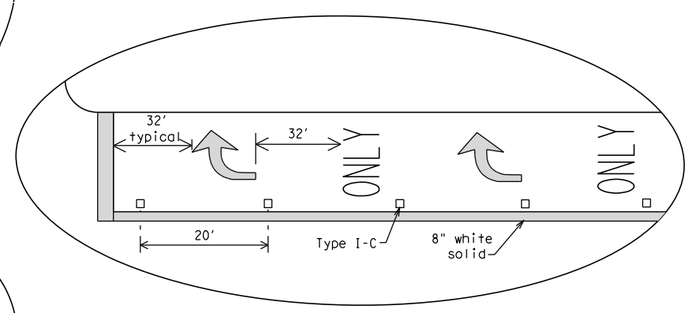

DETAIL C

MATERIAL SPECIFICATIONS	
PAVEMENT MARKERS (REFLECTORIZED)	DMS-4200
EPOXY AND ADHESIVES	DMS-6100
BITUMINOUS ADHESIVE FOR PAVEMENT MARKERS	DMS-6130
TRAFFIC PAINT	DMS-8200
HOT APPLIED THERMOPLASTIC	DMS-8220
PERMANENT PREFABRICATED PAVEMENT MARKINGS	DMS-8240

All pavement marking materials shall meet the required Departmental Material Specifications as specified by the plans.

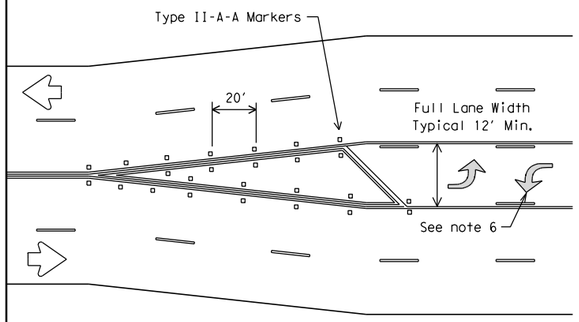

TYPICAL TRANSITION FOR TWLTL AND DIVIDED HIGHWAY

GENERAL NOTES

1. Refer elsewhere in plans for additional RPM placement and details.
2. Lane use word and arrow markings shall be used where through lanes approaching an intersection become mandatory turn lanes. Lane use word and arrow markings should be used in auxiliary lanes of substantial length. Lane use arrow markings or word and arrow markings may be used in other lanes and turn bays for emphasis. Details for words and arrows as shown in the Standard Highway Sign Designs for Texas.
3. When lane used word and arrow markings are used, two sets of arrows should be used if the length of the bay is greater than 180 feet. When a single lane use arrow or word and arrow marking is used for a short turn lane, it should be located at or near the upstream end of the full-width turn lane.
4. Other crosswalk patterns as shown in the "Texas Manual on Uniform Traffic Control Devices" may be used.
5. Raised pavement marker Type I-C with undivided highways, flush medians and two way left turn lanes. Raised pavement marker Type II-C-R with divided highways and raised medians.
6. A two-way left-turn (TWLT) lane-use arrow pavement marking should be used at or just downstream from the beginning of a two-way left-turn lane within a corridor. Repeating the marking after each intersection or dedicated turn bay is not required unless stated elsewhere in the plans.

Texas Department of Transportation
Traffic Operations Division

PAVEMENT MARKINGS FOR TWO-WAY LEFT TURN LANES DIVIDED HIGHWAYS AND RURAL LEFT TURN BAYS

PM(3)-12

© TxDOT April 1998

DN: TXDOT	CK: TXDOT	DW: TXDOT	CK: TXDOT

REVISIONS
5-00 2-12
8-00
3-03
2-10

CONT	SECT	JOB	HIGHWAY
			KLEIN RD
DIST	COUNTY		SHEET NO.
SAT	GUADALUPE		183

22C

DATE: 1/9/2020 3:46:04 PM
FILE: H:\projects\510\30\03\Design\Civil\Standards\PavementMarkers\pm3-12.dgn

DISCLAIMER:
The use of this standard is governed by the "Texas Engineering Practice Act". No warranty of any kind is made by TxDOT for any purpose whatsoever. TxDOT assumes no responsibility for the conversion of this standard to other formats or for incorrect results or damages resulting from its use.

DATE: 1/9/2020 3:46:07 PM
FILE: H:\projects\510\30\03\Design\Civil\Standards\PavementMarkers\blpm-10.dgn

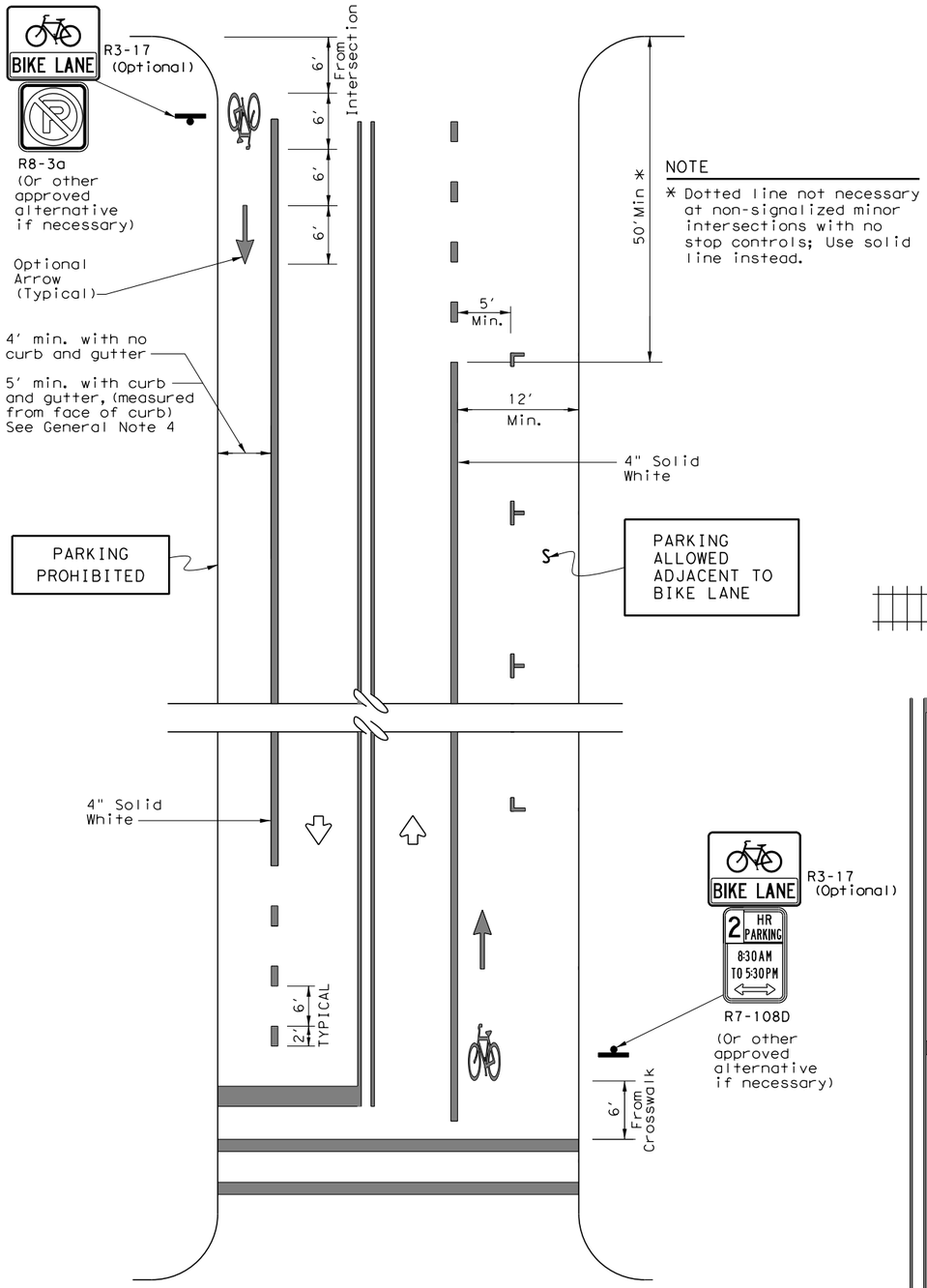

NOTE

* Dotted line not necessary at non-signalized minor intersections with no stop controls; Use solid line instead.

NOTES

1. Bicycle lane pavement markings typically repeated after each intersection or signalized driveway.
2. On uninterrupted sections of roadway, bicycle lane pavement markings typically repeated as follows:

   -1200' for 45 MPH or less roads
   -2500' for 50 MPH and greater roads.

TWO-WAY STREET

(See RCPM Standard for travel lane details)

RAILROAD CROSSING APPROACH

RIGHT TURN ONLY LANE

DETAIL "A"

LEGEND	
	Sign
	Traffic Flow

SPECIFICATION REFERENCE TABLE	
Traffic Paint	DMS-8200
Hot Applied Thermoplastic	DMS-8220
Permanent Prefabricated Pavement Markings	DMS-8240
Glass Traffic Beads	DMS-8290

GENERAL NOTES

1. All bicycle lane pavement markings shall be white unless otherwise noted.
2. All pavement marking materials shall meet the required Department Material Specifications as specified by the plans.
3. Exact sign placement and details are shown elsewhere in the plans.
4. The current edition of AASHTO'S Guide for the Development of Bicycle Facilities should be referenced for variations in design, other geometric conditions, and lane width options.
5. Other bicycle lane symbol or word markings as shown in the Texas Manual on Uniform Traffic Control Devices may be used. Details for words, arrows and symbols as shown in the Standard Highway Sign Designs for Texas.
6. The "BIKE LANE" (R3-17) sign with the "AHEAD" (R3-17a) sign mounted directly below should be installed in advance of the beginning of a marked bike lane.
7. The "BIKE LANE" (R3-17) sign with the "END" (R3-17b) sign mounted directly below should be installed at the end of marked bicycle lane.

Texas Department of Transportation
Traffic Operations Division

BICYCLE LANE PAVEMENT MARKINGS

BLPM-10

© TxDOT May 2010
REVISIONS

DN: TXDOT	CK: TXDOT	DW: TXDOT	CK: TXDOT
CONT	SECT	JOB	HIGHWAY
			KLEIN RD
DIST	COUNTY		SHEET NO.
SAT	GUADALUPE		184

DISCLAIMER: The use of this standard is governed by the "Texas Engineering Practice Act". No warranty of any kind is made by TxDOT for any purpose whatsoever. TxDOT assumes no responsibility for the conversion of this standard to other formats or for incorrect results or damages resulting from its use.

SIGN SUPPORT DESCRIPTIVE CODES

(Descriptive Codes correspond to project estimate and quantities sheets)

SM RD SGN ASSM TY XXXXX(X)XX(X-XXXX)

Post Type

FRP = Fiberglass Reinforced Plastic Pipe (see SMD(FRP))
TWT = Thin-Walled Tubing (see SMD(TWT))
10BWG = 10 BWG Tubing (see SMD(SLIP-1) to (SLIP-3))
S80 = Schedule 80 Pipe (see SMD(SLIP-1) to (SLIP-3))

Number of Posts (1 or 2)

Anchor Type

UA = Universal Anchor - Concreted (see SMD(FRP) and (TWT))
UB = Universal Anchor - Bolted down (see SMD(FRP) and (TWT))
WS = Wedge Anchor Steel - (see SMD(TWT))
WP = Wedge Anchor Plastic (see SMD(TWT))
SA = Slipbase - Concreted (see SMD(SLIP-1) to (SLIP-3))
SB = Slipbase - Bolted Down (see SMD(SLIP-1) to (SLIP-3))

Sign Mounting Designation

P = Prefab. "Plain" (see SMD(SLIP-1) to (SLIP-3), (TWT), (FRP))
T = Prefab. "T" (see SMD(SLIP-1) to (SLIP-3), (TWT))
U = Prefab. "U" (see SMD(SLIP-1) to (SLIP-3))
IF REQUIRED
1EXT or 2EXT = Number of Extensions (see SMD(SLIP-1) to (SLIP-3), (TWT))
BM = Extruded Wind Beam (see SMD(SLIP-1) to (SLIP-3))
WC = 1.12 #/ft Wing Channel (see SMD(SLIP-1) to (SLIP-3))
EXAL = Extruded Aluminum Sign Panels (see SMD(SLIP-1))

REQUIRED CLEARANCE FOR BREAKAWAY SUPPORT

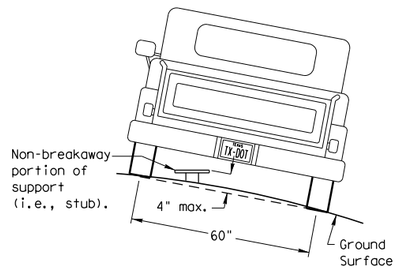

To avoid vehicle undercarriage snagging, any substantial remains of a breakaway support, when it is broken away, should not project more than 4 inches above a 60-inch chord (i.e., typical space between wheel paths).

No more than 2 sign posts should be located within a 7 ft. circle.

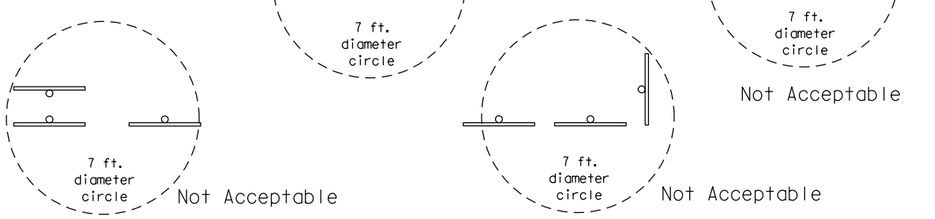

SIGN LOCATION

PAVED SHOULDERS

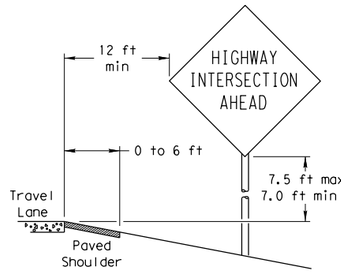

LESS THAN 6 FT. WIDE

When the shoulder is 6 ft. or less in width, the sign must be placed at least 12 ft. from the edge of the travel lane.

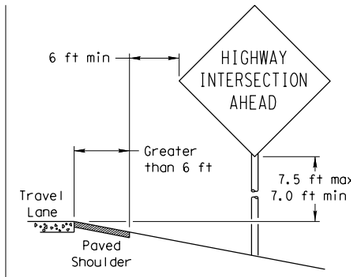

GREATER THAN 6 FT. WIDE

When the shoulder is greater than 6 ft in width, the sign must be placed at least 6 ft. from the edge of the shoulder.

BEHIND BARRIER

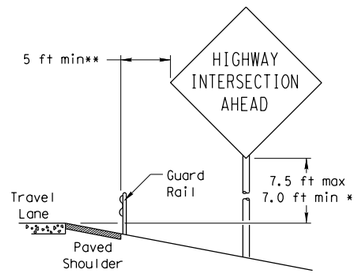

BEHIND GUARDRAIL

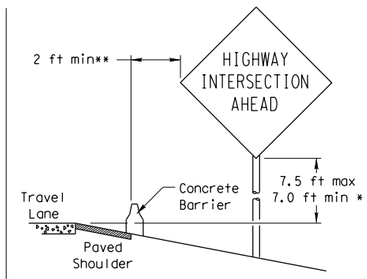

BEHIND CONCRETE BARRIER

**Sign clearance based on distance required for proper guard rail or concrete barrier performance.

T-INTERSECTION

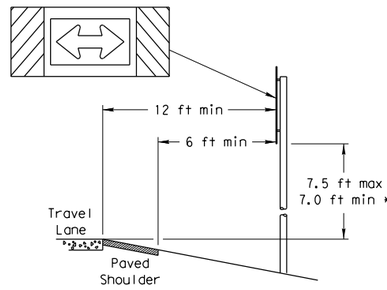

When this sign is needed at the end of a two-lane, two way roadway, the right edge of the sign should be in line with the centerline of the roadway. Place as close to ROW as practical.

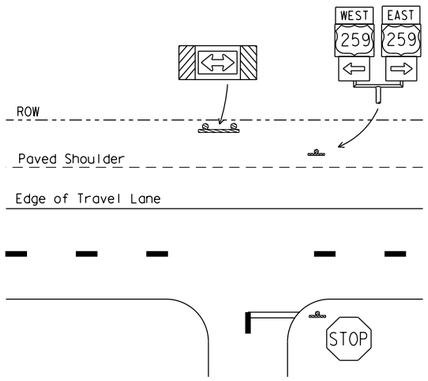

* Signs shall be mounted using the following condition that results in the greatest sign elevation:

(1) a minimum of 7 to a maximum of 7.5 feet above the edge of the travel lane or

(2) a minimum of 7 to a maximum of 7.5 feet above the grade at the base of the support when sign is installed on the backslope.

The maximum values may be increased when directed by the Engineer.

See the Traffic Operations Division website for detailed drawings of sign clamps, Triangular Slipbase System components and Wedge Anchor System components.

The website address is:
http://www.txdot.gov/publications/traffic.htm

TYPICAL SIGN ATTACHMENT DETAIL

Single Signs

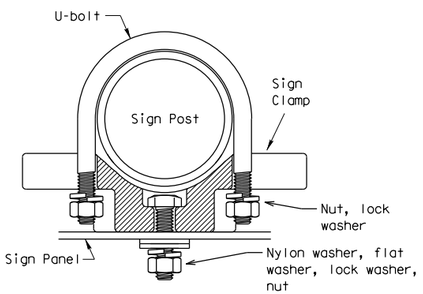

Back-to-Back Signs

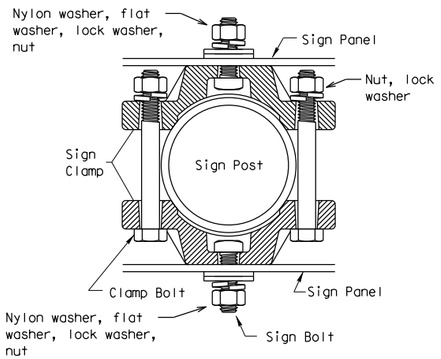

Bolts used to mount sign panels to the clamp are 5/16-18 UNC galvanized square head with nut, nylon washer, flat washer and lock washer. The bolt length is 1 inch for aluminum.

When two sign clamps are used to mount signs back-to-back, use a 5/16-18 UNC galvanized hex head per ASTM A307 with nut and helical-spring lock washer. The approximate bolt lengths for various post sizes and sign clamp types are given in the table at right. The bolt length may need to be adjusted depending upon field conditions.

Sign clamps may be either the specific size clamp or the universal clamp.

Pipe Diameter	Approximate Bolt Length	
	Specific Clamp	Universal Clamp
2" nominal	3"	3 or 3 1/2"
2 1/2" nominal	3 or 3 1/2"	3 1/2 or 4"
3" nominal	3 1/2 or 4"	4 1/2"

SIGNS WITH PLAQUES

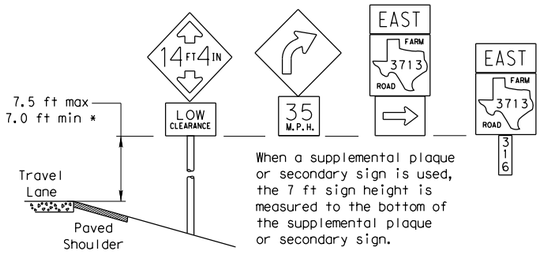

When a supplemental plaque or secondary sign is used, the 7 ft sign height is measured to the bottom of the supplemental plaque or secondary sign.

CURB & GUTTER OR RAISED ISLAND

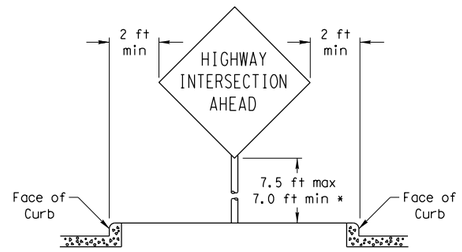

RESTRICTED RIGHT-OF-WAY

(When 6 ft min. is not possible.)

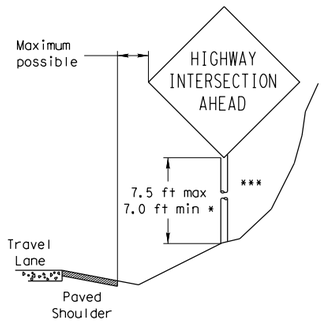

Right-of-way restrictions may be created by rocks, water, vegetation, forest, buildings, a narrow island, or other factors.

In situations where a lateral restriction prevents the minimum horizontal clearance from the edge of the travel lane, signs should be placed as far from the travel lane as practical.

*** Post may be shorter if protected by guardrail or if Engineer determines the post could not be hit due to extreme slope.

Texas Department of Transportation
Traffic Operations Division

SIGN MOUNTING DETAILS SMALL ROADSIDE SIGNS GENERAL NOTES & DETAILS

SMD(GEN)-08

©TxDOT July 2002

DN: TXDOT	CK: TXDOT	DW: TXDOT	CK: TXDOT

CONT	SECT	JOB	HIGHWAY
9-08 REVISIONS			KLEIN RD
DIST	COUNTY		SHEET NO.
SAT	GUADALUPE		185

26A

DATE: 1/9/2020 3:46:09 PM
FILE: H:\projects\510\30\03\Design\Civil\Standards\Signing\smdgen.dgn

DISCLAIMER:
The use of this standard is governed by the "Texas Engineering Practice Act". No warranty of any kind is made by TxDOT for any purpose whatsoever. TxDOT assumes no responsibility for the conversion of this standard to other formats or for incorrect results or damages resulting from its use.

Wedge Anchor Steel System

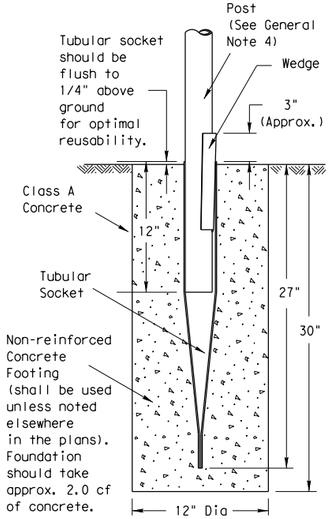

SM RD SGN ASSM TY TWT(X)WS(X)

Wedge Anchor High Density Polyethylene (HDPE) System

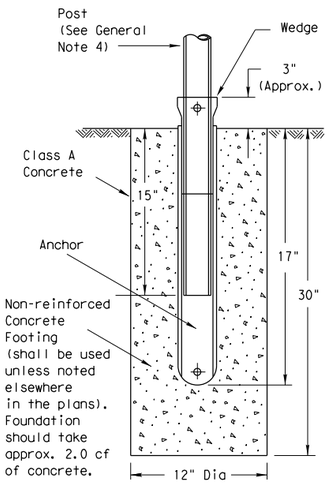

SMD RD SGN ASSM TY TWT(X)WP(X)

Universal Anchor System with Thin-Walled Tubing Post

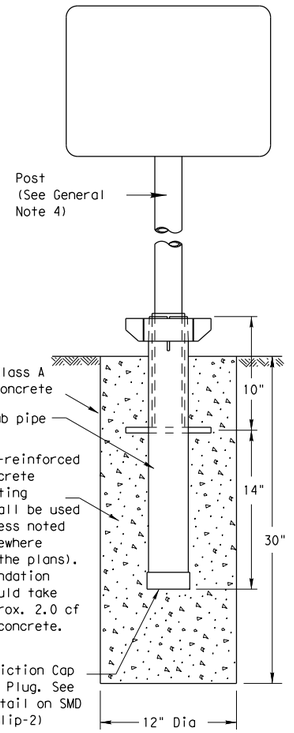

SM RD SGN ASSM TY TWT(X)UA(P)

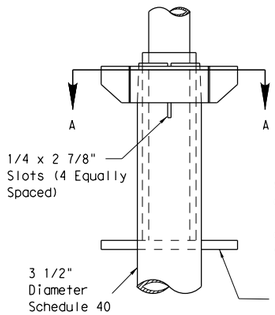

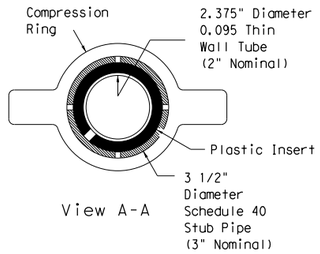

View A-A

Plastic insert must be used when using the TWT with either the Universal Anchor System or the Bolt Down Universal Anchor System. The insert should be approx. 10" long and cover the tubing from just above the top of the stub pipe to the bottom of the sign post when using the Universal Anchor System. The insert should be cut to approx. 4 1/2" when used with the Bolt Down Universal Anchor System.

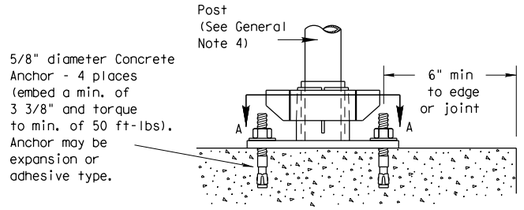

Concrete anchor consists of 5/8" diameter stud bolt with UNC series bolt threads on the upper end. A heavy hex nut per ASTM A563 and hardened washer per ASTM F436. The stud bolt shall have minimum yield and ultimate tensile strengths of 50 and 75 ksi, respectively. Nuts, bolts and washers shall be galvanized per Item 445, "Galvanizing." Top of bolt shall extend at least flush with top of nut when installed. The anchor, when installed in 4000 psi normal-weight concrete with a 3 3/8" minimum embedment, shall have a minimum allowable tension and shear of 2450 and 1525 psi, respectively. Adhesive type anchors shall have stud bolts installed with Type III epoxy per DMS-6100, "Epoxies and Adhesives." Adhesive anchors may be loaded after adequate epoxy cure time per the manufacturer's recommendations.

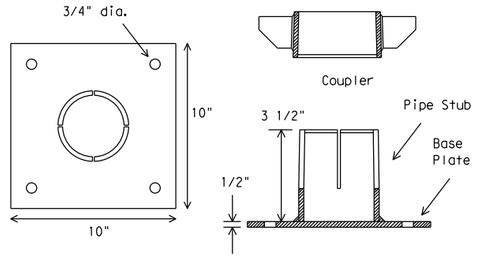

SM RD SGN ASSM TY TWT(X)UB(P)

Sign Installation Using a Prefabricated T-Bracket for Thin-Wall Tubing Post

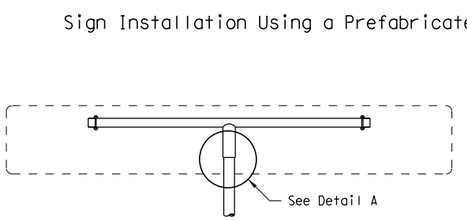

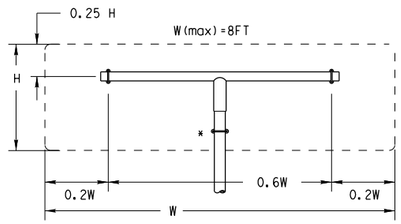

SM RD SGN ASSM TY TWT(X)XX(T)

(* - See General Note 6)

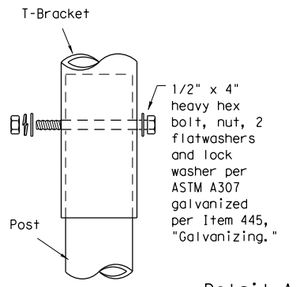

Detail A

9/16" hole may need to be drilled through post to accommodate bolt.

NOTE

The devices shall be installed per manufacturer's recommendations.
Installation procedures shall be provided to the Engineer by Contractor.

GENERAL NOTES:

1. The Wedge Anchor System and the Universal Anchor System with thin wall tubing post may be used to support up to 10 square feet of sign area.
2. The tubular socket, wedge and prefabricated T-bracket shall be permanently marked to indicate manufacturer. Method, design, and location of marking are subject to the approval of the TxDOT Traffic Standards Engineer.
3. Except for posts (13 BWG Tubing), clamps, nuts and bolts, all components shall be prequalified. A list of prequalified vendors may be obtained from the Material Producer List web page. The website address is: http://www.txdot.gov/business/producer list.htm
4. Material used as post with this system shall conform to the following specifications:
   13 BWG Tubing (2.375" outside diameter) (TWT)
   0.095" nominal wall thickness
   Seamless or electric-resistance welded steel tubing
   Steel shall be HSLAS Gr 55 per ASTM A1011 or ASTM A1008
   Other steels may be used if they meet the following:
   55,000 PSI minimum yield strength
   70,000 PSI minimum tensile strength
   18% minimum elongation in 2"
   Wall thickness (uncoated) shall be within the range of .083" to .099"
   Outside diameter (uncoated) shall be within the range of 2.369" to 2.381"
   Galvanization per ASTM 123 or ASTM A653 G210. For precoated steel tubing (ASTM A653), recoat tube outside diameter weld seam by metallizing with zinc wire per ASTM B833.
5. Sign blanks shall be the sizes and shapes shown on the plans.
6. Additional sign clamp required on the "T-bracket" post for 24" high signs. Place clamp at least 3" above bottom of sign when possible.
7. Sign supports shall not be spliced except where shown. Sign support posts shall not be spliced.
8. See the Traffic Operations Division website for detailed drawings of sign clamps and Wedge Anchor System components. The website address is: http://www.txdot.gov/publications/traffic.htm

WEDGE ANCHOR SYSTEM INSTALLATION PROCEDURE

1. Dig foundation hole. Where solid rock is encountered at ground level, the foundation shall be a minimum depth of 18". When solid rock is encountered below ground level, the foundation shall extend in the solid rock a minimum depth of 18" or provide a minimum foundation depth of 30". If solid rock is encountered, the socket/stub may be reduced in length as required to a minimum length of 18". Any material removed from the socket/stub shall be from the bottom and the clearance requirements given on SMD(GEN) must be followed. The inner surfaces of the socket/stub must remain free of concrete or other debris.
2. The Engineer may permit batches of concrete less than 2 cubic yards to be mixed with a portable, motor driven concrete mixer. For small placements less than 0.5 cubic yards, hand mixing in a suitable container may be allowed by Engineer. Place concrete into hole until it is approximately flush with the ground. Concrete shall be Class A.
3. Insert tubular socket into concrete until top of socket is approximaely 1/4 " above the concrete footing.
4. Plumb the socket. Allow a minimum 4 days for concrete to set, unless otherwise directed by Engineer..
5. Attach the sign to the sign post.
6. Insert the sign post into socket and align sign face with roadway.
7. Drive the wedge into the socket to secure post. This will leave approximately 3 inches of the wedge exposed.

UNIVERSAL ANCHOR SYSTEM INSTALLATION PROCEDURE

1. Dig foundation hole. Where solid rock is encountered at ground level, the foundation shall be a minimum depth of 18". When solid rock is encountered below ground level, the foundation shall extend in the solid rock a minimum depth of 18" or provide a minimum foundation depth of 30". If solid rock is encountered, the socket/stub may be reduced in length as required to a minimum length of 18". Any material removed from the socket/stub shall be from the bottom and the clearance requirements given on SMD(GEN) must be followed. The inner surfaces of the socket/stub must remain free of concrete or other debris.
2. Insert base post in hole to depths shown and backfill hole with concrete.
3. Level and plumb the base post using a torpedo level and allow concrete adequate time to set. The bottom of the slots provided in the stub pipe shall remain above the top of the concrete foundation.
4. Attach the sign to the sign post.
5. Install plastic insert around bottom of post.
6. Insert sign post into base post. Lower until the post comes to rest on steel rod.
7. Seat compression ring using a hammer. Typically, the top of compression ring will be approximately level with top of stub post when optimally installed.
8. Check sign post by hand to ensure it is unable to turn. If loose, increase the tightening of the compression ring.

Texas Department of Transportation
Traffic Operations Division

SIGN MOUNTING DETAILS SMALL ROADSIDE SIGNS WEDGE & UNIVERSAL ANCHOR WITH THIN WALL TUBING POST

SMD(TWT)-08

©TxDOT July 2002

DN: TXDOT	CK: TXDOT	DW: TXDOT	CK: TXDOT

REVISIONS	CONT	SECT	JOB	HIGHWAY
9-08				KLEIN RD
	DIST	COUNTY		SHEET NO.
	SAT	GUADALUPE		186

26E

DATE: 1/9/2020 3:46:11 PM
FILE: H:\projects\5101303\Design\Civil\Standards\Signing\smdtwt.dgn

DISCLAIMER:
The use of this standard is governed by the "Texas Engineering Practice Act". No warranty of any kind is made by TxDOT for any purpose whatsoever. TxDOT assumes no responsibility for the conversion of this standard to other formats or for incorrect results or damages resulting from its use.

1/9/2020 3:46:13 PM
H:\projects\510\30\03\Design\Civil\Standards\Roadway\MB15(1).dgn

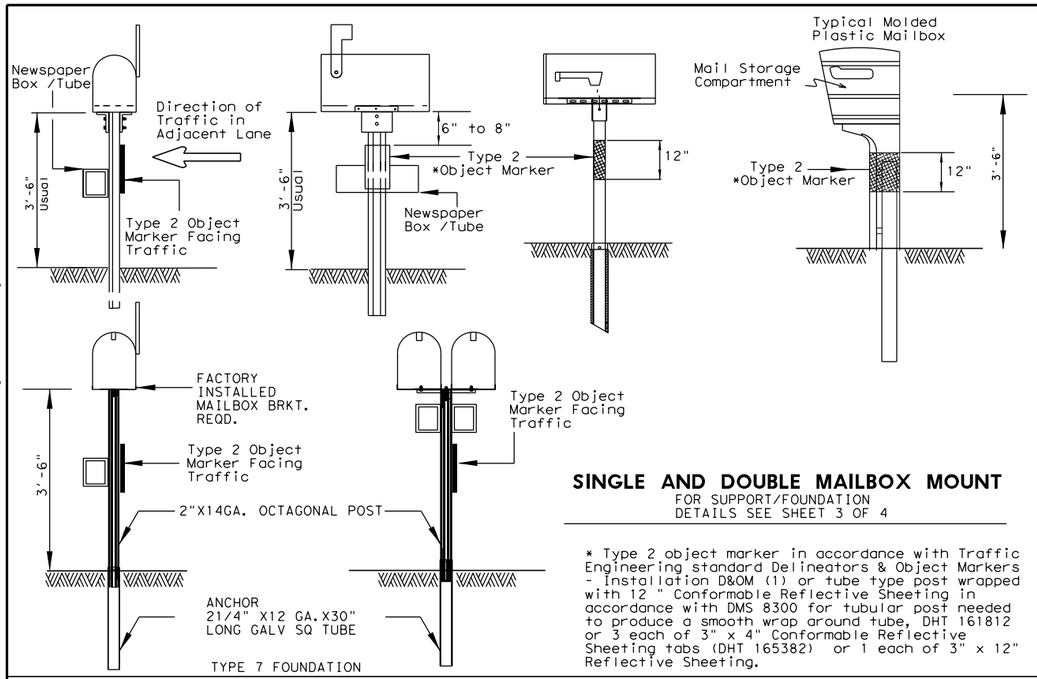

SINGLE AND DOUBLE MAILBOX MOUNT

FOR SUPPORT/FOUNDATION DETAILS SEE SHEET 3 OF 4

* Type 2 object marker in accordance with Traffic Engineering standard Delineators & Object Markers - Installation D&OM (1) or tube type post wrapped with 12 " Conformable Reflective Sheeting in accordance with DMS 8300 for tubular post needed to produce a smooth wrap around tube, DHT 161812 or 3 each of 3" x 4" Conformable Reflective Sheeting tabs (DHT 165382) or 1 each of 3" x 12" Reflective Sheeting.

Note: Mailbox installations in sidewalk areas shall be in accordance with the latest TxDOT Pedestrian Facilities Curb ramps standard *PED-XX for pedestrian facilities.

*PED-XX: XX is the standard year for example PED- 12 , PED-13,etc.

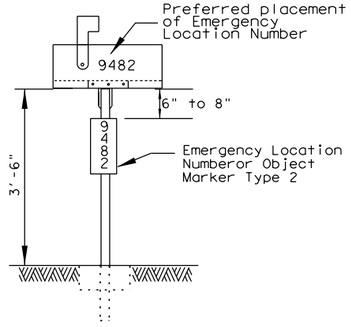

PLACEMENT OF EMERGENCY LOCATION NUMBER

Location Number shall be placed on: 1. A yellow, type A plate with class 1 flat surface reflective sheeting in accordance with DMS 8600. The color of numbers shall be black. or 2: A green or blue plate with white numbers attached to post beside the object marker. Other contrasting color configuration, as approved , may be used. (Use Same type plate as used for the type 2 Object Marker. Recommended sign size is 6" by 15")

MAILBOX SIZES

TYPICAL MAILBOX SIZE				LIGHT WEIGHT MATERIAL	
				SHEET METAL	**PLASTIC
SIZE	LENGTH	WIDTH	HEIGHT	MAXIMUM WEIGHT	
	INCHES			POUNDS	
SMALL	19 1/2	6	7	5	5
MEDIUM	22 1/2	8	11 1/2	7	7
LARGE	23 1/2*	11 1/2*	13 1/2*	10	10

* Maximum allowed dimensions for mailbox
** Excluding Molded Plastic on 4 X 4 Post

LOCKABLE ARCHITECTURAL MAILBOX SIZE (INCHES)					
VIEW	TOP	BOTTOM	FRONT SIDE	BACK SIDE	WEIGHT
SIDE	18	15	18.3	15	(POUNDS)
BACK	11 1/2	11 1/2		15	22.4

SEE TOP RIGHT CORNER OF SHEET 2 OF 4

Mailboxes shall be made of light weight sheet metal or light weight plastic. Lockable architectural mailboxes shall meet the requirements of the above table.

Heavy steel, cast iron or decorative mailboxes shall not be used on the state highway system.

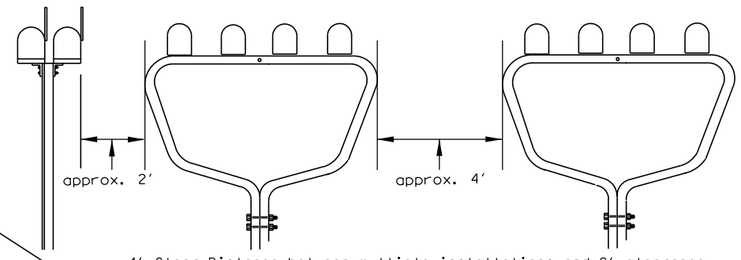

4' Clear Distance between multiple installations and 2' clearance between double or single installations and the multiple installation. DHT #'s 164116 or 149339.

MULTIPLE MAILBOX PLACEMENT

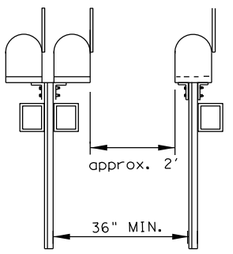

Clear Distance between single or double mounted posts. (Normally when 3 or more mailboxes are in one location, a multiple support is used).

SINGLE & DOUBLE MAILBOX PLACEMENT

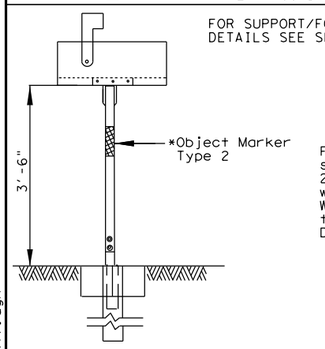

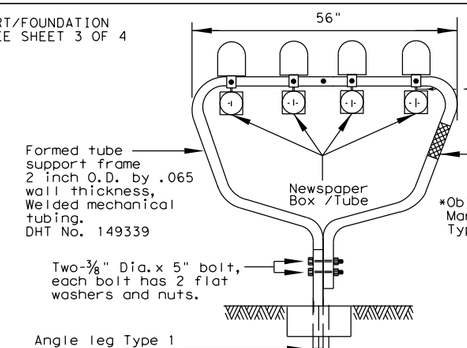

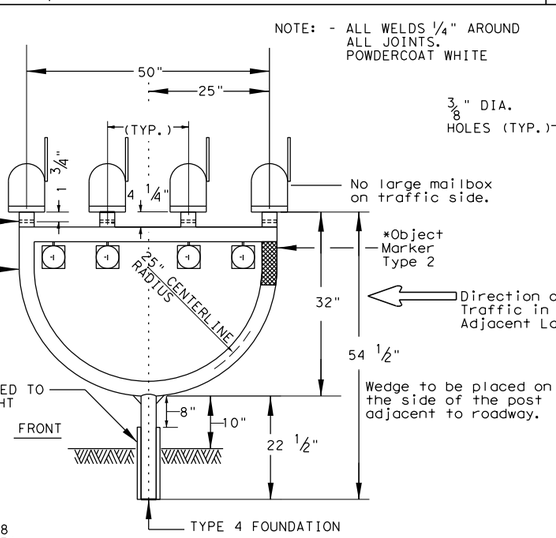

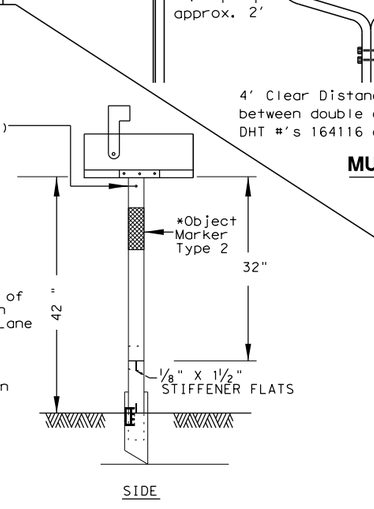

DOUBLE AND MULTIPLE MAILBOX MOUNT

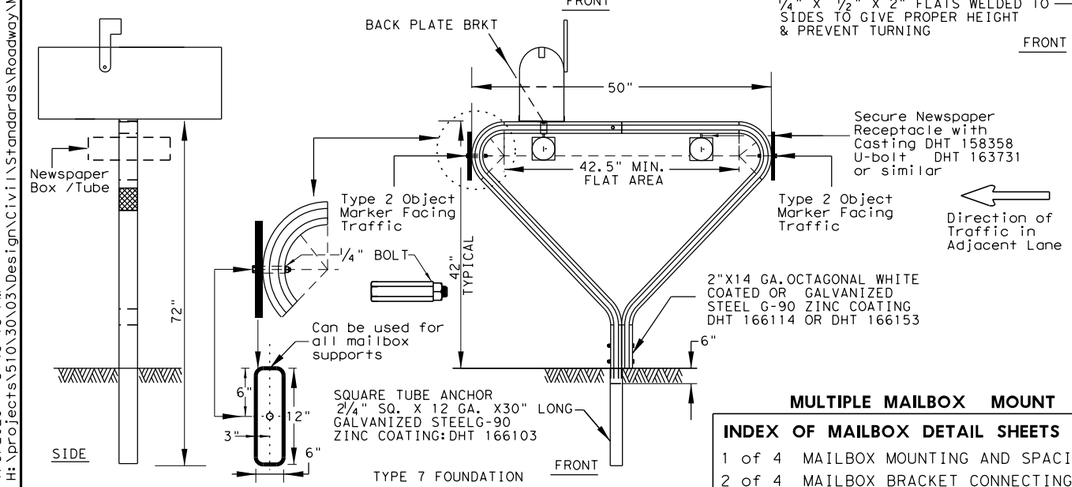

FOR SUPPORT/FOUNDATION DETAILS SEE SHEET 3 OF 4
FOR DHT NUMBERS SEE SHEET 4 OF 4

NEWSPAPER RECEPTACLE

A light weight receptacle for newspaper delivery can be attached to mailbox posts as shown on this page if the receptacle:

- Does not touch the mailbox.
- Does not present a hazard to traffic or delivery of the mail.
- Does not extend beyond the front of the mailbox.
- Does not display advertising, except the publication title.
- Newspaper receptacles on separate supports are prohibited.

LOCKABLE ARCHITECTURAL MAILBOX

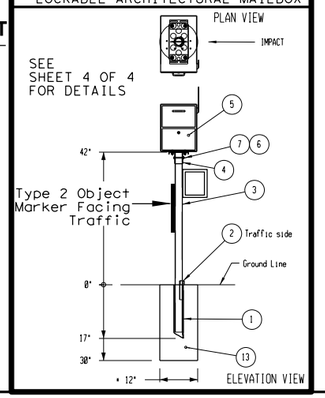

MULTIPLE MAILBOX MOUNT

INDEX OF MAILBOX DETAIL SHEETS

1 of 4 MAILBOX MOUNTING AND SPACING
2 of 4 MAILBOX BRACKET CONNECTING DETAILS
3 Of 4 MAILBOX SUPPORT / FOUNDATION
4 of 4 TABLE OF DHT NUMBERS

Texas Department of Transportation

Maintenance Division Standard

MAILBOX MOUNTING AND SPACING

MB-15(1)

FILE: MB14(1).DGN	DN: JEO	CK: JEO	DW:	CK:
© TxDOT APRIL 2015	CONT	SECT	JOB	HIGHWAY
REVISIONS: Added additional newspaper receptacle for double mailbox support				KLEIN RD
	DIST	COUNTY		SHEET NO.
	SAT	GUADALUPE		187

DISCLAIMER:
The use of this standard is governed by the "Texas Engineering Practice Act". No warranty of any kind is made by TxDOT for any purpose whatsoever. TxDOT assumes no responsibility for the conversion of this standard to other formats or for incorrect results or damages resulting from its use.

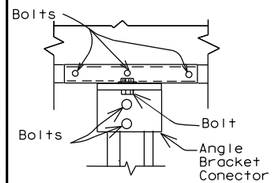

For bolt sizes see details below for "SMALL MAILBOX" and "MEDIUM AND LARGE MAILBOXES"

SINGLE MAILBOX

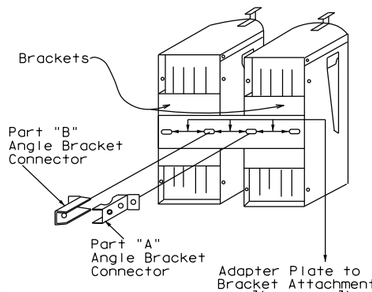

(Not permitted for Large Mailboxes)

DOUBLE MAILBOX

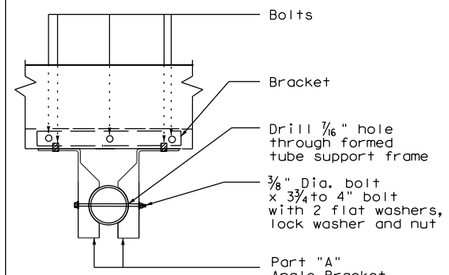

MULTIPLE MAILBOX

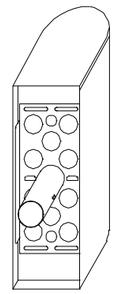

To be used with 2⅜" OD RR or thinwall Steel posts.

WELDED SINGLE MAILBOXBRACKET

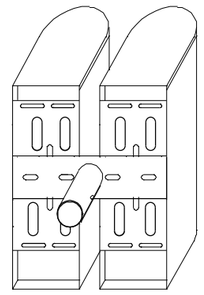

To be used with thinwall Steel posts. Not to be used with RR posts.

WELDED DOUBLE MAILBOX BRACKET WITHADAPTER PLATE

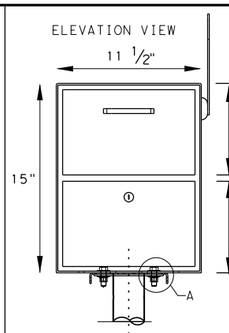

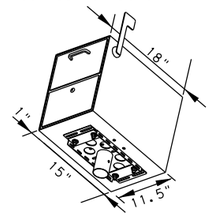

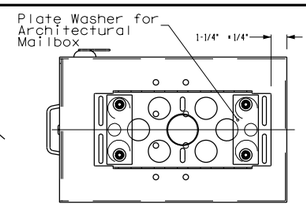

Preferred placement of Emergency Location Number

X~5.25" min; Y~5.75" min

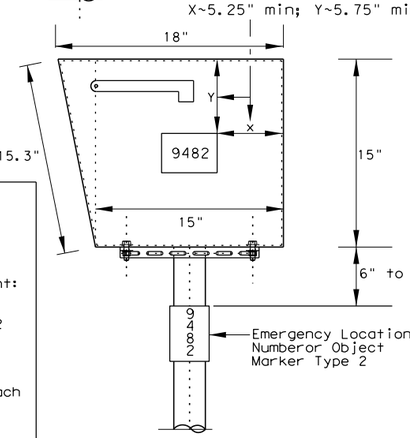

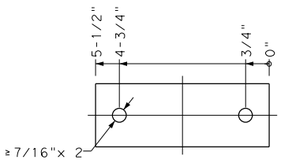

Plate Washer for Architectural Mailbox Plate, 2" x 1/8" ASTM A36 Steel

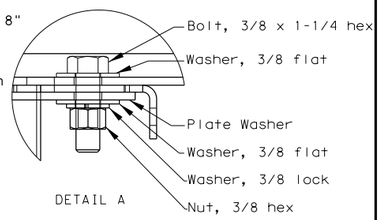

LOCKABLE ARCHITECTURAL MAILBOX CONNECTION DETAILS

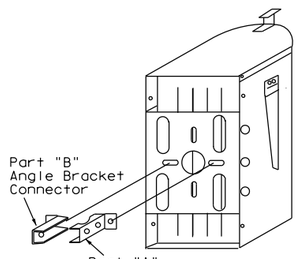

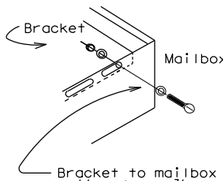

Bracket to mailbox attachment:
6 - ¼" Dia. x ¾" bolt w/ 2 flat washers and nut per each bolt.

Angle to bracket attachment:
2 - ⅜" Dia. x ¾" bolt with 2 flat washers, lock washer and nut per each bolt.

Angle to
2 - ⅜" Dia. x 2½" bolt with 2 flat washers, lock washer and nut per each bolt.

SMALL MAILBOX

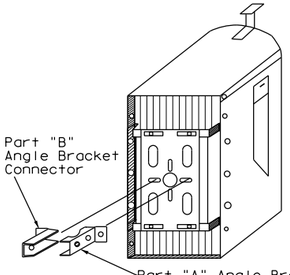

Use both Parts "A" and "B" Angle Bracket Connectors for Winged Channel Posts

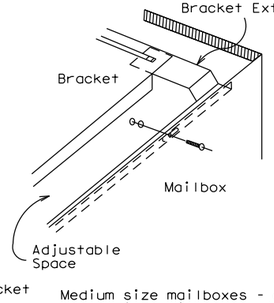

Bracket to mailbox attachment:
6 - ¼" Dia. x ¾" bolt w/2 flat washers and nut per each bolt.

Bracket to bracket extension attachment:
2 - ¼" Dia. x ¾" carriage bolt w/ flat washer, lock washer and nut per bolt (4 bolts required if 2 bracket extensions are used).

Angle to bracket attachment:
2 - ⅜" Dia. x ¾" bolt w/2 flat washers, lock washer and nut per each bolt.

Angle to mailbox support attachment:
2 - ⅜" Dia. x 2½" bolt w/2 flat washers, lock washer, and nut per each bolt.

Medium size mailboxes - one extension bracket
Large size mailboxes - two extension brackets

MEDIUM AND LARGE MAILBOXES

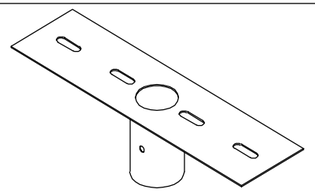

DHT 162323

For use with galvanized thinwall steel posts DHT # 143426 or powder-coated thinwall steel post DHT # 162911.

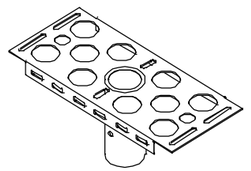

DHT 161443

For use with RCR post DHT # 161442 or galvanized thinwall steel post DHT # 143426 or powder-coated thinwall steel post. DHT # 162911.

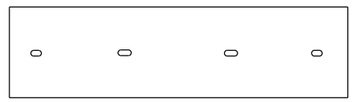

DHT #3789

Used for mounting two Mailboxes on the same post.

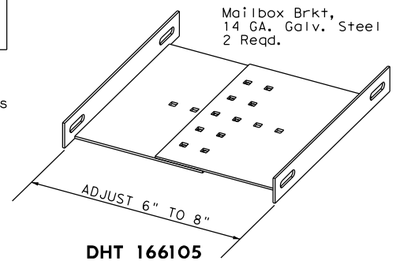

DHT 166105

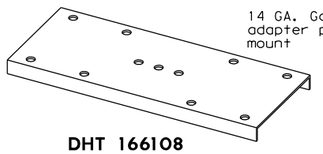

14 GA. Galv. Steel adapter plate for double mount

DHT 166108

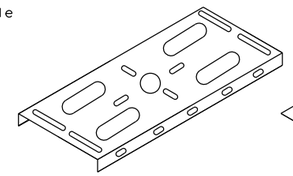

DHT 148939

Mailbox Bracket

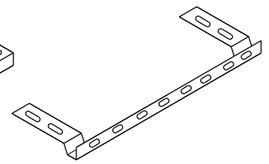

DHT 148938

Used for extending 6" wide bracket to attach larger mailboxes.

Bracket Extension

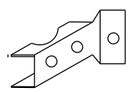

DHT 159489

Part "A" Angle Bracket Connector

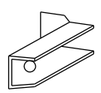

DHT 159490

Part "B" Angle Bracket Connector

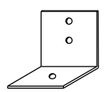

DHT 2917

Angle Bracket For Temporary Mailbox

HARDWARE AT TXDOT REGIONAL WAREHOUSES

Brackets and adapter plate shown in this section should be available to the Contractor when stated elsewhere in plans or specifications.

See Table of Applicable DHT Numbers on sheet 4 of 4 for DHT description and unit of measure.

GENERAL NOTES

1. Connecting hardware detailed on this sheet is for the hardware that the Department stocks at the Regional Warehouses. This hardware is available to the contractor only when so stated elsewhere in the plans or specification.
2. Hardware for mounting mailboxes to the support/foundation furnished by industry should be used when shown on the Maintenance Divisions "Approved Products List." Only mailbox hardware that have been crash tested in accordance with NCHRP Report 350, will be on the approved list.
3. Hardware furnished by industry shall be erected in accordance with the manufacturer's recommendation.
4. Bracket and bracket extension shall be constructed of 14 gauge galvanized steel sheet metal.
5. The angles, brackets and adapter plates shall be constructed of 12 gauge galvanized steel sheet metal.
6. Items with evidence of damage to the galvanized coating or wet storage stains (white rust) will not be accepted.

Texas Department of Transportation

Maintenance Division Standard

MAILBOX BRACKET CONNECTING DETAILS

MB-15(1)

FILE: MB14(1).DGN	DN: JEO	CK:	DW: JEO	CK:
©TxDOT APRIL 2015	CONT	SECT	JOB	HIGHWAY
REVISIONS ADDED DHT 163730				KLEIN RD
	DIST	COUNTY		SHEET NO.
	SAT	GUADALUPE		188

1/9/2020 3:46:14 PM
H:\projects\5103\03\03\Design\Civil\Standards\Roadway\MB15(1).dgn

DISCLAIMER:
The use of this standard is governed by the "Texas Engineering Practice Act". No warranty of any kind is made by TxDOT for any purpose whatsoever. TxDOT assumes no responsibility for the conversion of this standard to other formats or for incorrect results or damages resulting from its use.

1/9/2020 3:46:14 PM
H:\projects\510\30\03\Design\Civil\Standards\Roadway\MB15(1).dgn

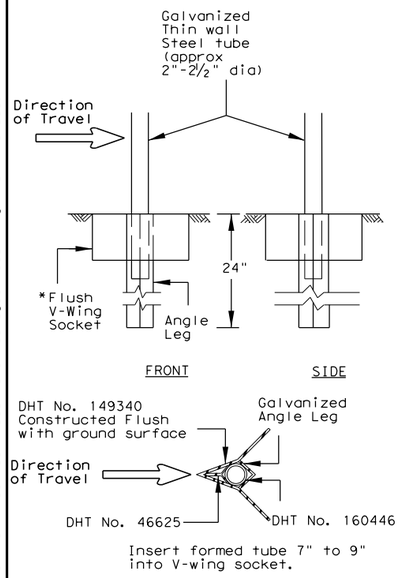

TYPE 1 SUPPORT/FOUNDATION

THIN WALL STEEL TUBE w/ V-LOC ANCHORAGE

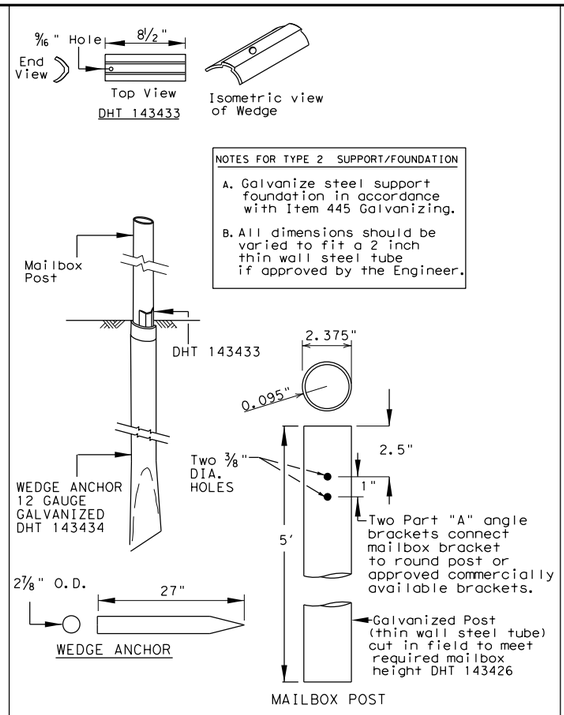

NOTES FOR TYPE 2 SUPPORT/FOUNDATION

A. Galvanize steel support foundation in accordance with Item 445 Galvanizing.

B. All dimensions should be varied to fit a 2 inch thin wall steel tube if approved by the Engineer.

TYPE 2 SUPPORT/FOUNDATION

THIN WALL STEEL TUBE w/ WEDGE ANCHOR SYSTEM

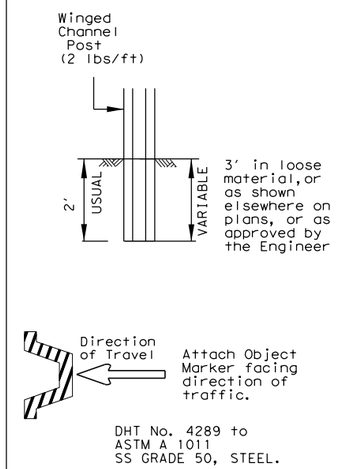

TYPE 3 SUPPORT/FOUNDATION

WINGED CHANNEL POST

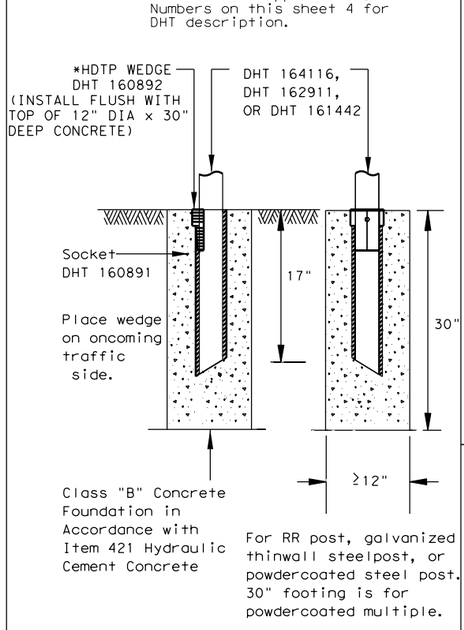

TYPE 4 SUPPORT/FOUNDATION

FOR WHITECOATED STEEL POST, MULTIPLE POST, AND RECYCLED RUBBER.

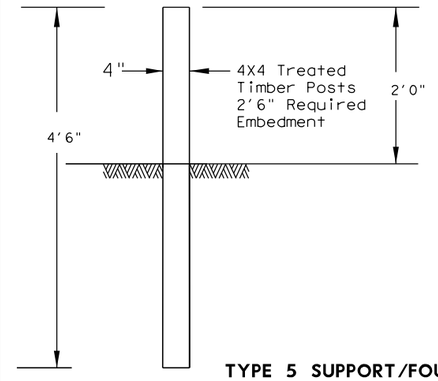

TYPE 5 SUPPORT/FOUNDATION

FOR ONE PIECE MOLDED PLASTIC MAILBOX

ONE PIECE MOLDED PLASTIC MAILBOXES

Molded Plastic Mailboxes shall be installed on 4"x4" treated timber posts only. The use of steel pipe or structural tubing in place of timber post is prohibited.

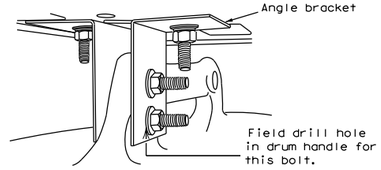

Placed on approved plastic drum as shown in the Compliant Work Zone Traffic Control Devices (CWZTCD).

Existing attachment hardware shall be used unless damaged. Damaged hardware shall be replaced.

TYPE 6 TEMPORARY MAILBOX SUPPORT

CONNECTION DETAIL

GENERAL NOTES

1. Erect post plumb or vertical.
2. When galvanized part is required galvanize in accordance with Item 445.
3. type 1, 2, 3, 4 or 7 supports or foundation can be used for single or double mailbox installations. The RCR post should be used only for a single installation with a small mailbox. The Type 5 support/foundation is used for the single molded plastic mailbox. The Type 4 support/foundation is used for the 2.375" O.D. RR post, thin wall steel post, and white multiple mailbox post.
4. The Type 1 or type 7 support/foundation can be used for a multiple mailbox mount.
5. The Type 4 support should be used with thin wall steel pipe for the medium, large and double mailbox installations.
6. Use a concrete footing as shown or when directed. Concrete footing will be required when soils do not hold the support/foundations in a stable condition.

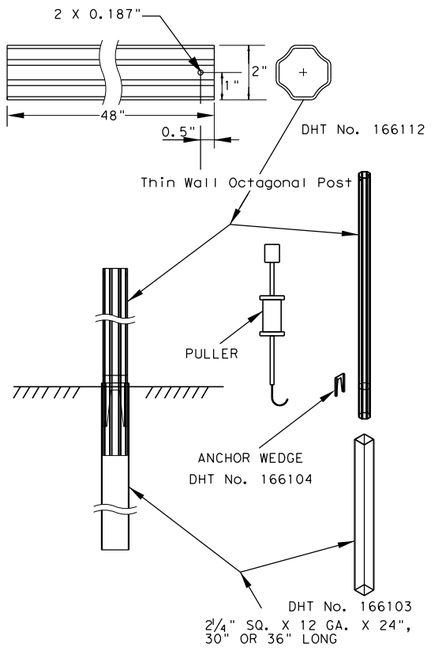

TYPE 7 MAILBOX SUPPORT/FOUNDATION

CONNECTION DETAIL

MB-(X) ASSM TY (XXX) (X) (XX) (OPTIONAL)

Type of Mailbox
- S = Single
- D = Double
- M = Multiple
- SP = Single Plastic

Type of Post
- WC = Winged Channel Post
- RR = Recycled Rubber
- TWW = Thin Walled White Tubing
- TWG = Thin Walled Galvanized Tubing
- TIM = Timber

Type of Foundation
- Ty 1 = V-Loc
- Ty 2 = Wedge Anchor Steel System
- Ty 3 = Winged Channel post
- Ty 4 = Wedge Anchor Plastic System
- Ty 5 = 4 X 4 Post
- Ty 7 = Wedge Anchor

Type of Bracket
- AB = Angle Bracket.
- TB = 2.375" Tube Bracket

DOUBLE AND LARGE MAILBOXES MUST BE ON STEEL POST.

*HDTP: High density thermoplastic polyesters

Texas Department of Transportation

Maintenance Division Standard

MAILBOX SUPPORT AND FOUNDATION

MB-15(1)

FILE: MB14(1).DGN	DN: JEO	CK:	DW: JEO	CK:
©TxDOT APRIL 2015	CONT	SECT	JOB	HIGHWAY
REVISIONS				KLEIN RD
	DIST	COUNTY		SHEET NO.
	SAT	GUADALUPE		189

LOCKABLE ARCHITECTURAL MAILBOX

SINGLE-MOUNT INSTALLATION PARTS			
#	PART NAME	PART/DHT #	QTY
1	SOCKET, TYPE 4 FOUNDATION	160891	1
2	WEDGE FOR TYPE 4 FOUNDATION	160892	1
3	THIN-WALL WHITE STEEL TUBE 2.375 OD	162911	1
4	BRACKET FOR ATTACHING MAILBOX	161443	1
5	ARCHITECTURAL MAILBOX	SEE NOTE	1
6	NUT, 5/16" HEX	NUT, 5/16" HEX	1
7	BOLT, 5/16 X 3 HEX	GRADE 5	1
8	PLATE WASHER FOR ARCHITECTURAL MAILBOX	SEE SEE SHEET 2	2
9	WASHER, 3/8 FLAT		8
10	WASHER, 3/8 LOCK		4
11	NUT, 3/8 HEX		4
12	BOLT, 3/8 X 1-1/4 HEX	GRADE 5	4
13	CONCRETE, CLASS B (2000 PSI)		1

LOCKABLE ARCHITECTURAL MAILBOX DETAILS

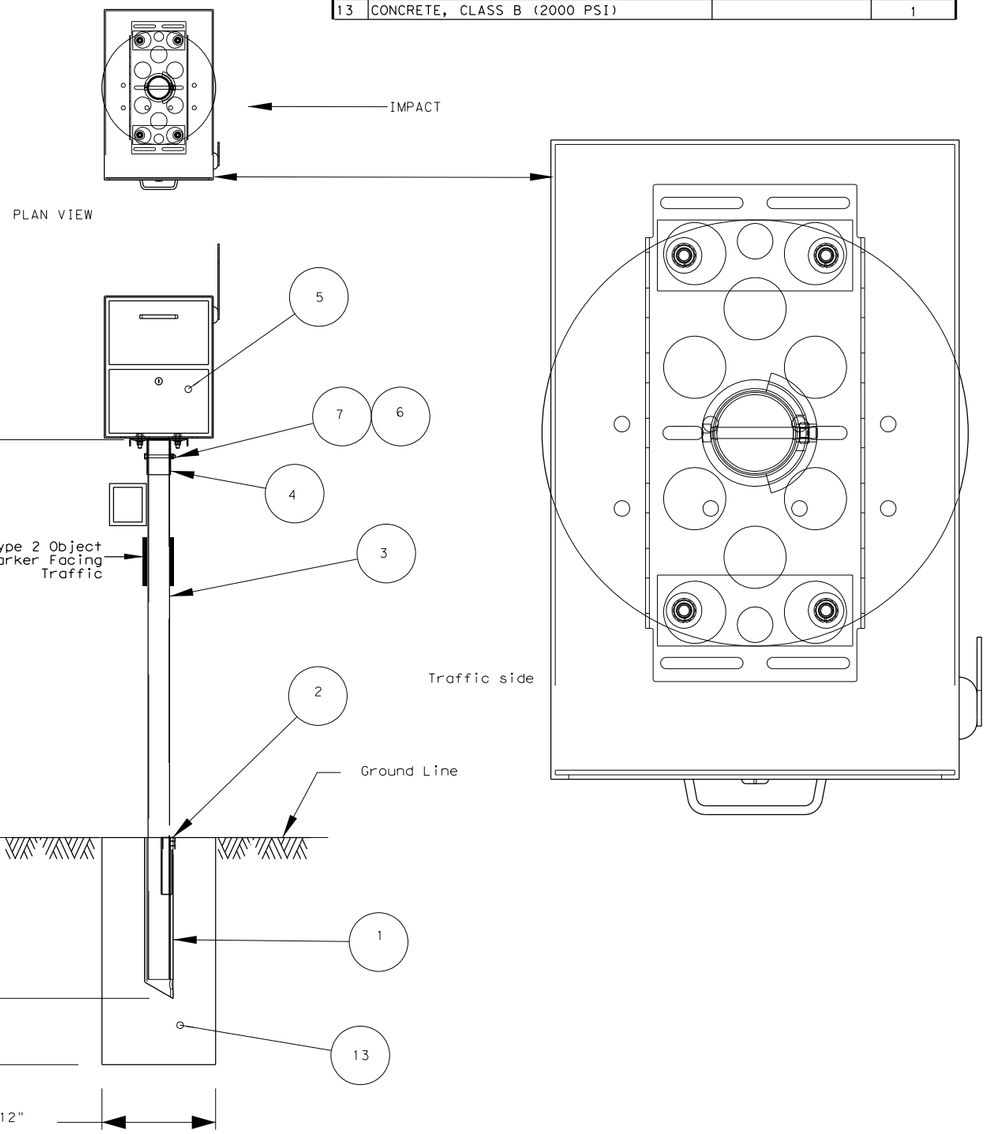

TABLE OF APPLICABLE DHT NUMBERS	
DHT NUMBER	DESCRIPTION
	FOUNDATIONS
46625	WEDGE FOR V-WING SOCKET FOR TYPE 1 FOUNDATION
149340	V-WING SOCKET FOR TYPE 1 FOUNDATION
143433	WEDGE FOR TYPE 2 FOUNDATION
143434	ANCHOR FOR TYPE 2 FOUNDATION
166103	ANCHOR FOR TYPE 7 FOUNDATION
160891	SOCKET FOR TYPE 4 FOUNDATION
160892	WEDGE FOR TYPE 4 FOUNDATION
166104	WEDGE FOR TYPE 7 FOUNDATION
	POSTS
4289	WINGED CHANNEL MAILBOX POST
149339	MULTIPLE MAILBOX POST (GALVANIZED TUBING)
164116	MULTIPLE MAILBOX POST (WHITE COATED)
166114	MULTIPLE MAILBOX POST (WHITE COATED OCTAGONAL)
166153	MULTIPLE MAILBOX POST (GALVANIZED OCTAGONAL)
161442	RECYCLED RUBBER POST. FOR SMALL MAILBOX ONLY
143426	THIN-WALL GALVANIZED STEEL TUBE 2.375" OUTER DIAMETER
162911	THINWALL WHITE STEEL TUBE 2.375" OUTER DIAMETER
166152	SINGLE OR DOUBLE THIN-WALL MAILBOX POST GALVANIZED 2" OCTAGONAL
166112	SINGLE OR DOUBLE THIN-WALL MAILBOX POST WHITECOATED 2" OCTAGONAL
	REFLECTIVE SHEETING
161812	REFLECTIVE SHEETING FOR EMERGENCY LOCATION NUMBER PANEL
	CONNECTING HARDWARE
2917	ANGLE BRACKET USED FOR TEMPORARY MAILBOX SUPPORT
166105	BRACKET FOR SINGLE MOUNTING OF MAILBOXES (MOUNTING KIT)
3789	PLATE FOR DOUBLE MOUNTING OF MAILBOXES
166108	BRACKET FOR DOUBLE MOUNTING OF MAILBOXES (MOUNTING KIT)
166111	BRACKET FOR MULTIPLE MOUNTING OF MAILBOXES (MOUNTING KIT)
148939	BRACKET FOR ATTACHING SMALL OR MEDIUM SIZE MAIL BOX
148938	EXTENDER TO BRACKET FOR ATTACHING LARGE MAILBOX
159489	ANGLE BRACKET PART A
159490	ANGLE BRACKET PART B
162323	BRACKET FOR DOUBLE MOUNTING OF MAILBOXES ON THINWALL STEEL POST, GALVANIZED OR POWDERCOATED.
161443	BRACKET FOR ATTACHING MAILBOX TO RECYCLED RUBBER POST AND TO MULTIPLE WHITE MAILBOX POST
158358	CASTING (NEWSPAPER RECEPTACLE BRACKET)
163731	U-BOLT (NEWSPAPER RECEPTACLE BRACKET)
160698	BOLT;HEX HEAD, GALV;3/8"DIA X 3/4"L HD, W/2-FLAT WASHERS
163750	BOLT;HEX HEAD, GALV;3/8" X 1-1/2, 16 NC, W/WASHERS
160701	BOLT;HEX HEAD, GALV;3/8"DIA X 2-1/2"L, HD, W/2-FLAT WASHERS
163730	BOLT;HEX HEAD, GALV;3/8" X 3-1/2", NC, W/NUT, 2 FLAT WASHERS
160699	BOLT;HEX HEAD, GALV;3/8"DIA X 3-3/4"L HD, W/2-FLAT WASHERS
160700	BOLT;HEX HEAD, GALV;3/8"DIA X 4"L HD, W/2-FLAT WASHERS

DISCLAIMER:
The use of this standard is governed by the "Texas Engineering Practice Act". No warranty of any kind is made by TxDOT for any purpose whatsoever. TxDOT assumes no responsibility for the conversion of this standard to other formats or for incorrect results or damages resulting from its use.

1/9/2020 3:46:15 PM
H:\projects\510\30\03\Design\Civil\Standards\Roadway\MB15(1).dgn

Texas Department of Transportation — Maintenance Division Standard

DHT NUMBERS TABLE

MB-15(1)

FILE:MB14(1).DGN	DN:	CK:	DW:	CK:
© TxDOT APRIL 2015	CONT	SECT	JOB	HIGHWAY
REVISIONS				KLEIN RD
	DIST	COUNTY		SHEET NO.
	SAT	GUADALUPE		190

DISCLAIMER:
The use of this standard is governed by the "Texas Engineering Practice Act". No warranty of any kind is made by TxDOT for any purpose whatsoever. TxDOT assumes no responsibility for the conversion of this standard to other formats or for incorrect results or damages resulting from its use.

DATE: 1/9/2020 3:46:17 PM
FILE: H:\Projects\510130103\Design\Civil\Standards\Roadway\mb-14(2).dgn

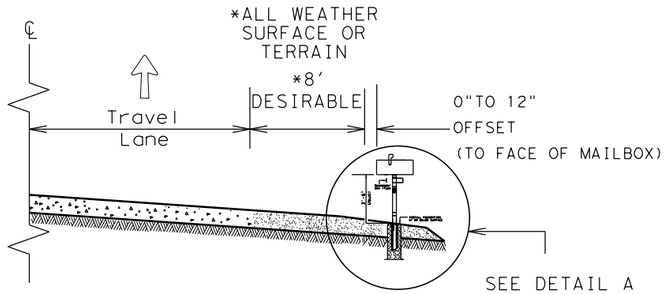

CASE 1. OFF TRAVEL WAY DELIVERY

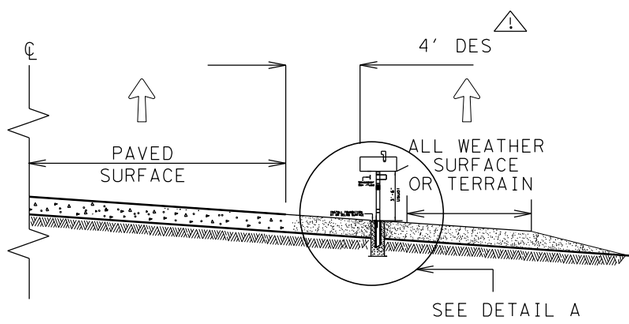

CASE 2. BACK SIDE DELIVERY

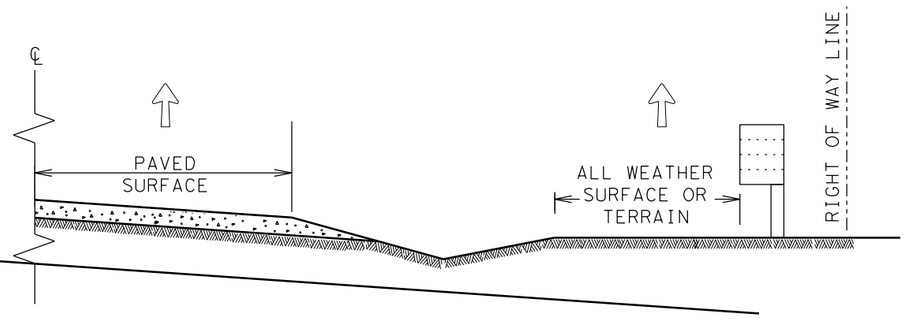

CASE 3. DELIVERY NEAR RIGHT OF WAY LINE

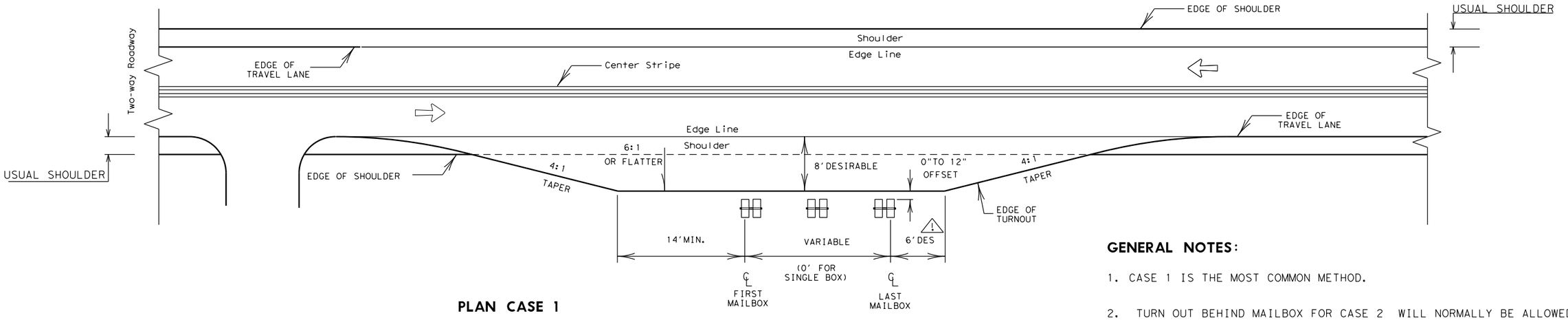

PLAN CASE 1

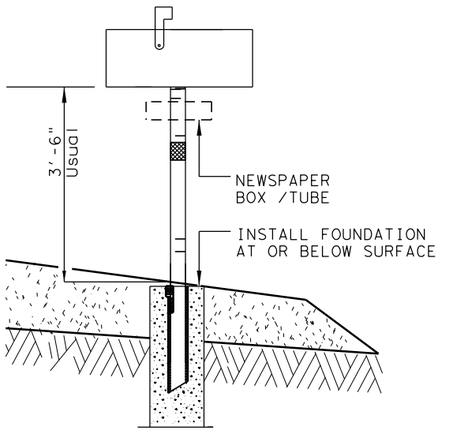

DETAIL A

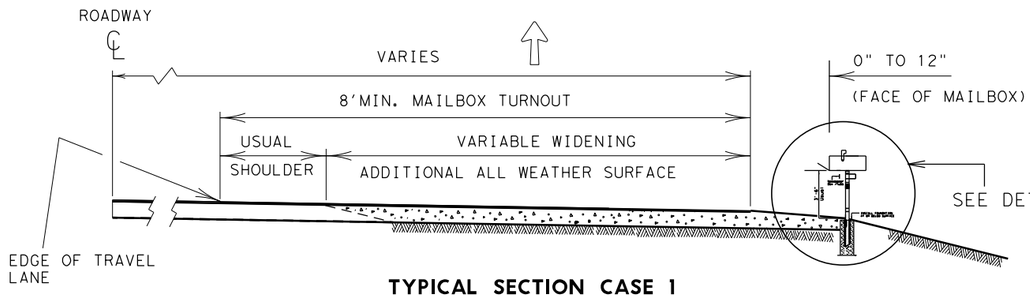

TYPICAL SECTION CASE 1

MAIL DELIVERY VEHICLE TRAVEL DIRECTION

GENERAL NOTES:

1. CASE 1 IS THE MOST COMMON METHOD.
2. TURN OUT BEHIND MAILBOX FOR CASE 2 WILL NORMALLY BE ALLOWED FOR NATURAL TERRAIN THAT WILL SERVE AS AN ALL WEATHER SURFACE.
3. ALL WEATHER DRIVEWAYS FOR CASE 3 MAILBOXES LOCATED AT THE RIGHT OF WAY LINE SHOULD NORMALLY BE PLACED IN CONJUNCTION WITH COUNTY ROADS OR OTHER CONNECTING COMMUNITY ROADS OR STREETS. IF THE NUMBER OF MAILBOXES EXCEEDS FOUR, A COMMUNITY MAIL BOX SHOULD BE ENCOURAGED AT THESE LOCATIONS.

Texas Department of Transportation

Maintenance Division Standard

Guideline

MAILBOX SIDE ROAD PLACEMENT AND TURNOUTS
MB-14(2)

FILE: MB14(2).DGN	DN: JEO	CK:	DW: JEO	CK:	
© TxDOT MAY 2014	CONT	SECT	JOB	HIGHWAY	
REVISIONS DECEMBER 2012-NEW TXDOT TITLE BLOCK				KLEIN RD	
	DIST	COUNTY		SHEET NO.	
	SAT	GUADALUPE		191	

DISCLAIMER:
The use of this standard is governed by the "Texas Engineering Practice Act". No warranty of any kind is made by TxDOT for any purpose whatsoever. TxDOT assumes no responsibility for the conversion of this standard to other formats or for incorrect results or damages resulting from its use.

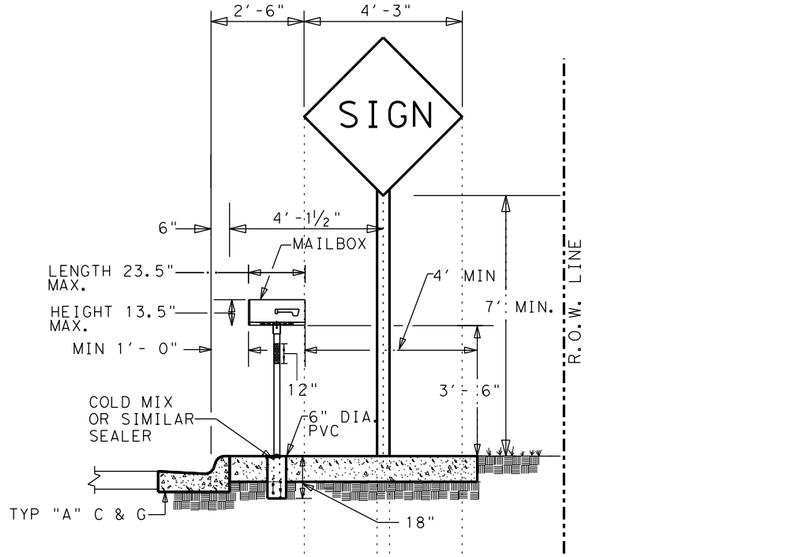

MAILBOX SIDEWALK INSTALLATION RELATIVE TO ANY OTHER OBSTRUCTION SUCH AS A SIGN
(MINIMUM BORDER DISTANCE)

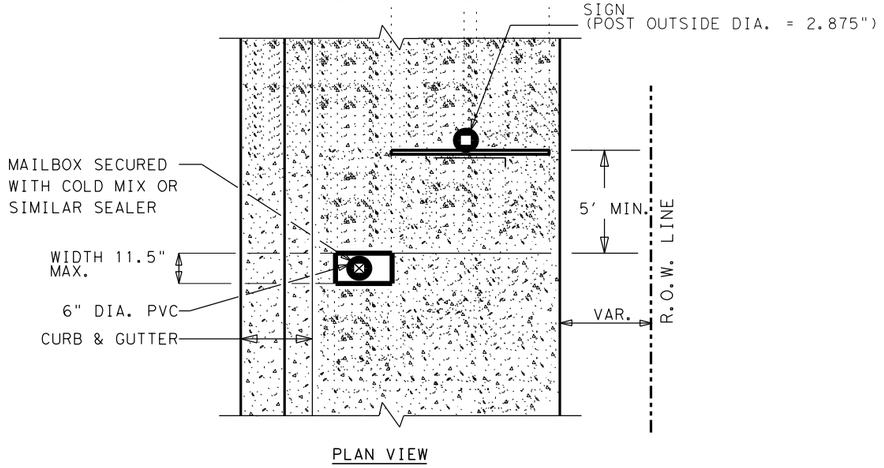

PLAN VIEW

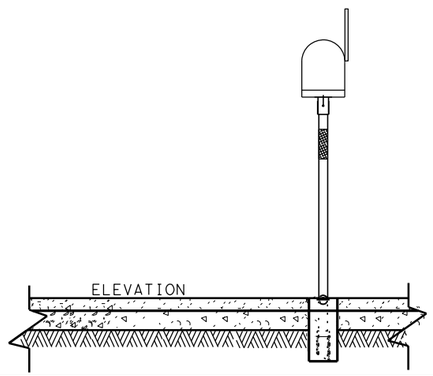

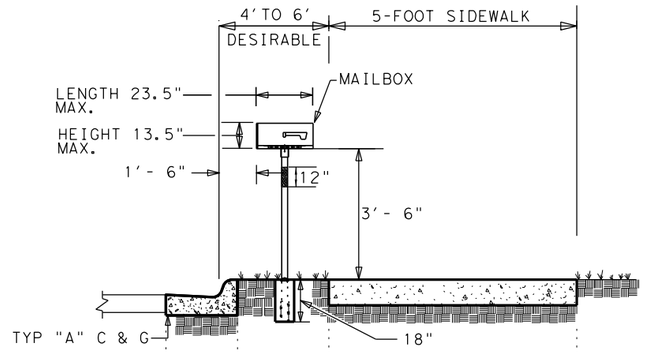

MAILBOX SIDEWALK INSTALLATION
(DESIRABLE BORDER DISTANCE)

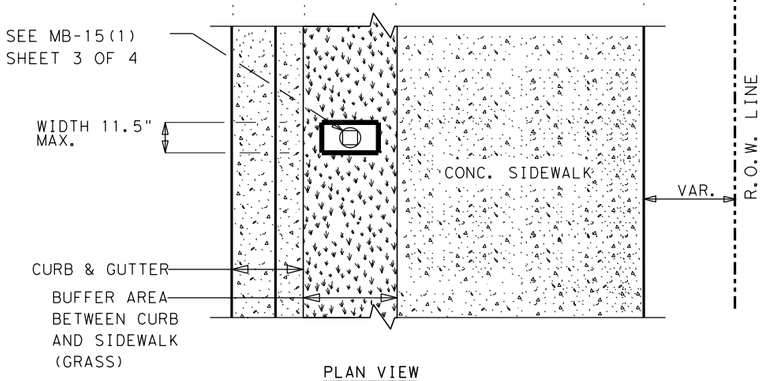

PLAN VIEW

Texas Department of Transportation | Maintenance Division Standard

SINGLE MAILBOX PLACEMENT BEHIND CURBS WITH OR WITHOUT SIDEWALKS

MB-14(2A)

FILE: MB-14(2A)	DN:		CK:	DW:		CK:
©TxDOT MAY 2014	CONT	SECT	JOB		HIGHWAY	
REVISIONS					KLEIN RD	
	DIST	COUNTY			SHEET NO.	
	SAT	GUADALUPE			192	

DATE: 1/9/2020 3:46:18 PM
FILE: H:\projects\510\30\03\Design\Civil\Standards\Roadway\mb-14(2).dgn

DISCLAIMER:
The use of this standard is governed by the "Texas Engineering Practice Act". No warranty of any kind is made by TxDOT for any purpose whatsoever. TxDOT assumes no responsibility for the conversion of this standard to other formats or for incorrect results or damages resulting from its use.

DATE: 1/9/2020 3:46:18 PM
FILE: H:\projects\5103003\Design\Civil\Standards\Roadway\mb-14(2).dgn

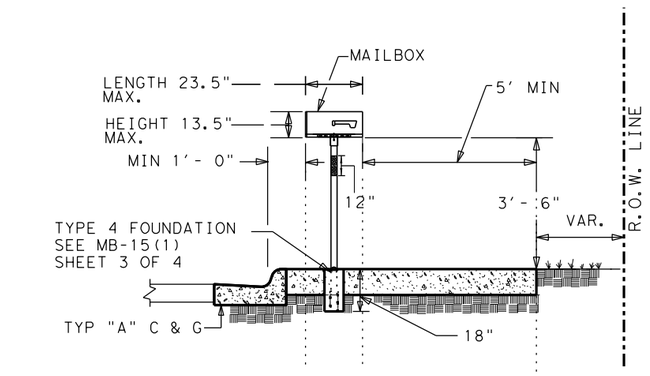

MAILBOX SIDEWALK INSTALLATION RELATIVE TO ANY OTHER OBSTRUCTION SUCH AS A SIGN
(MINIMUM BORDER DISTANCE)

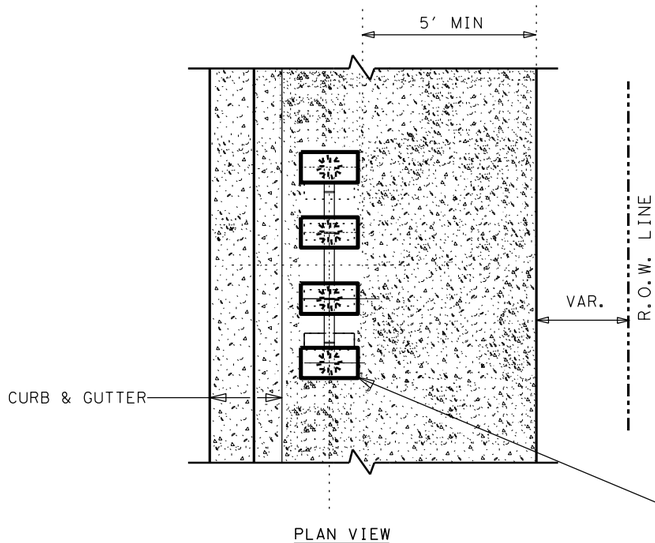

PLAN VIEW

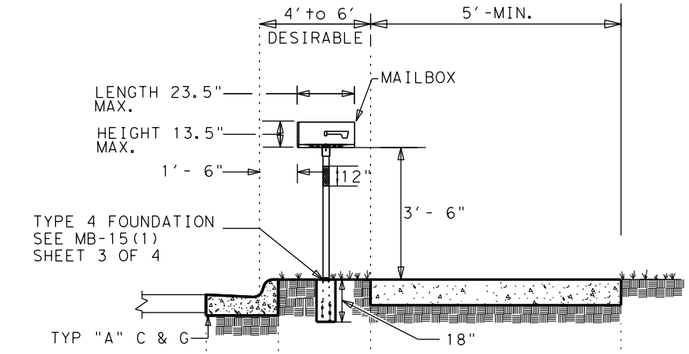

MAILBOX SIDEWALK INSTALLATION
(DESIRABLE BORDER DISTANCE)

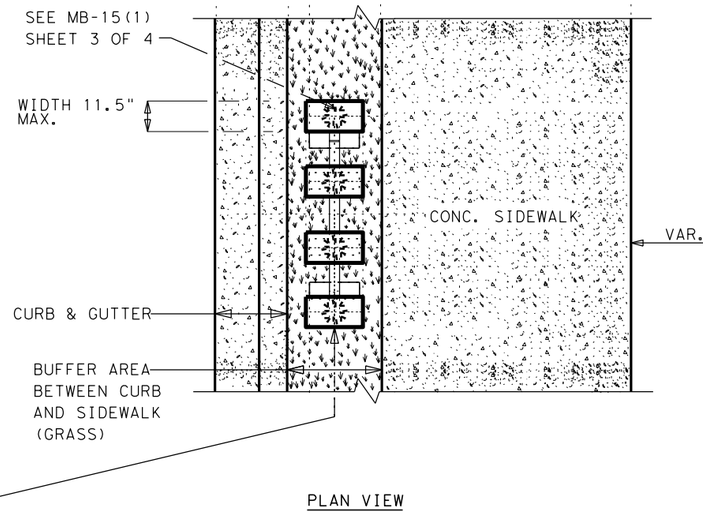

PLAN VIEW

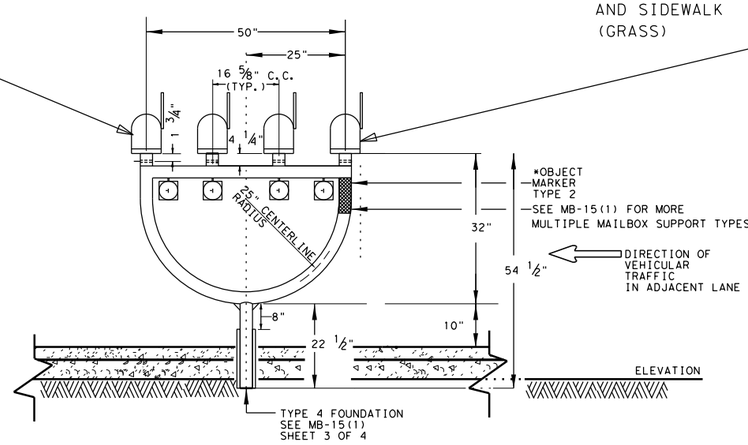

SHEET 3 OF 3

Texas Department of Transportation

Maintenance Division Standard

MULTIPLE MAILBOX PLACEMENT BEHIND CURBS WITH OR WITHOUT SIDEWALKS

MB-14(2B)

FILE: MB-14(2A)	DN:	CK:	DW:	CK:
© TxDOT MAY 2014	CONT	SECT	JOB	HIGHWAY
REVISIONS				KLEIN RD
	DIST	COUNTY		SHEET NO.
	SAT	GUADALUPE		193

Plotted on: 1/9/2020

Design Filename: H:\Projects\510\30\03\Design\Civil\Drainage\5103003_WKleinRd_HYDDATA.dgn

HEC-RAS CROSS-SECTION LAYOUT

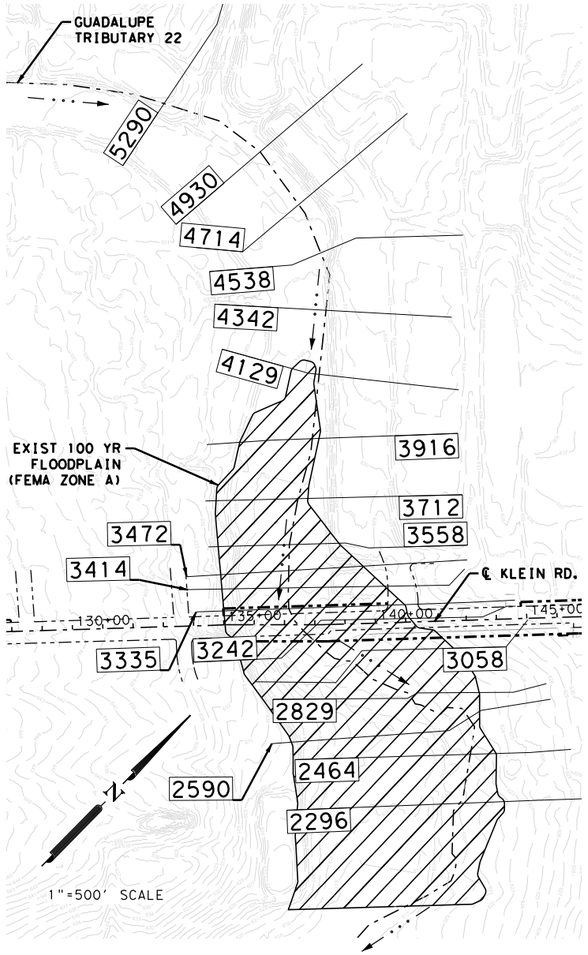

NOTE:
1. STORM DRAIN ROUTING INCLUDES SYSTEM A AND SYSTEM B OUTFALLING INTO RIVER STATION 3242 RESULTING IN NEGLIGIBLE RISE IN WATER SURFACE ELEVATIONS LESS THAN 0.1'

HEC-RAS BRIDGE UPSTREAM

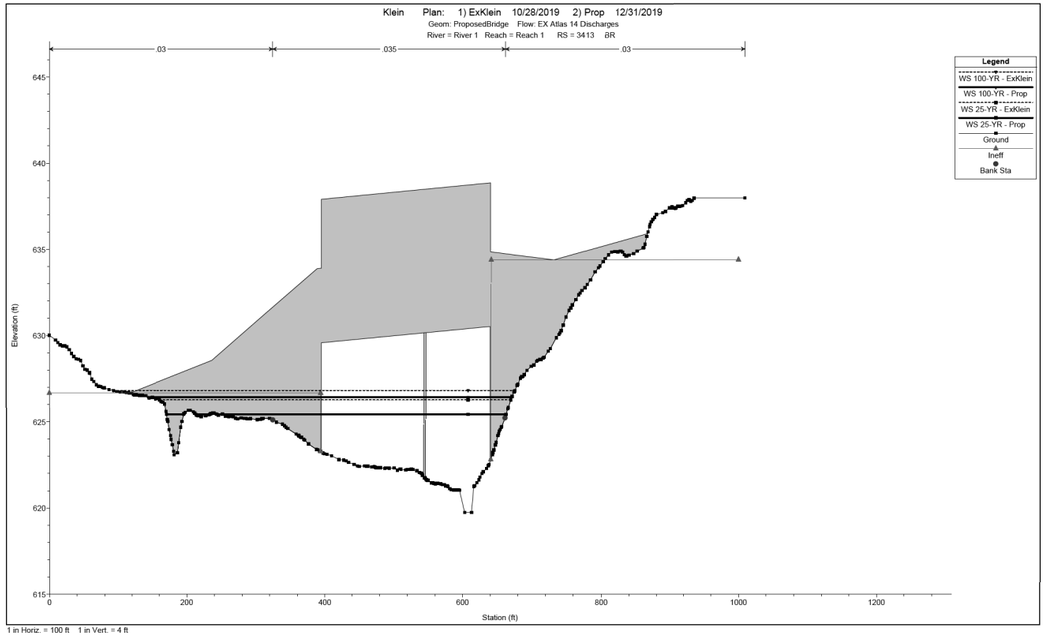

HEC-RAS CHANNEL PROFILE

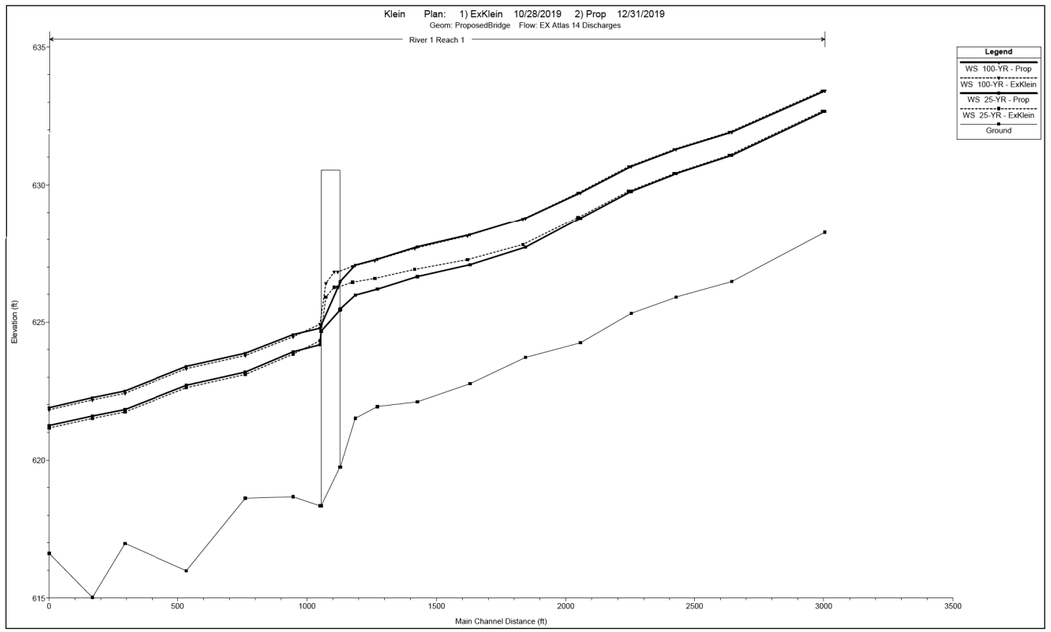

HEC-RAS BRIDGE OUTPUT

Plan: Prop River 1 Reach 1 RS: 3413 Profile: 25-YR

E.G. US. (ft)	625.94	Element	Inside BR US	Inside BR DS
W.S. US. (ft)	625.48	E.G. Elev (ft)	625.93	625.48
Q Total (cfs)	4713.10	W.S. Elev (ft)	625.43	624.67
Q Bridge (cfs)	4713.10	Crit W.S. (ft)	624.26	624.19
Q Weir (cfs)		Max Chl Dpth (ft)	5.68	6.33
Weir Sta Lft (ft)		Vel Total (ft/s)	5.65	6.59
Weir Sta Rgt (ft)		Flow Area (sq ft)	834.74	715.19
Weir Submerg		Froude # Chl	0.42	0.51
Weir Max Depth (ft)		Specif Force (cu ft)	2344.94	2231.39
Min El Weir Flow (ft)	626.68	Hydr Depth (ft)	3.45	2.96
Min El Prs (ft)	630.53	W.P. Total (ft)	254.81	252.88
Delta EG (ft)	0.56	Conv. Total (cfs)	78170.3	57168.5
Delta WS (ft)	1.30	Top Width (ft)	242.00	242.00
BR Open Area (sq ft)	1951.89	Frctn Loss (ft)	0.35	0.04
BR Open Vel (ft/s)	6.59	C & E Loss (ft)	0.10	0.10
Coef of Q		Shear Total (lb/sq ft)	0.74	1.20
Br Sel Method	Energy only	Power Total (lb/ft s)	0.00	0.00

Plan: Prop River 1 Reach 1 RS: 3413 Profile: 100-YR

E.G. US. (ft)	627.08	Element	Inside BR US	Inside BR DS
W.S. US. (ft)	626.48	E.G. Elev (ft)	627.06	626.38
Q Total (cfs)	6891.70	W.S. Elev (ft)	626.42	624.88
Q Bridge (cfs)	6891.70	Crit W.S. (ft)	624.91	624.88
Q Weir (cfs)		Max Chl Dpth (ft)	6.67	6.54
Weir Sta Lft (ft)		Vel Total (ft/s)	6.42	8.98
Weir Sta Rgt (ft)		Flow Area (sq ft)	1073.72	767.28
Weir Submerg		Froude # Chl	0.44	0.68
Weir Max Depth (ft)		Specif Force (cu ft)	3835.00	3412.91
Min El Weir Flow (ft)	626.68	Hydr Depth (ft)	4.44	3.17
Min El Prs (ft)	630.53	W.P. Total (ft)	258.76	253.74
Delta EG (ft)	1.50	Conv. Total (cfs)	117710.5	63632.6
Delta WS (ft)	1.70	Top Width (ft)	242.00	242.00
BR Open Area (sq ft)	1951.89	Frctn Loss (ft)	0.42	0.04
BR Open Vel (ft/s)	8.98	C & E Loss (ft)	0.26	0.36
Coef of Q		Shear Total (lb/sq ft)	0.89	2.21
Br Sel Method	Energy only	Power Total (lb/ft s)	0.00	0.00

DESIGN

INTERIM REVIEW
DOCUMENT INCOMPLETE. NOT INTENDED FOR PERMIT, BIDDING OR CONSTRUCTION.
ENGINEER: TYLER PAYNE DUBE
P.E. SERIAL NO: 118612
DATE: 1/9/2020

APPROVAL

INTERIM REVIEW
DOCUMENT INCOMPLETE. NOT INTENDED FOR PERMIT, BIDDING OR CONSTRUCTION.
ENGINEER: JOHN A. TYLER
P.E. SERIAL NO: 105193
DATE: 1/9/2020

REV. NO.	DATE	DESCRIPTION	BY

PAPE-DAWSON ENGINEERS
SAN ANTONIO | AUSTIN | HOUSTON | FORT WORTH | DALLAS
2000 NW LOOP 410 | SAN ANTONIO, TX 78213 | 210.375.9000
TBPE FIRM REGISTRATION #470 | TBPLS FIRM REGISTRATION #10028800

City of New Braunfels

KLEIN RD PHASE 2

HYDRAULIC DATA SHEETS

SHEET 1 OF 2

DGN:	STATE	PROJECT NO.	ROADWAY
CHK DGN:	TEXAS	NB 18-026	KLEIN RD
DWG:	COUNTY	CITY	SHEET NO.
CHK DWG:	GUADALUPE	NEW BRAUNFELS	194

HEC-RAS CROSS-SECTION OUTPUT

HEC-RAS River: River 1 Reach: Reach 1

Reach	River Sta	Profile	Plan	Q Total	Min Ch El	W.S. Elev	Crit W.S.	E.G. Elev	E.G. Slope	Vel Chnl	Flow Area	Top Width	Froude # Chl
				(cfs)	(ft)	(ft)	(ft)	(ft)	(ft/ft)	(ft/s)	(sq ft)	(ft)	
Reach 1	5290	25-YR	ExKlein	4560.00	628.26	632.67		633.30	0.008026	6.34	719.06	230.93	0.58
Reach 1	5290	25-YR	Prop	4560.00	628.26	632.67		633.30	0.008024	6.34	719.13	230.97	0.58
Reach 1	5290	100-YR	ExKlein	6708.00	628.26	633.41		634.30	0.009745	7.63	899.46	276.89	0.66
Reach 1	5290	100-YR	Prop	6708.00	628.26	633.41		634.30	0.009746	7.63	899.44	276.89	0.66
Reach 1	4930	25-YR	ExKlein	4560.00	626.47	631.07		631.35	0.003523	4.33	1093.38	405.73	0.39
Reach 1	4930	25-YR	Prop	4560.00	626.47	631.07		631.35	0.003528	4.33	1092.84	405.70	0.39
Reach 1	4930	100-YR	ExKlein	6708.00	626.47	631.91		632.25	0.003257	4.74	1459.50	485.78	0.39
Reach 1	4930	100-YR	Prop	6708.00	626.47	631.91		632.25	0.003256	4.74	1459.77	485.83	0.39
Reach 1	4714	25-YR	ExKlein	4560.00	625.91	630.41		630.66	0.002894	4.01	1159.36	393.48	0.35
Reach 1	4714	25-YR	Prop	4560.00	625.91	630.41		630.65	0.002904	4.02	1158.09	393.39	0.35
Reach 1	4714	100-YR	ExKlein	6708.00	625.91	631.29		631.60	0.002711	4.43	1516.21	421.30	0.35
Reach 1	4714	100-YR	Prop	6708.00	625.91	631.29		631.60	0.002708	4.43	1516.72	421.35	0.35
Reach 1	4538	25-YR	ExKlein	4560.00	625.32	629.77		630.07	0.003705	4.48	1051.06	425.23	0.40
Reach 1	4538	25-YR	Prop	4560.00	625.32	629.76		630.06	0.003732	4.49	1048.45	424.81	0.40
Reach 1	4538	100-YR	ExKlein	6708.00	625.32	630.67		631.04	0.003627	5.09	1422.96	511.67	0.41
Reach 1	4538	100-YR	Prop	6708.00	625.32	630.67		631.04	0.003617	5.08	1424.46	511.73	0.41
Reach 1	4342	25-YR	ExKlein	4560.00	624.25	628.81	627.26	629.22	0.005096	5.19	895.69	279.07	0.47
Reach 1	4342	25-YR	Prop	4560.00	624.25	628.78	627.26	629.20	0.005221	5.23	888.60	276.78	0.47
Reach 1	4342	100-YR	ExKlein	6708.00	624.25	629.70	628.06	630.22	0.004965	5.89	1189.46	387.20	0.48
Reach 1	4342	100-YR	Prop	6708.00	624.25	629.71	628.06	630.22	0.004926	5.87	1192.77	388.21	0.48
Reach 1	4129	25-YR	ExKlein	4560.00	623.72	627.82		628.16	0.004684	4.72	971.85	301.23	0.44
Reach 1	4129	25-YR	Prop	4560.00	623.72	627.72		628.08	0.005131	4.86	943.23	290.36	0.46
Reach 1	4129	100-YR	ExKlein	6708.00	623.72	628.76		629.19	0.004480	5.34	1282.12	347.77	0.45
Reach 1	4129	100-YR	Prop	6708.00	623.72	628.78		629.21	0.004390	5.31	1291.04	350.32	0.44
Reach 1	3916	25-YR	ExKlein	4560.00	622.77	627.26	625.00	627.45	0.002204	3.47	1312.77	333.48	0.31
Reach 1	3916	25-YR	Prop	4560.00	622.77	627.08	625.00	627.29	0.002558	3.64	1251.40	330.85	0.33
Reach 1	3916	100-YR	ExKlein	6708.00	622.77	628.13	625.56	628.40	0.002768	4.14	1621.80	387.82	0.35
Reach 1	3916	100-YR	Prop	6708.00	622.77	628.18	625.56	628.44	0.002685	4.09	1638.60	389.60	0.35
Reach 1	3712	25-YR	ExKlein	4560.00	622.11	626.91	624.23	627.06	0.001609	3.11	1466.17	347.00	0.27
Reach 1	3712	25-YR	Prop	4560.00	622.11	626.65	624.23	626.82	0.001958	3.31	1377.01	343.76	0.29
Reach 1	3712	100-YR	ExKlein	6708.00	622.11	627.67	624.79	627.91	0.002046	3.87	1734.71	354.45	0.31
Reach 1	3712	100-YR	Prop	6708.00	622.11	627.73	624.79	627.96	0.001971	3.82	1756.38	355.53	0.30

HEC-RAS River: River 1 Reach: Reach 1 (Continued)

Reach	River Sta	Profile	Plan	Q Total	Min Ch El	W.S. Elev	Crit W.S.	E.G. Elev	E.G. Slope	Vel Chnl	Flow Area	Top Width	Froude # Chl
				(cfs)	(ft)	(ft)	(ft)	(ft)	(ft/ft)	(ft/s)	(sq ft)	(ft)	
Reach 1	3558	25-YR	ExKlein	4560.00	621.94	626.58		626.77	0.002147	3.46	1317.51	386.26	0.31
Reach 1	3558	25-YR	Prop	4713.10	621.94	626.19		626.44	0.003104	3.96	1190.90	354.65	0.36
Reach 1	3558	100-YR	ExKlein	6708.00	621.94	627.23		627.52	0.003060	4.31	1581.01	579.63	0.37
Reach 1	3558	100-YR	Prop	6891.70	621.94	627.28		627.58	0.003106	4.37	1605.35	586.26	0.37
Reach 1	3472	25-YR	ExKlein	4560.00	621.51	626.44		626.60	0.001663	3.16	1443.01	368.22	0.27
Reach 1	3472	25-YR	Prop	4713.10	621.51	625.97		626.18	0.002576	3.67	1283.71	337.35	0.33
Reach 1	3472	100-YR	ExKlein	6708.00	621.51	627.02		627.28	0.002407	4.09	1641.68	476.23	0.33
Reach 1	3472	100-YR	Prop	6891.70	621.51	627.06		627.33	0.002469	4.16	1657.18	486.96	0.34
Reach 1	3414	25-YR	ExKlein	4560.00	619.75	626.27	624.48	626.46	0.002834	3.62	1311.30	509.57	0.34
Reach 1	3414	25-YR	Prop	4713.10	619.75	625.48	624.24	625.94	0.003146	5.47	861.70	471.74	0.52
Reach 1	3414	100-YR	ExKlein	6708.00	619.75	626.82	625.07	627.10	0.003410	4.38	1613.00	583.46	0.39
Reach 1	3414	100-YR	Prop	6891.70	619.75	626.48	624.89	627.08	0.002906	6.22	1108.39	531.30	0.52
Reach 1	3413			Culvert									
Reach 1	3345	25-YR	ExKlein	4560.00	618.34	624.32		624.76	0.011820	6.06	914.14	536.10	0.67
Reach 1	3345	100-YR	ExKlein	6708.00	618.34	624.92		625.43	0.010946	6.71	1263.52	619.21	0.66
Reach 1	3335	25-YR	Prop	4811.40	618.34	624.18	624.18	625.39	0.011209	9.49	605.95	521.66	0.95
Reach 1	3335	100-YR	Prop	7000.20	618.34	624.78	624.49	625.58	0.007369	8.66	1240.68	608.89	0.80
Reach 1	3242	25-YR	ExKlein	4560.00	618.67	623.84		624.04	0.004318	4.00	1321.93	593.78	0.41
Reach 1	3242	25-YR	Prop	4811.40	618.67	623.92		624.13	0.004314	4.07	1370.50	599.26	0.41
Reach 1	3242	100-YR	ExKlein	6708.00	618.67	624.47		624.72	0.004324	4.55	1708.87	633.58	0.43
Reach 1	3242	100-YR	Prop	7000.20	618.67	624.55		624.81	0.004317	4.61	1758.04	637.13	0.43
Reach 1	3058	25-YR	ExKlein	4560.00	618.62	623.10		623.31	0.004891	4.33	1270.89	605.44	0.44
Reach 1	3058	25-YR	Prop	4811.40	618.62	623.19		623.41	0.004826	4.39	1325.25	613.72	0.44
Reach 1	3058	100-YR	ExKlein	6708.00	618.62	623.79		624.04	0.004403	4.71	1710.18	662.06	0.43
Reach 1	3058	100-YR	Prop	7000.20	618.62	623.87		624.13	0.004352	4.76	1765.85	666.55	0.43
Reach 1	2829	25-YR	ExKlein	4560.00	615.99	622.62		622.80	0.001991	4.24	1473.82	584.18	0.30
Reach 1	2829	25-YR	Prop	4811.40	615.99	622.71		622.89	0.002016	4.31	1525.56	593.13	0.30
Reach 1	2829	100-YR	ExKlein	6708.00	615.99	623.31		623.54	0.002134	4.71	1899.85	650.37	0.32
Reach 1	2829	100-YR	Prop	7000.20	615.99	623.40		623.63	0.002146	4.76	1955.40	658.44	0.32
Reach 1	2590	25-YR	ExKlein	4560.00	616.98	621.74		622.10	0.010643	4.80	949.59	483.41	0.60
Reach 1	2590	25-YR	Prop	4811.40	616.98	621.83		622.19	0.010355	4.85	991.78	487.11	0.60

HEC-RAS River: River 1 Reach: Reach 1 (Continued)

Reach	River Sta	Profile	Plan	Q Total	Min Ch El	W.S. Elev	Crit W.S.	E.G. Elev	E.G. Slope	Vel Chnl	Flow Area	Top Width	Froude # Chl
				(cfs)	(ft)	(ft)	(ft)	(ft)	(ft/ft)	(ft/s)	(sq ft)	(ft)	
Reach 1	2590	100-YR	ExKlein	6708.00	616.98	622.42		622.84	0.009482	5.18	1295.36	540.05	0.59
Reach 1	2590	100-YR	Prop	7000.20	616.98	622.50		622.93	0.009423	5.22	1340.55	549.39	0.59
Reach 1	2464	25-YR	ExKlein	4560.00	615.02	621.51		621.69	0.001638	2.82	1399.94	562.71	0.26
Reach 1	2464	25-YR	Prop	4811.40	615.02	621.59		621.79	0.001647	2.88	1449.76	569.45	0.26
Reach 1	2464	100-YR	ExKlein	6708.00	615.02	622.18		622.43	0.001730	3.25	1797.07	616.29	0.28
Reach 1	2464	100-YR	Prop	7000.20	615.02	622.26		622.52	0.001740	3.30	1847.48	620.92	0.28
Reach 1	2296	25-YR	ExKlein	4560.00	616.62	621.17	620.00	621.39	0.002001	2.74	1290.16	562.79	0.28
Reach 1	2296	25-YR	Prop	4811.40	616.62	621.25	620.06	621.49	0.002001	2.79	1338.97	572.37	0.28

DESIGN

INTERIM REVIEW

DOCUMENT INCOMPLETE. NOT INTENDED FOR PERMIT, BIDDING OR CONSTRUCTION.
ENGINEER: TYLER PAYNE DUBE
P.E. SERIAL NO: 118612
DATE: 1/9/2020

APPROVAL

INTERIM REVIEW

DOCUMENT INCOMPLETE. NOT INTENDED FOR PERMIT, BIDDING OR CONSTRUCTION.
ENGINEER: JOHN A. TYLER
P.E. SERIAL NO: 105193
DATE: 1/9/2020

REV. NO.	DATE	DESCRIPTION	BY

PAPE-DAWSON ENGINEERS
SAN ANTONIO | AUSTIN | HOUSTON | FORT WORTH | DALLAS
2000 NW LOOP 410 | SAN ANTONIO, TX 78213 | 210.375.9000
TBPE FIRM REGISTRATION #470 | TBPLS FIRM REGISTRATION #10028800

City of New Braunfels

KLEIN RD PHASE 2

HYDRAULIC DATA SHEETS

SHEET 2 OF 2

DGN:	STATE	PROJECT NO.	ROADWAY
CHK DGN:	TEXAS	NB 18-026	KLEIN RD
DWG:	COUNTY	CITY	SHEET NO.
CHK DWG:	GUADALUPE	NEW BRAUNFELS	195

Plotted on: 1/9/2020

Design Filename: H:\Projects\510\30\03\Design\Civil\Drainage\5103003_WKleinRd_HYDDATA.dgn

Plotted on: 1/9/2020

Design Filename: H:\Projects\510\30\03\Design\Civil\Drainage\5103003_WKleinRd_DA01.dgn

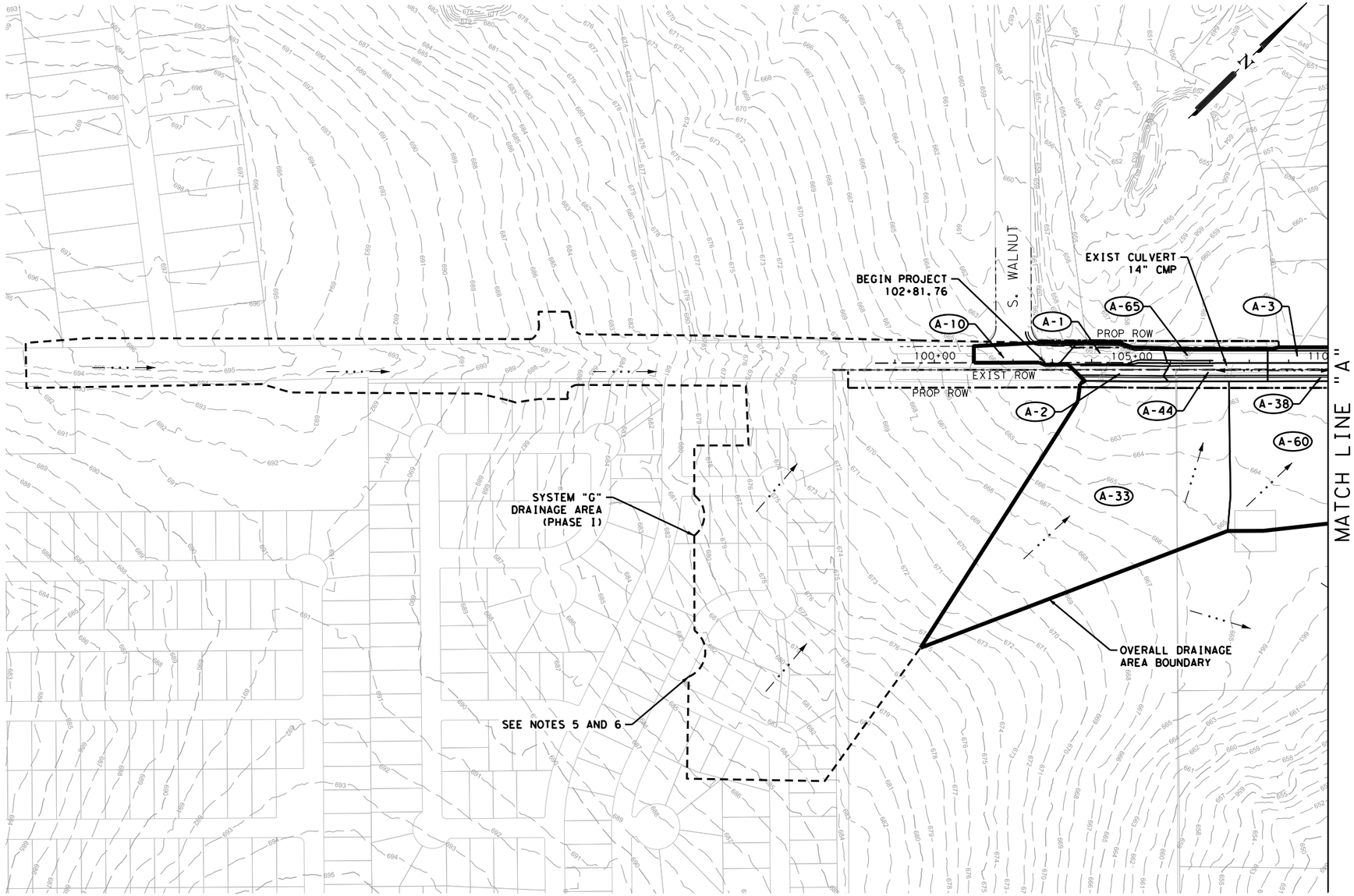

LEGEND

- R.O.W.
- DRAINAGE AREA BOUNDARY
- 801 EXISTING 1' CONTOUR
- 850 EXISTING 5' CONTOUR
- SYSTEM "G" DRAINAGE AREA BOUNDARY
- (X-X) INTERIOR DRAINAGE AREA
- 100-YR FLOODPLAIN
- FLOW ARROW

NOTES

1. DRAINAGE AREAS OUTSIDE OF ROW WERE DELINEATED USING 0.5-FT RESOLUTION ORTHOPHOTOGRAPHY FOR GUADALUPE COUNTY (2013, P2 ENERGY SOLUTIONS), OBTAINED FROM TEXAS NATURAL RESOURCES INFORMATION SYSTEM.
2. C-VALUES FOR AREAS OUTSIDE OF ROW INTERPRETED FROM CITY OF SAN ANTONIO UNIFIED DEVELOPMENT CODE (TABLE 5.5.3A, VERSION 2/27/2019) FOR CITY OF NEW BRAUNFELS ZONING (8/12/2019)
3. DESIGN FLOWS WERE DEVELOPED FOR THE 25-YR DESIGN STORM AND 100-YR CHECK STORM EVENTS USING POINT PRECIPITATION FREQUENCY ESTIMATES PUBLISHED BY THE NOAA ATLAS 14, VOLUME 11, VERSION 2. LATITUDE: 29.6621° LONGITUDE: -98.0981°
4. DRAINAGE AREA FLOWS DEVELOPED ASSUMING ULTIMATE CONDITION BASED ON CITY OF NEW BRAUNFELS ZONING MAP (8/12/2019).
5. DRAINAGE AREA FOR SYSTEM "G" TAKEN FROM CITY OF NEW BRAUNFELS W. KLEIN RD RECONSTRUCTION PROJECT F.M. 1044 TO WALNUT AVE. 100% PLANS (NOVEMBER 2017) PREPARED BY TRIHYDRO CORPORATION.
6. DESIGN FLOW FOR SYSTEM "G" TAKEN FROM WEST KLEIN ROAD RECONSTRUCTION PROJECT FINAL DRAINAGE REPORT (06/29/2018) PREPARED BY TRIHYDRO CORPORATION.

DESIGN

INTERIM REVIEW
DOCUMENT INCOMPLETE. NOT INTENDED FOR PERMIT, BIDDING OR CONSTRUCTION.
ENGINEER: TYLER PAYNE DUBE
P.E. SERIAL NO: 118612
DATE: 1/9/2020

APPROVAL

INTERIM REVIEW
DOCUMENT INCOMPLETE. NOT INTENDED FOR PERMIT, BIDDING OR CONSTRUCTION.
ENGINEER: JOHN A. TYLER
P.E. SERIAL NO: 105193
DATE: 1/9/2020

0 60 150 300 600

SCALE: PLAN 1"= 300'

REV. NO.	DATE	DESCRIPTION	BY

PAPE-DAWSON ENGINEERS
SAN ANTONIO | AUSTIN | HOUSTON | FORT WORTH | DALLAS
2000 NW LOOP 410 | SAN ANTONIO, TX 78213 | 210.375.9000
TBPE FIRM REGISTRATION #470 | TBPLS FIRM REGISTRATION #10028800

City of New Braunfels

KLEIN RD PHASE 2

DRAINAGE AREA MAP SYSTEM A

SHEET 1 OF 3

DGN:	STATE	PROJECT NO.	ROADWAY
CHK DGN:	TEXAS	NB 18-026	KLEIN RD
DWG:	COUNTY	CITY	SHEET NO.
CHK DWG:	GUADALUPE	NEW BRAUNFELS	196

Plotted on: 1/9/2020

Design Filename: H:\Projects\510\30\03\Design\Civil\Drainage\5103003_WKleinRd_DA02.dgn

RUNOFF COMPUTATIONS - RATIONAL METHOD								
AREA - ID	AREA (AC)	C (COMPOSITE)	TOTAL CA	Tc (MIN)	FREQ. (YR)	I_{25} (IN/HR)	Q_{25} (CFS)	TO INLET/JUNCTION
A1	0.279	0.90	0.25	10	25	8.94	2.2	CI-A1
A10	0.269	0.90	0.24	10	25	8.94	2.2	CI-A10
A11	0.328	0.90	0.30	10	25	8.94	2.6	CI-A11
A12	0.367	0.80	0.29	10	25	8.94	2.6	CI-A12
A13	0.294	0.90	0.26	10	25	8.94	2.4	CI-A13
A14	0.382	0.88	0.34	10	25	8.94	3.0	CI-A14
A15	0.486	0.73	0.35	10	25	8.94	3.2	CI-A15
A17	0.656	0.72	0.47	10	25	8.94	4.2	CI-A17
A18	0.456	0.87	0.40	10	25	8.94	3.6	CI-A18
A19	0.224	0.80	0.18	10	25	8.94	1.6	CI-A19
A2	0.231	0.90	0.21	10	25	8.94	1.9	CI-A2
A20	0.161	0.90	0.14	10	25	8.94	1.3	CI-A20
A3	0.225	0.90	0.20	10	25	8.94	1.8	CI-A3
A33	6.158	0.61	3.75	10	25	8.94	33.5	AD-A33
A37	0.367	0.90	0.33	10	25	8.94	3.0	CI-A37
A38	0.263	0.90	0.24	10	25	8.94	2.1	CI-A38
A39	0.190	0.65	0.12	10	25	8.94	1.1	A39
A41	0.213	0.90	0.19	10	25	8.94	1.7	CI-A41
A42	0.371	0.90	0.33	10	25	8.94	3.0	CI-A42
A44	0.271	0.90	0.24	10	25	8.94	2.2	CI-A44
A5	0.185	0.90	0.17	10	25	8.94	1.5	CI-A5
A60	3.538	0.46	1.63	10	25	8.94	14.6	AD-A60
A62	4.738	0.44	2.08	10	25	8.94	18.6	AD-A62
A63	0.365	0.74	0.27	10	25	8.94	2.4	CI-A63
A65	0.226	0.90	0.20	10	25	8.94	1.8	CI-A65
A7	0.318	0.90	0.29	10	25	8.94	2.6	CI-A7
A9	0.239	0.90	0.22	10	25	8.94	1.9	CI-A9

LEGEND

- R.O.W.
- DRAINAGE AREA BOUNDARY
- 801 EXISTING 1' CONTOUR
- 850 EXISTING 5' CONTOUR
- SYSTEM "G" DRAINAGE AREA BOUNDARY
- (X-X) INTERIOR DRAINAGE AREA
- 100-YR FLOODPLAIN
- FLOW ARROW

NOTES

1. DRAINAGE AREAS OUTSIDE OF ROW WERE DELINEATED USING 0.5-FT RESOLUTION ORTHOPHOTOGRAPHY FOR GUADALUPE COUNTY (2013, P2 ENERGY SOLUTIONS), OBTAINED FROM TEXAS NATURAL RESOURCES INFORMATION SYSTEM.
2. C-VALUES FOR AREAS OUTSIDE OF ROW INTERPRETED FROM CITY OF SAN ANTONIO UNIFIED DEVELOPMENT CODE (TABLE 5.5.3A, VERSION 2/27/2019) FOR CITY OF NEW BRAUNFELS ZONING (8/12/2019)
3. DESIGN FLOWS WERE DEVELOPED FOR THE 25-YR DESIGN STORM AND 100-YR CHECK STORM EVENTS USING POINT PRECIPITATION FREQUENCY ESTIMATES PUBLISHED BY THE NOAA ATLAS 14, VOLUME 11, VERSION 2. LATITUDE: 29.6621° LONGITUDE: -98.0981°
4. DRAINAGE AREA FLOWS DEVELOPED ASSUMING ULTIMATE CONDITION BASED ON CITY OF NEW BRAUNFELS ZONING MAP (8/12/2019).
5. DRAINAGE AREA FOR SYSTEM "G" TAKEN FROM CITY OF NEW BRAUNFELS W. KLEIN RD RECONSTRUCTION PROJECT F.M. 1044 TO WALNUT AVE. 100% PLANS (NOVEMBER 2017) PREPARED BY TRIHYDRO CORPORATION.
6. DESIGN FLOW FOR SYSTEM "G" TAKEN FROM WEST KLEIN ROAD RECONSTRUCTION PROJECT FINAL DRAINAGE REPORT (06/29/2018) PREPARED BY TRIHYDRO CORPORATION.

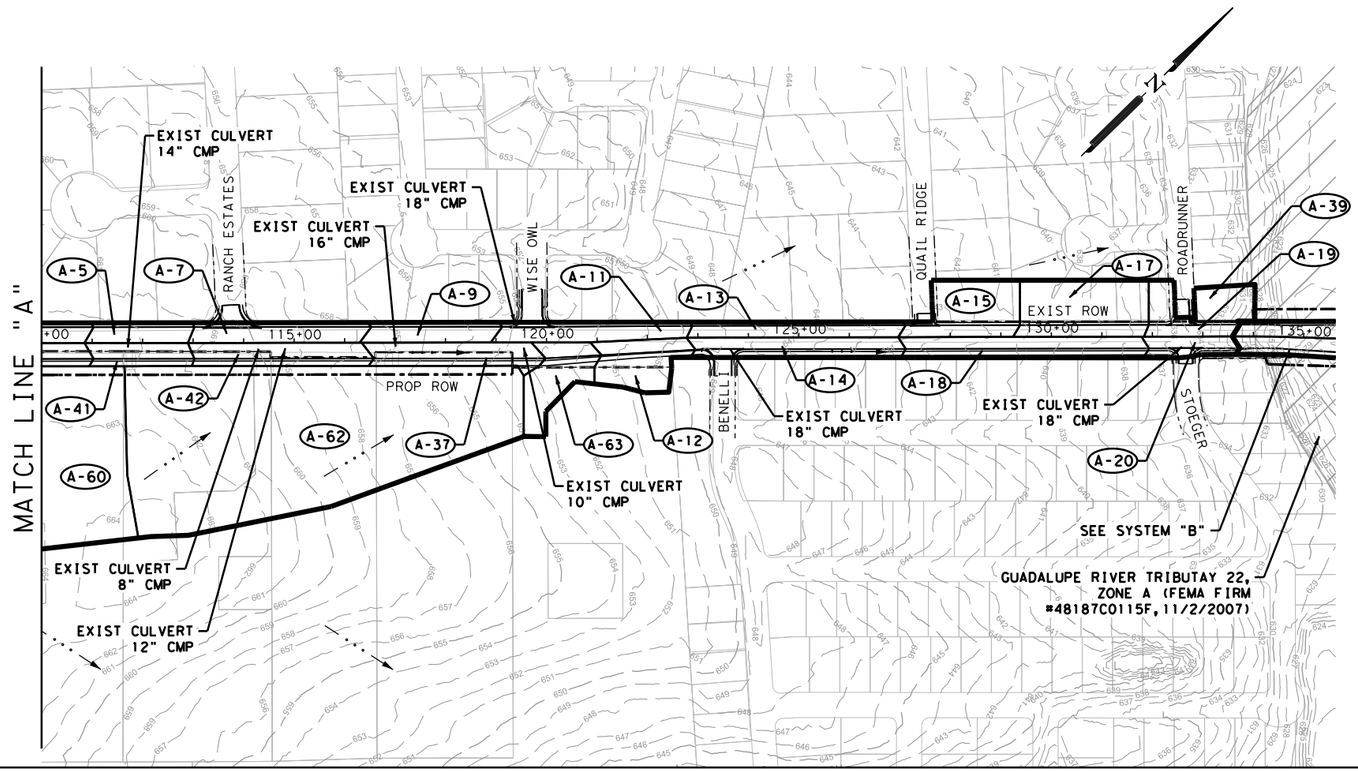

DESIGN

INTERIM REVIEW

DOCUMENT INCOMPLETE. NOT INTENDED FOR PERMIT, BIDDING OR CONSTRUCTION.
ENGINEER: TYLER PAYNE DUBE
P.E. SERIAL NO: 118612
DATE: 1/9/2020

APPROVAL

INTERIM REVIEW

DOCUMENT INCOMPLETE. NOT INTENDED FOR PERMIT, BIDDING OR CONSTRUCTION.
ENGINEER: JOHN A. TYLER
P.E. SERIAL NO: 105193
DATE: 1/9/2020

0 60 150 300 600

SCALE: PLAN 1"= 300'

REV. NO.	DATE	DESCRIPTION	BY

PAPE-DAWSON ENGINEERS
SAN ANTONIO | AUSTIN | HOUSTON | FORT WORTH | DALLAS
2000 NW LOOP 410 | SAN ANTONIO, TX 78213 | 210.375.9000
TBPE FIRM REGISTRATION #470 | TBPLS FIRM REGISTRATION #10028800

City of New Braunfels

KLEIN RD PHASE 2

DRAINAGE AREA MAP SYSTEM A

SHEET 2 OF 3

DGN:	STATE	PROJECT NO.	ROADWAY
CHK DGN:	TEXAS	NB 18-026	KLEIN RD
DWG:	COUNTY	CITY	SHEET NO.
CHK DWG:	GUADALUPE	NEW BRAUNFELS	197

Plotted on: 1/9/2020

Design Filename: H:\Projects\5103003\Design\Civil\Drainage\5103003_WKleinRd_DA03.dgn

RUNOFF COMPUTATIONS - RATIONAL METHOD								
AREA - ID	AREA (AC)	C (COMPOSITE)	TOTAL CA	Tc (MIN)	FREQ. (YR)	I_{25} (IN/HR)	Q_{25} (CFS)	TO INLET/JUNCTION
B1	0.290	0.90	0.26	10	25	8.94	2.3	CI-B1
B10	0.545	0.90	0.49	10	25	8.94	4.4	CI-B10
B11	0.494	0.90	0.44	10	25	8.94	4.0	CI-B11
B2	0.333	0.90	0.30	10	25	8.94	2.7	CI-B2
B20	0.246	0.90	0.22	10	25	8.94	2.0	CI-B20
B21	0.267	0.90	0.24	10	25	8.94	2.2	CI-B21
B22	0.158	0.90	0.14	10	25	8.94	1.3	CI-B22
B26	9.700	0.90	8.73	10	25	8.94	78.0	EX PIPE INLET
B27	0.583	0.65	0.38	10	25	8.94	3.4	AD-B27
B28	0.615	0.90	0.55	10	25	8.94	4.9	CI-B28
B3	0.306	0.90	0.28	10	25	8.94	2.5	CI-B3
B4	0.377	0.90	0.34	10	25	8.94	3.0	CI-B4
B5	0.354	0.87	0.31	10	25	8.94	2.7	CI-B5
B6	0.221	0.90	0.20	10	25	8.94	1.8	CI-B6
B7	0.001	0.90	0.00	10	25	8.94	0.0	AD-B7
B8	0.380	0.90	0.34	10	25	8.94	3.1	CI-B8
B9	0.379	0.90	0.34	10	25	8.94	3.0	CI-B9

LEGEND

- R.O.W.
- DRAINAGE AREA BOUNDARY
- 801 EXISTING 1' CONTOUR
- 850 EXISTING 5' CONTOUR
- SYSTEM "G" DRAINAGE AREA BOUNDARY
- (X-X) INTERIOR DRAINAGE AREA
- 100-YR FLOODPLAIN
- FLOW ARROW

NOTES

1. DRAINAGE AREAS OUTSIDE OF ROW WERE DELINEATED USING 0.5-FT RESOLUTION ORTHOPHOTOGRAPHY FOR GUADALUPE COUNTY (2013, P2 ENERGY SOLUTIONS), OBTAINED FROM TEXAS NATURAL RESOURCES INFORMATION SYSTEM.
2. C-VALUES FOR AREAS OUTSIDE OF ROW INTERPRETED FROM CITY OF SAN ANTONIO UNIFIED DEVELOPMENT CODE (TABLE 5.5.3A, VERSION 2/27/2019) FOR CITY OF NEW BRAUNFELS ZONING (8/12/2019)
3. DESIGN FLOWS WERE DEVELOPED FOR THE 25-YR DESIGN STORM AND 100-YR CHECK STORM EVENTS USING POINT PRECIPITATION FREQUENCY ESTIMATES PUBLISHED BY THE NOAA ATLAS 14, VOLUME 11, VERSION 2. LATITUDE: 29.6621° LONGITUDE: -98.0981°
4. DRAINAGE AREA FLOWS DEVELOPED ASSUMING ULTIMATE CONDITION BASED ON CITY OF NEW BRAUNFELS ZONING MAP (8/12/2019).
5. DRAINAGE AREA FOR SYSTEM "G" TAKEN FROM CITY OF NEW BRAUNFELS W. KLEIN RD RECONSTRUCTION PROJECT F.M. 1044 TO WALNUT AVE. 100% PLANS (NOVEMBER 2017) PREPARED BY TRIHYDRO CORPORATION.
6. DESIGN FLOW FOR SYSTEM "G" TAKEN FROM WEST KLEIN ROAD RECONSTRUCTION PROJECT FINAL DRAINAGE REPORT (06/29/2018) PREPARED BY TRIHYDRO CORPORATION.

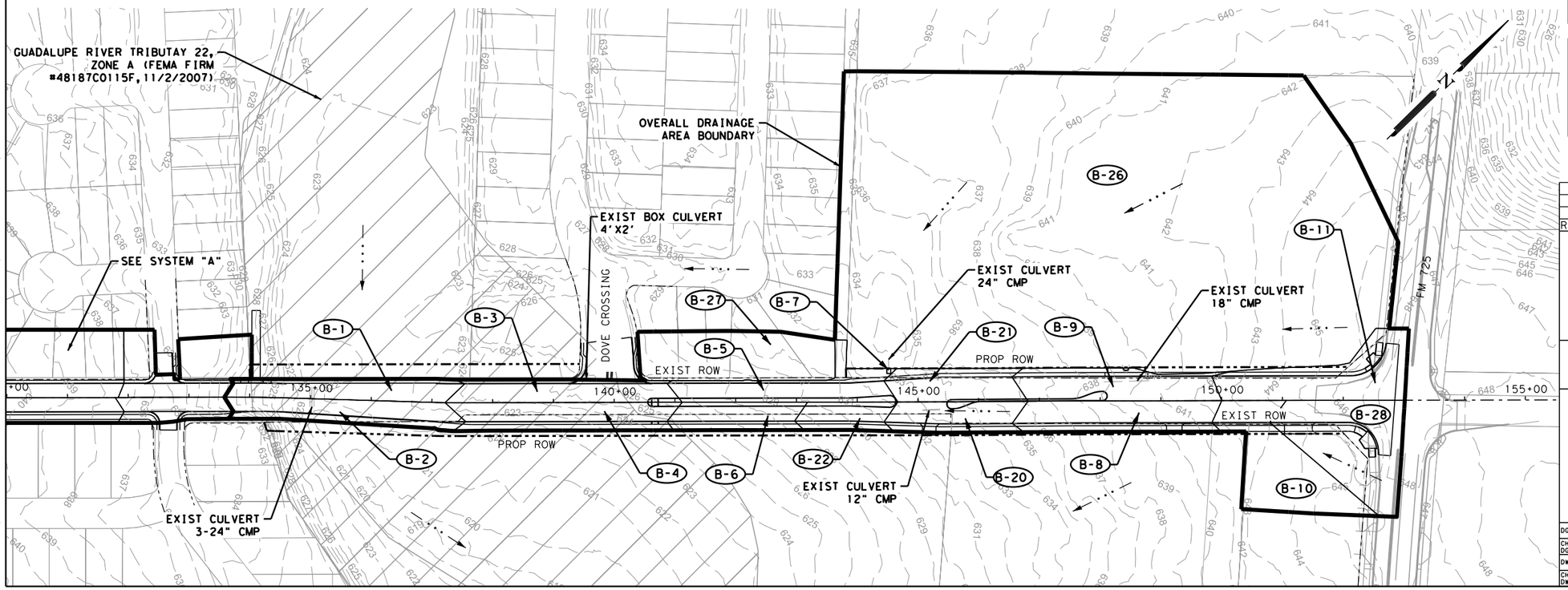

DESIGN

INTERIM REVIEW

DOCUMENT INCOMPLETE. NOT INTENDED FOR PERMIT, BIDDING OR CONSTRUCTION.
ENGINEER: TYLER PAYNE DUBE
P.E. SERIAL NO: 118612
DATE: 1/9/2020

APPROVAL

INTERIM REVIEW

DOCUMENT INCOMPLETE. NOT INTENDED FOR PERMIT, BIDDING OR CONSTRUCTION.
ENGINEER: JOHN A. TYLER
P.E. SERIAL NO: 105193
DATE: 1/9/2020

0 100 200 300

SCALE: PLAN 1"= 200'

REV. NO.	DATE	DESCRIPTION	BY

PAPE-DAWSON ENGINEERS
SAN ANTONIO | AUSTIN | HOUSTON | FORT WORTH | DALLAS
2000 NW LOOP 410 | SAN ANTONIO, TX 78213 | 210.375.9000
TBPE FIRM REGISTRATION #470 | TBPLS FIRM REGISTRATION #10028800

City of New Braunfels

KLEIN RD PHASE 2

DRAINAGE AREA MAP SYSTEM B

SHEET 3 OF 3

DGN:	STATE	PROJECT NO.	ROADWAY
CHK DGN:	TEXAS	NB 18-026	KLEIN RD
DWG:	COUNTY	CITY	SHEET NO.
CHK DWG:	GUADALUPE	NEW BRAUNFELS	198

RUNOFF COMPUTATIONS AND DITCH ANALYSIS COMPUTATIONS - RATIONAL METHOD

CHANNEL NAME	DRN AREA (AC)	C	T_c (MIN)	INTENSITIES (IN/HR)		FLOW (CFS)		BOTTOM WIDTH	CHANNEL DEPTH	CHANNEL SLOPE	FORESLOPE	BACKSLOPE	N VALUE	CHANNEL FLOW DEPTH		CROSS SECTIONAL AREA		VELOCITIES	
				I_{25}	I_{100}	Q_{25}	Q_{100}	FT	FT	%	H:1V	H:1V		FT (25YR)	FT (100YR)	SQ FT (25YR)	SQ FT (100YR)	FT/S (25YR)	FT/S (100YR)
A1 (STA 105+80)	4.20	0.65	10.0	8.94	11.46	24.41	31.29	5	1.50	0.60%	6	4	0.035	1.03	1.17	9.45	11.34	2.58	2.76
A2 (STA 105+88)	2.00	0.44	10.0	8.94	11.46	7.87	10.08	5	1.50	1.40%	6	4	0.035	0.46	0.52	3.15	3.72	2.50	2.71
A3 (STA 110+94)	2.75	0.44	10.0	8.94	11.46	10.82	13.87	5	1.00	0.50%	6	6	0.035	0.67	0.76	6.06	7.26	1.79	1.91
A4 (STA 111+06)	0.80	0.44	10.0	8.94	11.46	3.15	4.03	5	1.00	1.40%	6	6	0.035	0.27	0.31	1.78	2.12	1.77	1.90
A5 (STA 114+33)	1.00	0.44	10.0	8.94	11.46	3.93	5.04	5	0.42	1.30%	6	6	0.035	0.31	0.35	2.12	2.51	1.86	2.01
A6 (STA 114+74)	1.00	0.44	10.0	8.94	11.46	3.93	5.04	0	0.42	1.30%	20	20	0.015	0.26	0.29	1.40	1.67	2.81	3.02
A7 (STA 116+80)	2.25	0.44	10.0	8.94	11.46	8.85	11.35	5	0.50	1.30%	6	6	0.035	0.48	0.54	3.73	4.44	2.37	2.56
A8 (STA 116+94)	2.25	0.44	10.0	8.94	11.46	8.85	11.35	0	0.42	1.30%	20	20	0.015	0.36	0.39	2.56	3.07	3.46	3.70
A9 (STA 118+97)	3.90	0.44	10.0	8.94	11.46	15.34	19.67	5	1.00	1.30%	6	6	0.035	0.63	0.72	5.56	6.65	2.76	2.96
A10 (STA 119+13)	0.90	0.44	10.0	8.94	11.46	3.54	4.54	0	0.67	0.50%	3	3	0.015	0.62	0.68	1.16	1.39	3.05	3.26

CURB INLET COMPUTATIONS

INLET NO	INLET OFFSET (FT)		INLET CHAIN	INLET STATION	CURB INLET CONFIGURATION	INLET TYPE	DRAINAGE AREA NO	Q FROM AREA (CFS)	CARRY OVER FLOW (CFS)	TOTAL Q (CFS)	CURB INLET ON GRADE: ROAD GRADE (FT/FT)	CURB INLET ON GRADE: DEPTH OF FLOW (FT)	CURB INLET ON GRADE: PONDED WIDTH (FT)	CURB INLET IN SAG: DEPTH OF FLOW (FT)	CURB INLET IN SAG: PONDED WIDTH (LEFT) (FT)	CURB INLET IN SAG: PONDED WIDTH (RIGHT) (FT)	ALLOW PONDED WIDTH (FT)	INLET LENGTH REQUIRED (FT)	INLET LENGTH (FT)	BY PASS FLOW (CFS)	BY PASS FLOW NODE
CI-A10	44.73	LT	KLEINCL	103+55.30	PCO10L-3x5	On Grade	A10	2.2	0.0	2.2	0.0070	0.20	10.08	---	---	---	12.00	10.73	9.5	0.1	A1
CI-A1	44.72	LT	KLEINCL	104+50.00	PCO10R-3x5	Sag	A1	2.2	0.4	2.6	---	---	---	0.23	7.05	11.08	12.00	---	9.5	---	---
CI-A2	32.73	RT	KLEINCL	104+50.00	PCO5-3x5	Sag	A2	1.9	0.0	1.9	---	---	---	0.22	8.02	8.35	12.00	---	5.0	---	---
CI-A44	32.59	RT	KLEINCL	105+85.00	PCO10L-3x5	On Grade	A44	2.2	0.0	2.2	0.0035	0.23	11.50	---	---	---	12.00	9.21	9.5	0.0	A2
CI-A65	32.73	LT	KLEINCL	105+85.00	PCO5-3x5	On Grade	A65	1.8	0.0	1.8	0.0035	0.22	10.74	---	---	---	12.00	8.31	5.0	0.4	A1
CI-A3	31.73	LT	KLEINCL	111+00.00	PCO10L-3x5	On Grade	A3	1.8	0.0	1.8	0.0040	0.21	10.45	---	---	---	12.00	8.53	9.5	0.0	A5
CI-A38	31.73	RT	KLEINCL	111+00.00	PCO10R-3x5	On Grade	A38	2.1	0.0	2.1	0.0040	0.22	11.08	---	---	---	12.00	9.32	9.5	0.0	A41
CI-A5	31.75	LT	KLEINCL	113+00.00	PCO5-3x5	On Grade	A5	1.5	0.0	1.5	0.0090	0.17	8.35	---	---	---	12.00	9.20	5.0	0.4	A7
CI-A41	31.73	RT	KLEINCL	113+00.00	PCO5-3x5	On Grade	A41	1.7	0.0	1.7	0.0090	0.18	8.80	---	---	---	12.00	9.96	5.0	0.5	A42
CI-A7	31.75	LT	KLEINCL	116+50.00	PCO10L-3x5	On Grade	A7	2.6	0.4	2.9	0.0140	0.20	9.89	---	---	---	12.00	14.87	9.5	0.5	A9
CI-A42	31.73	RT	KLEINCL	116+50.00	PCO15-3x5	On Grade	A42	3.0	0.5	3.5	0.0140	0.21	10.55	---	---	---	12.00	16.40	14.0	0.2	A37
CI-A9	31.75	LT	KLEINCL	119+10.00	PCO10L-3x5	On Grade	A9	1.9	0.5	2.4	0.0140	0.18	9.17	---	---	---	12.00	13.27	9.5	0.3	A11
CI-A37	31.73	RT	KLEINCL	119+90.00	PCO15-3x5	On Grade	A37	3.0	0.1	3.1	0.0110	0.21	10.54	---	---	---	12.00	14.47	14.0	0.1	A63
CI-A63	26.97	RT	KLEINCL	121+00.00	PCO15-3x5	On Grade	A63	2.4	0.0	2.4	0.0110	0.19	9.66	---	---	---	12.00	12.68	14.0	0.0	A12
CI-A11	23.80	LT	KLEINCL	122+87.00	PCO5-3x5	On Grade	A11	2.6	0.2	2.9	0.0110	0.21	10.30	---	---	---	12.00	13.98	5.0	1.3	A13
CI-A12	24.62	RT	KLEINCL	122+87.00	PCO15-3x5	On Grade	A12	2.6	0.0	2.6	0.0110	0.20	9.93	---	---	---	12.00	13.24	14.0	0.0	A14
CI-A13	23.73	LT	KLEINCL	127+03.00	PCO15-3x5	On Grade	A13	2.4	1.3	3.7	0.0138	0.22	10.80	---	---	---	12.00	16.86	14.0	0.2	A15
CI-A14	23.73	RT	KLEINCL	127+03.32	PCO15-3x5	On Grade	A14	3.0	0.0	3.0	0.0138	0.20	10.03	---	---	---	12.00	15.08	14.0	0.1	A18
CI-A15	23.73	LT	KLEINCL	129+30.00	PCO15-3x5	On Grade	A15	3.2	0.2	3.3	0.0138	0.21	10.42	---	---	---	12.00	15.96	14.0	0.1	A17
CI-A17	23.73	LT	KLEINCL	131+85.00	PCO15-3x5	On Grade	A17	4.2	0.1	4.3	0.0168	0.22	11.05	---	---	---	12.00	19.30	14.0	0.5	A19
CI-A18	23.75	RT	KLEINCL	131+85.00	PCO15-3x5	On Grade	A18	3.6	0.0	3.6	0.0168	0.21	10.32	---	---	---	12.00	17.40	14.0	0.2	A20
CI-A19	23.73	LT	KLEINCL	133+65.00	PCO15-3x5	On Grade	A19	1.6	0.4	2.0	0.0100	0.18	9.18	---	---	---	12.00	11.20	14.0	0.0	---
CI-A20	23.75	RT	KLEINCL	133+65.00	PCO15-3x5	On Grade	A20	1.3	0.2	1.5	0.0100	0.16	8.18	---	---	---	12.00	9.41	14.0	0.0	---

NOTE: CURB INLETS AND AREA ZONE DRAIN INLETS IN SAG CONDITION WERE ANALYZED USING A 50% CLOGGING FACTOR

AREA ZONE DRAIN INLET COMPUTATIONS

INLET NO	INLET OFFSET (FT)		INLET CHAIN	INLET STATION	DRAINAGE AREA NO	TOTAL Q (CFS)	INLET HEAD (FT)	REQ'D AREA (FT^2)	INLET AREA (FT^2)	INLET DESCRIPTION
AD-A21	54.80	RT	KLEINCL	103+22.93	---	35.3*	1.80	9.36	10.0	PAZD RC 5x5
AD-A33	55.50	RT	KLEINCL	105+85.00	A33	33.5	0.58	15.64	10.0	PAZD RC 5x5
AD-A60	54.50	RT	KLEINCL	111+00.00	A60	14.6	0.68	6.31	10.0	PAZD RC 5x5
AD-A62	54.50	RT	KLEINCL	119+10.00	A62	18.6	0.86	7.16	10.0	PAZD RC 5x5

* DESIGN FLOW FOR INLET AD-A21 TAKEN FROM WEST KLEIN ROAD RECONSTRUCTION PROJECT FINAL DRAINAGE REPORT (06/29/2018) PREPARED BY TRIHYDRO CORPORATION.

INTERIM REVIEW

DOCUMENT INCOMPLETE. NOT INTENDED FOR PERMIT, BIDDING OR CONSTRUCTION.
ENGINEER: TYLER PAYNE DUBE
P.E. SERIAL NO: 118612
DATE: 1/9/2020

INTERIM REVIEW

DOCUMENT INCOMPLETE. NOT INTENDED FOR PERMIT, BIDDING OR CONSTRUCTION.
ENGINEER: JOHN A. TYLER
P.E. SERIAL NO: 105193
DATE: 1/9/2020

REV. NO.	DATE	DESCRIPTION	BY

PAPE-DAWSON ENGINEERS
SAN ANTONIO | AUSTIN | HOUSTON | FORT WORTH | DALLAS
2000 NW LOOP 410 | SAN ANTONIO, TX 78213 | 210.375.9000
TBPE FIRM REGISTRATION #470 | TBPLS FIRM REGISTRATION #10028800

City of New Braunfels

KLEIN RD PHASE 2

STORM DRAIN COMPUTATION SYSTEM A

SHEET 1 OF 3

DGN:	STATE	PROJECT NO.	ROADWAY
CHK DGN:	TEXAS	NB 18-026	KLEIN RD
DWG:	COUNTY	CITY	SHEET NO.
CHK DWG:	GUADALUPE	NEW BRAUNFELS	199

Plotted on: 1/9/2020

Design Filename: H:\Projects\510\30\03\Design\Civil\Drainage\5103003_WKleinRd_HDS04.dgn

STORM SEWER COMPUTATIONS

LINE NO	FROM NODE	TO NODE	STRUCTURE SIZE	LENGTH (FT)	T_c (MIN)	FREQ. (YRS)	I_{25} (in/hr)	Q_{25} (CFS)	CAP (CFS)	SLOPE %	VEL (FT/SEC)	INVERT UPSTREAM (FT)	INVERT DOWNSTREAM (FT)	MANNING'S N VALUE
LINE A1	MH-A35	MH-A67	1 - 5'S x 2'H Box Culv	24.08	10.42	25	8.79	61.4	85.5	0.50	7.8	655.9	655.7	0.013
LINE A1	MH-A67	MH-A22	1 - 5'S x 2'H Box Culv	87.15	11.41	25	8.45	63.5	85.5	0.50	7.9	655.6	655.2	0.013
LINE A1	MH-A22	MH-A66	1 - 5'S x 2'H Box Culv	126.96	11.76	25	8.33	67.7	85.5	0.50	8.1	655.1	654.5	0.013
LINE A1	MH-A66	MH-A23	1 - 5'S x 3'H Box Culv	506.91	12.74	25	8.02	102.2	147.1	0.50	9.0	653.4	650.8	0.013
LINE A1	MH-A23	MH-A24	1 - 5'S x 3'H Box Culv	192.00	13.09	25	7.91	117.4	147.1	0.50	9.4	650.7	649.8	0.013
LINE A1	MH-A24	MH-A50	1 - 5'S x 3'H Box Culv	342.00	13.71	25	7.74	118.6	147.1	0.50	9.5	649.7	648.0	0.013
LINE A1	MH-A50	MH-A26	1 - 5'S x 3'H Box Culv	252.00	14.11	25	7.63	122.4	197.3	0.90	11.7	647.9	645.6	0.013
LINE A1	MH-A26	MH-A34	1 - 5'S x 3'H Box Culv	72.00	14.23	25	7.60	139.3	174.1	0.70	10.9	645.3	644.8	0.013
LINE A1	MH-A34	MH-A25	1 - 5'S x 3'H Box Culv	101.53	14.40	25	7.56	141.6	174.1	0.70	11.0	644.2	643.5	0.013
LINE A1	MH-A25	MH-A27	1 - 5'S x 3'H Box Culv	179.19	14.67	25	7.48	143.2	174.1	0.70	11.1	642.7	641.4	0.013
LINE A1	MH-A27	MH-A28	1 - 5'S x 3'H Box Culv	408.41	15.24	25	7.34	145.7	197.4	0.90	12.3	639.7	636.0	0.013
LINE A1	MH-A28	MH-A29	1 - 5'S x 3'H Box Culv	218.85	15.56	25	7.27	149.7	186.1	0.80	10.0	634.8	633.0	0.013
LINE A1	MH-A29	MH-A30	1 - 5'S x 3'H Box Culv	247.00	15.91	25	7.19	151.4	186.1	0.80	10.1	631.0	629.0	0.013
LINE A1	MH-A30	MH-A31	1 - 5'S x 4'H Box Culv	172.06	16.30	25	7.10	156.2	212.7	0.50	7.8	626.4	625.5	0.013
LINE A1	MH-A31	MH-A32	1 - 5'S x 4'H Box Culv	59.34	16.44	25	7.10	158.0	212.7	0.50	7.9	625.4	625.1	0.013
LINE A1	MH-A32	BEND-A36	1 - 5'S x 4'H Box Culv	32.90	16.52	25	7.10	158.0	190.3	0.40	8.0	624.9	624.8	0.013
LINE A1	BEND-A36	OUTFALL A	1 - 5'S x 4'H Box Culv	17.92	16.55	25	---	158.0	190.3	0.40	10.1	624.8	624.7	0.013
LINE A1-1	CI-A10	MH-A67	1 - 24" RCP	29.73	10.42	25	8.79	2.1	17.2	0.50	1.2	656.6	656.4	0.013
LINE A1-10	CI-A11	MH-A27	1 - 24" RCP	8.80	14.67	25	7.48	1.6	17.2	0.50	3.2	644.0	644.0	0.013
LINE A1-10	CI-A12	MH-A27	1 - 24" RCP	31.62	14.67	25	7.48	2.6	17.2	0.50	3.7	644.1	644.0	0.013
LINE A1-11	CI-A14	MH-A28	1 - 24" RCP	29.73	15.24	25	7.34	3.0	34.4	2.00	6.2	638.6	638.0	0.013
LINE A1-11	CI-A13	MH-A28	1 - 24" RCP	9.73	15.24	25	7.34	3.5	29.8	1.50	5.5	638.1	638.0	0.013
LINE A1-12	CI-A15	MH-A29	1 - 24" RCP	9.73	15.56	25	7.27	3.3	17.2	0.50	4.0	635.0	635.0	0.013
LINE A1-13	CI-A18	MH-A30	1 - 24" RCP	29.75	15.91	25	7.19	3.4	34.4	2.00	6.4	631.6	631.0	0.013
LINE A1-13	CI-A17	MH-A30	1 - 24" RCP	9.73	15.91	25	7.19	3.9	24.3	1.00	5.1	631.1	631.0	0.013
LINE A1-14	CI-A20	MH-A31	1 - 24" RCP	34.25	16.30	25	7.10	1.5	17.2	0.50	0.5	628.2	628.0	0.013
LINE A1-14	CI-A19	MH-A31	1 - 24" RCP	5.23	16.30	25	7.10	2.0	17.2	0.50	0.8	628.3	628.3	0.013
LINE A1-15	AD-A21	COLLAR	1 - 24" RCP	15.38	0.06	25	---	35.3	28.8	1.40	11.2	657.6	657.4	0.013
LINE A1-2	CI-A2	MH-A22	1 - 30" RCP	39.73	11.41	25	8.45	1.9	31.2	0.50	0.5	655.5	655.3	0.013
LINE A1-2	CI-A1	MH-A22	1 - 24" RCP	29.72	11.41	25	8.45	2.6	17.2	0.50	1.2	655.9	655.8	0.013
LINE A1-3	CI-A65	MH-A66	1 - 24" RCP	17.73	11.76	25	8.33	1.5	17.2	0.50	3.2	656.6	656.6	0.013
LINE A1-3	AD-A33	CI-A44	1 - 30" RCP	17.41	10.05	25	8.92	33.5	31.2	0.50	7.1	656.1	656.0	0.013
LINE A1-3	CI-A44	MH-A66	1 - 30" RCP	39.59	11.76	25	8.33	35.6	31.2	0.50	8.4	655.9	655.7	0.013
LINE A1-4	CI-A3	MH-A23	1 - 24" RCP	16.73	12.74	25	8.02	1.8	17.2	0.50	3.4	656.5	656.4	0.013
LINE A1-4	AD-A60	CI-A38	1 - 24" RCP	17.27	10.07	25	8.92	14.6	17.2	0.50	5.4	656.9	656.8	0.013
LINE A1-4	CI-A38	MH-A23	1 - 24" RCP	38.73	12.74	25	8.02	16.7	17.2	0.50	6.7	656.7	656.5	0.013
LINE A1-5	CI-A5	MH-A24	1 - 24" RCP	16.75	13.09	25	7.91	1.1	17.2	0.50	2.9	655.0	654.9	0.013
LINE A1-5	CI-A41	MH-A24	1 - 24" RCP	38.73	13.09	25	7.91	1.2	17.2	0.50	3.0	655.4	655.2	0.013
LINE A1-6	CI-A7	MH-A50	1 - 24" RCP	16.75	13.71	25	7.74	2.5	24.3	1.00	4.6	652.1	651.9	0.013
LINE A1-6	CI-A42	MH-A50	1 - 24" RCP	38.73	13.71	25	7.74	3.4	17.2	0.50	4.0	652.1	651.9	0.013
LINE A1-7	CI-A9	MH-A26	1 - 24" RCP	16.75	14.11	25	7.63	2.1	42.1	3.00	6.3	648.5	648.0	0.013
LINE A1-7	AD-A62	MH-A26	1 - 24" RCP	59.00	14.11	25	7.63	18.6	17.2	0.50	7.1	648.9	648.6	0.013
LINE A1-8	CI-A37	MH-A34	1 - 24" RCP	38.73	14.23	25	7.60	3.1	17.2	0.50	3.9	647.5	647.3	0.013
LINE A1-9	CI-A63	MH-A25	1 - 24" RCP	33.97	14.40	25	7.56	2.4	24.3	1.00	4.7	646.3	645.9	0.013
LINE A2	A39	OUTFALL A2	1 - 24" RCP	32.38	10.14	25	---	1.1	24.3	1.00	3.7	627.3	627.0	0.013

DESIGN

INTERIM REVIEW

DOCUMENT INCOMPLETE. NOT INTENDED FOR PERMIT, BIDDING OR CONSTRUCTION.
ENGINEER: TYLER PAYNE DUBE
P.E. SERIAL NO: 118612
DATE: 1/9/2020

APPROVAL

INTERIM REVIEW

DOCUMENT INCOMPLETE. NOT INTENDED FOR PERMIT, BIDDING OR CONSTRUCTION.
ENGINEER: JOHN A. TYLER
P.E. SERIAL NO: 105193
DATE: 1/9/2020

REV.NO.	DATE	DESCRIPTION	BY

PAPE-DAWSON ENGINEERS
SAN ANTONIO | AUSTIN | HOUSTON | FORT WORTH | DALLAS
2000 NW LOOP 410 | SAN ANTONIO, TX 78213 | 210.375.9000
TBPE FIRM REGISTRATION #470 | TBPLS FIRM REGISTRATION #10028800

City of New Braunfels

KLEIN RD PHASE 2

STORM DRAIN COMPUTATION SYSTEM A

SHEET 2 OF 3

DGN:	STATE	PROJECT NO.	ROADWAY
CHK DGN:	TEXAS	NB 18-026	KLEIN RD
DWG:	COUNTY	CITY	SHEET NO.
CHK DWG:	GUADALUPE	NEW BRAUNFELS	200

Plotted on: 1/9/2020

Design Filename: H:\Projects\5103003\Design\Civil\Drainage\5103003_WKleinRd_HDS05.dgn

RUNOFF COMPUTATIONS AND DITCH ANALYSIS COMPUTATIONS - RATIONAL METHOD

CHANNEL NAME	DRN AREA (AC)	C	T_c (MIN)	INTENSITIES (IN/HR)		FLOW (CFS)		BOTTOM WIDTH	CHANNEL DEPTH	CHANNEL SLOPE	FORESLOPE	BACKSLOPE	N VALUE	CHANNEL FLOW DEPTH		CROSS SECTIONAL AREA		VELOCITIES	
				I_{25}	I_{100}	Q_{25}	Q_{100}	FT	FT	%	H:1V	H:1V		FT (25YR)	FT (100YR)	SQ FT (25YR)	SQ FT (100YR)	FT/S (25YR)	FT/S (100YR)
B1 (STA 140+99)	0.58	0.65	10.0	8.94	11.46	3.39	4.34	0	0.67	1.18%	3	3	0.015	0.52	0.57	0.81	0.97	4.18	4.48

CURB INLET COMPUTATIONS

INLET NO	OFFSET (FT)		CHAIN	STATION	CURB INLET CONFIGURATION	INLET TYPE	DRAINAGE AREA NO	Q FROM AREA (CFS)	CARRY OVER FLOW (CFS)	TOTAL Q (CFS)	CURB INLET ON GRADE: ROAD GRADE (FT/FT)	CURB INLET ON GRADE: DEPTH OF FLOW (FT)	CURB INLET ON GRADE: PONDED WIDTH (FT)	CURB INLET IN SAG: DEPTH OF FLOW (FT)	CURB INLET IN SAG: PONDED WIDTH (LEFT) (FT)	CURB INLET IN SAG: PONDED WIDTH (RIGHT) (FT)	ALLOW PONDED WIDTH (FT)	INLET LENGTH REQUIRED (FT)	INLET LENGTH (FT)	BY PASS FLOW (CFS)	BY PASS FLOW NODE
CI-B1	31.75	LT	KLEINCL	137+46.19	PCO15-3x5	On Grade	B1	2.3	0.0	2.3	0.0200	0.17	8.72	---	---	---	12.00	13.81	14.0	0.0	B3
CI-B10	36.75	RT	KLEINCL	149+92.00	PCO15-3x5	On Grade	B10	4.4	0.6	5.0	0.0165	0.24	12.00	---	---	---	12.00	20.25	14.0	0.6	B8
CI-B11	40.75	LT	KLEINCL	149+92.00	PCO15-3x5	On Grade	B11	4.0	0.0	4.0	0.0165	0.22	11.03	---	---	---	12.00	17.85	14.0	0.3	B9
CI-B2	31.75	RT	KLEINCL	137+46.19	PCO15-3x5 (w 8x8 Base)	On Grade	B2	2.7	0.0	2.7	0.0200	0.18	9.18	---	---	---	12.00	14.92	14.0	0.1	B4
CI-B20	33.86	RT	KLEINCL	144+52.07	PCO15-3x5	On Grade	B20	2.0	0.3	2.2	0.0132	0.19	9.28	---	---	---	12.00	12.27	14.0	0.0	B22
CI-B21	35.55	LT	KLEINCL	144+52.15	PCO15-3x5	On Grade	B21	2.2	0.2	2.3	0.0136	0.19	9.32	---	---	---	12.00	12.56	14.0	0.0	B5
CI-B22	31.75	RT	KLEINCL	143+00.00	PCO10L-3x5	On Grade	B22	1.3	0.0	1.3	0.0050	0.18	8.99	---	---	---	12.00	7.13	9.5	0.0	B6
CI-B28	36.75	RT	KLEINCL	150+87.00	PCO15-3x5	On Grade	B28	4.9	0.0	4.9	0.0165	0.24	11.97	---	---	---	12.00	20.19	14.0	0.6	B10
CI-B3	31.75	LT	KLEINCL	139+15.84	PCO15-3x5	Sag	B3	2.5	0.0	2.5	---	---	---	0.16	6.49	11.24	12.00	---	14.0	---	---
CI-B4	31.75	RT	KLEINCL	139+15.85	PCO15-3x5	Sag	B4	3.0	0.0	3.1	---	---	---	0.19	7.03	12.18	12.00	---	14.0	---	---
CI-B5	31.75	LT	KLEINCL	140+95.03	PCO15-3x5	On Grade	B5	2.7	0.0	2.7	0.0050	0.24	11.99	---	---	---	12.00	11.01	14.0	0.0	B3
CI-B6	31.75	RT	KLEINCL	140+95.03	PCO15-3x5	On Grade	B6	1.8	0.0	1.8	0.0050	0.20	10.21	---	---	---	12.00	8.64	14.0	0.0	B4
CI-B8	36.75	RT	KLEINCL	146+62.88	PCO15-3x5	On Grade	B8	3.1	0.6	3.7	0.0219	0.20	10.14	---	---	---	12.00	18.17	14.0	0.3	B20
CI-B9	40.75	LT	KLEINCL	146+63.25	PCO15-3x5	On Grade	B9	3.0	0.3	3.3	0.0219	0.20	9.75	---	---	---	12.00	17.13	14.0	0.2	B21

AREA ZONE DRAIN INLET COMPUTATIONS

INLET NO	OFFSET (FT)		CHAIN	STATION	DRAINAGE AREA NO	TOTAL Q (CFS)	INLET HEAD (FT)	REQ'D AREA (FT^2)	INLET AREA (FT^2)	INLET DESCRIPTION
AD-B27	37.82	LT	KLEINCL	140+95.03	B27	3.4	0.31	2.16	4.5	PSL FG-SFG 3x3 w 3x3 gr
AD-B7	49.00	LT	KLEINCL	144+52.05	B7	0.1	0.01	0.50	8.2	PSL FG-SFG 4x4

STORM SEWER COMPUTATIONS

LINE NO	FROM NODE	TO NODE	STRUCTURE SIZE	LENGTH (FT)	T_c (MIN)	FREQ. (YRS)	I_{25} (in/hr)	Q_{25} (CFS)	CAP (CFS)	SLOPE %	VEL (FT/SEC)	INVERT UPSTREAM (FT)	INVERT DOWNSTREAM (FT)	MANNING'S N VALUE
LINE B1	MH-B29	MH-B17	1 - 24" RCP	92.00	10.37	25	8.81	4.4	33.5	1.90	7.0	637.4	635.7	0.013
LINE B1	MH-B17	MH-B16	1 - 24" RCP	325.94	11.40	25	8.45	12.3	32.6	1.80	9.1	635.1	629.2	0.013
LINE B1	MH-B16	MH-B15	1 - 24" RCP	205.61	11.81	25	8.31	17.9	26.7	1.20	8.6	628.5	626.1	0.013
LINE B1	MH-B15	MH-B24	1 - 5'S x 3'H Box Culv	143.97	12.11	25	8.21	81.5	147.1	0.50	8.5	625.1	624.4	0.013
LINE B1	MH-B24	MH-B14	1 - 5'S x 3'H Box Culv	196.98	12.60	25	8.06	82.4	147.1	0.50	8.6	624.3	623.3	0.013
LINE B1	MH-B14	MH-B13	1 - 5'S x 3'H Box Culv	171.23	13.10	25	7.91	89.1	147.1	0.50	5.9	622.8	622.0	0.013
LINE B1	MH-B13	MH-B12	1 - 5'S x 3'H Box Culv	161.66	13.56	25	7.78	93.5	147.1	0.50	6.2	621.9	621.1	0.013
LINE B1	MH-B12	CI-B2	1 - 5'S x 3'H Box Culv	25.25	13.65	25	7.76	95.0	147.1	0.50	6.3	621.0	620.8	0.013
LINE B1	CI-B2	OUTFALL B	1 - 5'S x 3'H Box Culv	11.75	13.69	25	---	97.2	147.1	0.50	6.5	620.7	620.7	0.013
LINE B1-1	CI-B1	MH-B12	1 - 24" RCP	30.25	13.56	25	7.78	2.3	34.4	2.00	5.8	624.8	624.2	0.013
LINE B1-2	CI-B3	MH-B13	1 - 24" RCP	29.75	13.10	25	7.91	2.5	34.4	2.00	0.8	622.8	622.2	0.013
LINE B1-2	CI-B4	MH-B13	1 - 24" RCP	25.75	13.10	25	7.91	3.1	34.4	2.00	1.0	622.8	622.3	0.013
LINE B1-3	CI-B6	MH-B14	1 - 24" RCP	21.75	12.60	25	8.06	1.8	17.2	0.50	0.6	623.5	623.4	0.013
LINE B1-3	AD-B27	CI-B5	1 - 24" RCP	1.57	10.07	25	8.91	3.4	17.2	0.50	1.1	623.2	623.2	0.013
LINE B1-3	CI-B5	MH-B14	1 - 24" RCP	33.75	12.60	25	8.06	6.1	17.2	0.50	1.9	623.1	622.9	0.013
LINE B1-4	CI-B22	MH-B24	1 - 24" RCP	22.33	12.11	25	8.21	1.3	24.3	1.00	0.4	624.8	624.6	0.013
LINE B1-5	CI-B20	MH-B15	1 - 24" RCP	24.86	11.81	25	8.31	2.2	34.4	2.00	0.7	626.0	625.5	0.013
LINE B1-5	AD-B7	CI-B21	1 - 30" RCP	8.45	10.02	25	8.93	59.6	31.2	0.50	12.2	625.6	625.6	0.013
LINE B1-5	CI-B21	MH-B15	1 - 30" RCP	36.55	11.81	25	8.31	62.0	31.2	0.50	12.8	625.5	625.3	0.013
LINE B1-6	CI-B9	MH-B16	1 - 24" RCP	46.75	11.40	25	8.45	3.1	24.3	1.00	5.0	630.0	629.5	0.013
LINE B1-6	CI-B8	MH-B16	1 - 24" RCP	27.75	11.40	25	8.45	3.4	34.4	2.00	6.3	630.3	629.7	0.013
LINE B1-7	CI-B11	MH-B17	1 - 24" RCP	45.25	10.37	25	8.81	3.7	17.2	0.50	4.2	636.2	636.0	0.013
LINE B1-7	CI-B10	MH-B17	1 - 24" RCP	29.25	10.37	25	8.81	4.4	17.2	0.50	4.4	636.4	636.3	0.013
LINE B1-8	CI-B28	MH-B29	1 - 24" RCP	29.25	10.10	25	8.94	4.4	24.3	1.00	5.4	638.0	637.7	0.013

NOTE: CURB INLETS AND AREA ZONE DRAIN INLETS IN SAG CONDITION WERE ANALYZED USING A 50% CLOGGING FACTOR

DESIGN

INTERIM REVIEW

DOCUMENT INCOMPLETE. NOT INTENDED FOR PERMIT, BIDDING OR CONSTRUCTION.
ENGINEER: TYLER PAYNE DUBE
P.E. SERIAL NO: 118612
DATE: 1/9/2020

APPROVAL

INTERIM REVIEW

DOCUMENT INCOMPLETE. NOT INTENDED FOR PERMIT, BIDDING OR CONSTRUCTION.
ENGINEER: JOHN A. TYLER
P.E. SERIAL NO: 105193
DATE: 1/9/2020

REV. NO.	DATE	DESCRIPTION	BY

PAPE-DAWSON ENGINEERS
SAN ANTONIO | AUSTIN | HOUSTON | FORT WORTH | DALLAS
2000 NW LOOP 410 | SAN ANTONIO, TX 78213 | 210.375.9000
TBPE FIRM REGISTRATION #470 | TBPLS FIRM REGISTRATION #10028800

City of New Braunfels

KLEIN RD PHASE 2

STORM DRAIN COMPUTATION SYSTEM B

SHEET 3 OF 3

DGN:	STATE	PROJECT NO.	ROADWAY
CHK DGN:	TEXAS	NB 18-026	KLEIN RD
DWG:	COUNTY	CITY	SHEET NO.
CHK DWG:	GUADALUPE	NEW BRAUNFELS	201

Plotted on: 1/9/2020

Design Filename: H:\Projects\510\30\03\Design\Civil\Drainage\5103003_WKleinRd_DANotes.dgn

NOTES

1. SEE PERTINENT STRUCTURE LAYOUT OR PROFILE FOR ADDITIONAL DETAILS OF EACH STRUCTURE.
2. ALL PIPES ARE NORMAL TO AND STRAIGHT FROM STRUCTURE TO STRUCTURE UNLESS OTHERWISE SHOWN.
3. ANGLES AS SHOWN ON THE PLANS INDICATE DEVIATIONS OF PIPE ALIGNMENT FROM BEING NORMAL TO PROPOSED INLET, MH, ETC.
4. THE EXISTENCE AND LOCATION OF ALL UNDERGROUND UTILITIES AND DRAINAGE STRUCTURES INDICATED IN THE PLANS ARE TAKEN FROM THE BEST RECORDS AVAILABLE AND ARE NOT GUARANTEED TO BE ACCURATE. CONTRACTOR SHALL VERIFY ACTUAL LOCATION PRIOR TO BEGINNING CONSTRUCTION.
5. SEE HORIZONTAL ALIGNMENT SHEETS FOR ROADWAY ALIGNMENT.
6. SHORING OF EXISTING UTILITY POLES SUBSIDIARY TO INLET AND MANHOLE ITEMS.
7. MANHOLE LIDS TO BE BOLTED AND PLACED AT FINISHED GRADE AND OUTSIDE OF NORMAL WHEEL PATH (CENTER OF LANE).
8. ALL INLET STATION, OFFSET, AND ELEVATION REFERENCES ARE TO THE INLET STRUCTURE CONTAINING THE DOWNSTREAM LATERAL.
9. THIS PROJECT INCLUDES INSTALLATIONS GREATER THEN 5-FEET IN DEPTH LOCATED IN PUBLIC RIGHT-OF-WAY OR EASEMENTS. DEEP TRENCHES POSE COMPACTION TESTING AND CONSTRUCTION CHALLENGES AND CITY METHODS FOR TESTING AND COMPACTION MAY NOT BE ACHIEVABLE. AN INSTALLATION COMPACTION PLAN WILL BE REQUIRED AND MUST BE SUBMITTED FOR APPROVAL TO CITY PRIOR TO INSTALLATION.
10. EXISTING FEATURES ARE SHOWN SCREENBACK (I.E. FADED)

CONTROL POINTS FOR DRAINAGE STRUCTURES

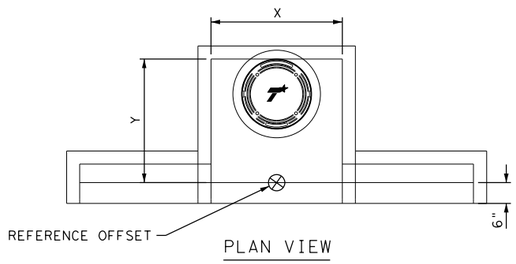

PLAN VIEW

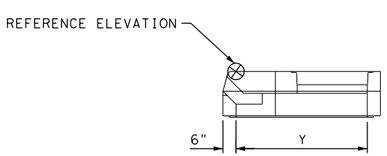

SIDE VIEW

CURB INLETS

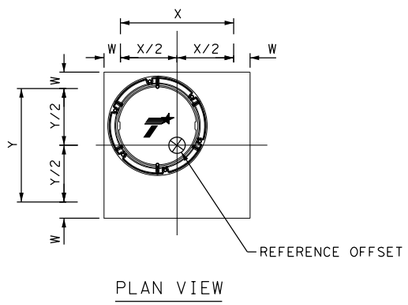

PLAN VIEW

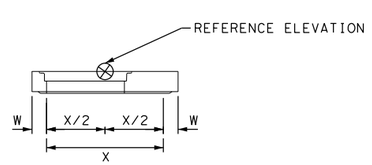

SIDE VIEW

PRECAST SLAB LIDS

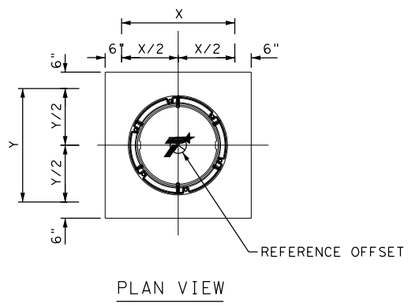

PLAN VIEW

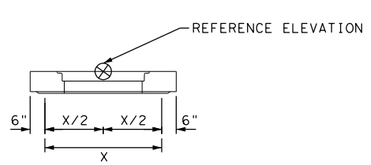

SIDE VIEW

PRECAST AREA ZONE DRAIN

NOTE:
REFER TO DRAINAGE STANDARDS FOR VARIABLE DIMENSIONS

DESIGN

INTERIM REVIEW
DOCUMENT INCOMPLETE. NOT INTENDED FOR PERMIT, BIDDING OR CONSTRUCTION.
ENGINEER: TYLER PAYNE DUBE
P.E. SERIAL NO: 118612
DATE: 1/9/2020

APPROVAL

INTERIM REVIEW
DOCUMENT INCOMPLETE. NOT INTENDED FOR PERMIT, BIDDING OR CONSTRUCTION.
ENGINEER: JOHN A. TYLER
P.E. SERIAL NO: 105193
DATE: 1/9/2020

NOT TO SCALE

REV. NO.	DATE	DESCRIPTION	BY

PAPE-DAWSON ENGINEERS
SAN ANTONIO | AUSTIN | HOUSTON | FORT WORTH | DALLAS
2000 NW LOOP 410 | SAN ANTONIO, TX 78213 | 210.375.9000
TBPE FIRM REGISTRATION #470 | TBPLS FIRM REGISTRATION #10028800

City of New Braunfels

KLEIN RD PHASE 2

DRAINAGE NOTES

DGN:	STATE	PROJECT NO.	ROADWAY
CHK DGN:	TEXAS	NB 18-026	KLEIN RD
DWG:	COUNTY	CITY	SHEET NO.
CHK DWG:	GUADALUPE	NEW BRAUNFELS	202

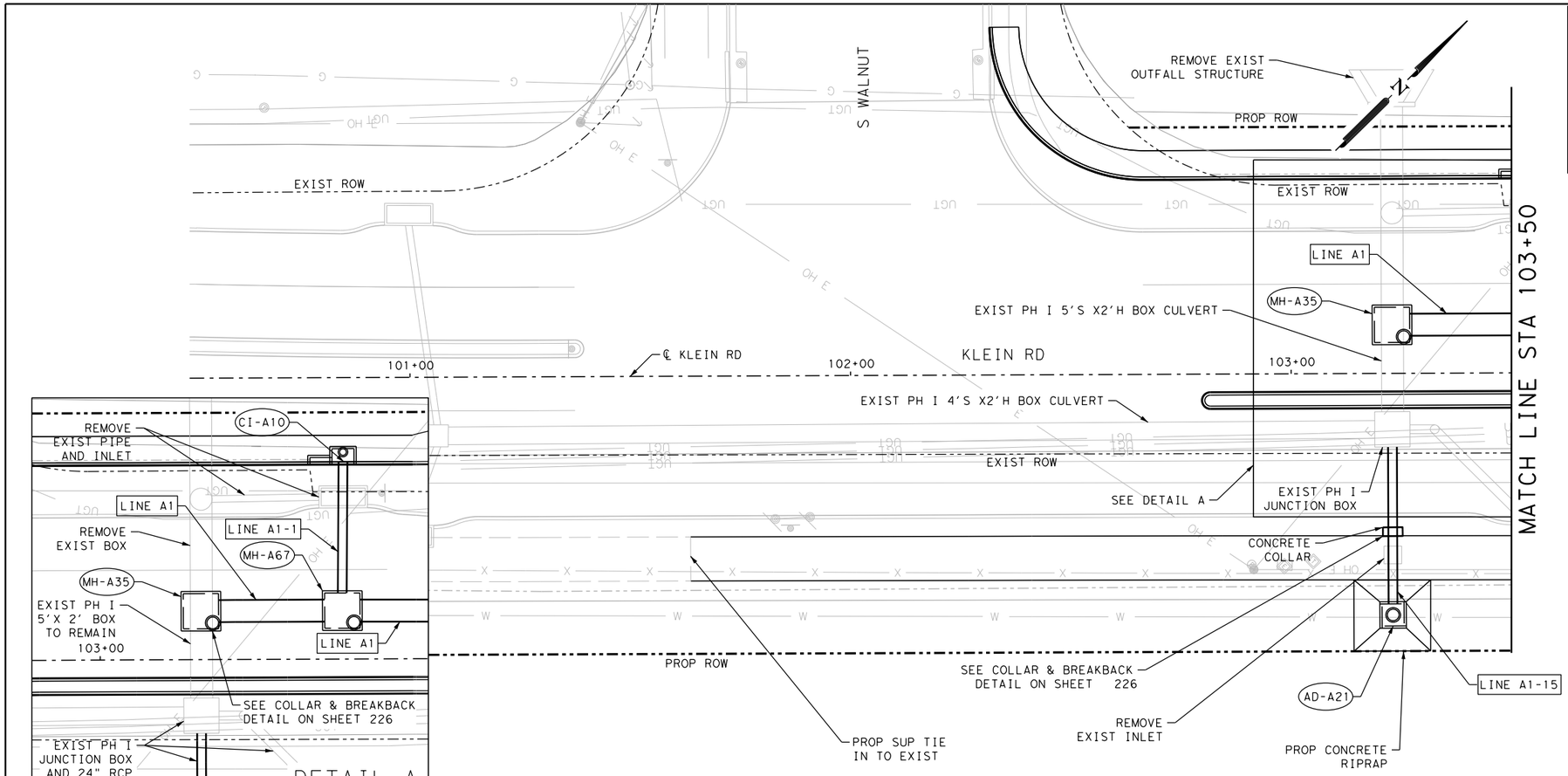

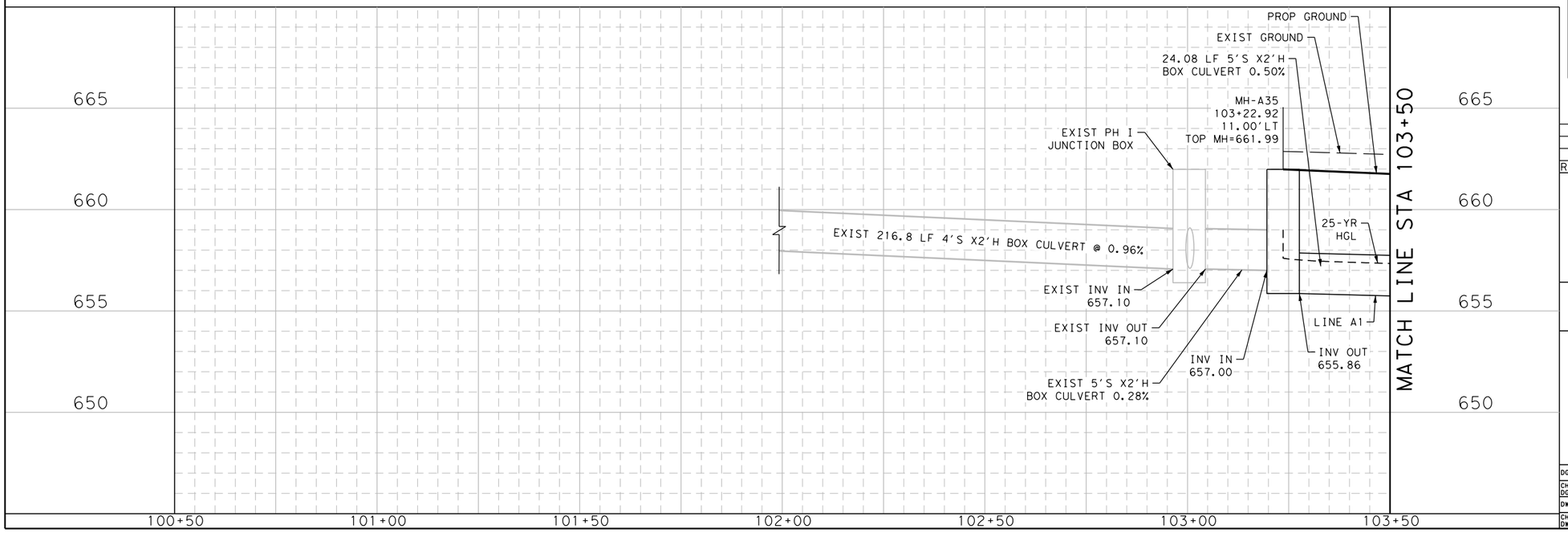

ITEM	DESCRIPTION	UNIT	QTY
0400-6002	STRUCT EXCAV (BOX)	CY	69.0
0400-6003	STRUCT EXCAV (PIPE)	CY	22.0
0402-6001	TRENCH EXCAVATION PROTECTION	LF	41
0420-6071	CL C CONC (COLLAR)	EA	1
0432-6003	RIPRAP (CONC)(6 IN)	CY	5.0
0462-6006	CONC BOX CULV (5 FT X 2 FT)	LF	25
0464-6005	RC PIPE (CL III)(24 IN)	LF	16
0465-6077	INLET (COMPL)(PSL)(RC)(8FTX8FT)	EA	1
0465-6154	INLET (COMPL)(PAZD)(RC)(5FTX5FT)	EA	1

NOTES:
1. ALL EXISTING FEATURES ARE SHOWN SCREENED BACK
2. THE EXISTENCE AND LOCATIONS OF ALL UNDERGROUND UTILITIES AND DRAINAGE STRUCTURES INDICATED IN THE PLANS ARE TAKEN FROM THE BEST RECORDS AVAILABLE AND ARE NOT GUARANTEED TO BE ACCURATE. CONTRACTOR SHALL VERIFY ACTUAL LOCATION PRIOR TO BEGINNING CONSTRUCTION.
3. INLETS AND MANHOLES TO BE GROUTED TO PROVIDE POSITIVE DRAINAGE. SUBSIDIARY TO INLET AND MANHOLE ITEMS.
4. ALL STORM DRAIN SYSTEMS TO BE INSTALLED IN ACCORDANCE WITH TXDOT ITEM 402 "TRENCH EXCAVATION PROTECTION."

LEGEND

- CI-5A — CURB INLET & DESIGNATION
- MH-2B — MANHOLE & DESIGNATION
- AD-2B — AREA ZONE DRAIN & DESIGNATION
- LINE A1-3 — STORM DRAIN STRUCTURE & DESIGNATION
- FLOW ARROW
- W — EXIST WATER LINE
- OH E — EXIST OVERHEAD ELECTRIC
- UG T — EXIST UNDERGROUND COMMUNICATIONS

DESIGN

INTERIM REVIEW

DOCUMENT INCOMPLETE. NOT INTENDED FOR PERMIT, BIDDING OR CONSTRUCTION.
ENGINEER: TYLER PAYNE DUBE
P.E. SERIAL NO: 118612
DATE: 1/9/2020

APPROVAL

INTERIM REVIEW

DOCUMENT INCOMPLETE. NOT INTENDED FOR PERMIT, BIDDING OR CONSTRUCTION.
ENGINEER: JOHN A. TYLER
P.E. SERIAL NO: 105193
DATE: 1/9/2020

0 10 20 30 60

SCALE: PLAN 1":30' PROFILE 1":6'

REV. NO.	DATE	DESCRIPTION	BY

PAPE-DAWSON ENGINEERS
SAN ANTONIO | AUSTIN | HOUSTON | FORT WORTH | DALLAS
2000 NW LOOP 410 | SAN ANTONIO, TX 78213 | 210.375.9000
TBPE FIRM REGISTRATION #470 | TBPLS FIRM REGISTRATION #10028800

City of New Braunfels

KLEIN RD PHASE 2

DRAINAGE PLAN & PROFILE

BEGIN PROJECT TO STA 103+50

SHEET 1 OF 17

DGN:	STATE	PROJECT NO.	ROADWAY
CHK DGN:	TEXAS	NB 18-026	KLEIN RD
DWG:	COUNTY	CITY	SHEET NO.
CHK DWG:	GUADALUPE	NEW BRAUNFELS	203

Plotted on: 1/9/2020

Design Filename: H:\projects\510\30\03\Design\Civil\Drainage\5103003_WKleinRd_DRN01.dgn

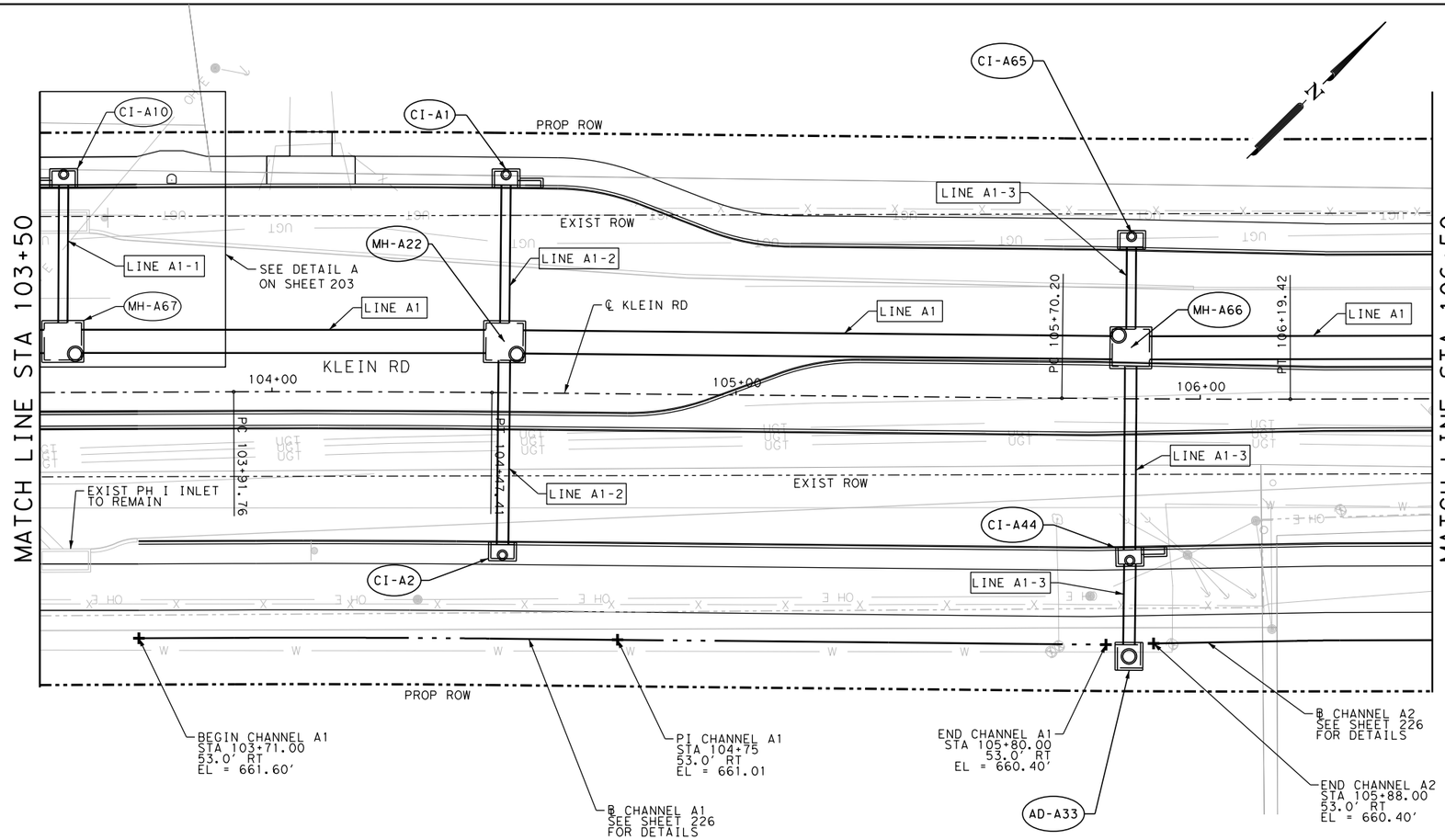

ITEM	DESCRIPTION	UNIT	QTY
0400-6002	STRUCT EXCAV (BOX)	CY	2779.0
0400-6003	STRUCT EXCAV (PIPE)	CY	300.0
0402-6001	TRENCH EXCAVATION PROTECTION	LF	897
0462-6006	CONC BOX CULV (5 FT X 2 FT)	LF	215
0462-6007	CONC BOX CULV (5 FT X 3 FT)	LF	507
0464-6005	RC PIPE (CL III)(24 IN)	LF	78
0464-6007	RC PIPE (CL III)(30 IN)	LF	97
0465-6021	INLET (COMPL)(PCO)(5FT)(NONE)	EA	3
0465-6022	INLET (COMPL)(PCO)(5FT)(LEFT)	EA	1
0465-6023	INLET (COMPL)(PCO)(5FT)(RIGHT)	EA	1
0465-6077	INLET (COMPL)(PSL)(RC)(8FTX8FT)	EA	2
0465-6154	INLET (COMPL)(PAZD)(RC)(5FTX5FT)	EA	1

NOTES:
1. ALL EXISTING FEATURES ARE SHOWN SCREENED BACK
2. THE EXISTENCE AND LOCATIONS OF ALL UNDERGROUND UTILITIES AND DRAINAGE STRUCTURES INDICATED IN THE PLANS ARE TAKEN FROM THE BEST RECORDS AVAILABLE AND ARE NOT GUARANTEED TO BE ACCURATE. CONTRACTOR SHALL VERIFY ACTUAL LOCATION PRIOR TO BEGINNING CONSTRUCTION.
3. INLETS AND MANHOLES TO BE GROUTED TO PROVIDE POSITIVE DRAINAGE. SUBSIDIARY TO INLET AND MANHOLE ITEMS.
4. ALL STORM DRAIN SYSTEMS TO BE INSTALLED IN ACCORDANCE WITH TXDOT ITEM 402 "TRENCH EXCAVATION PROTECTION."

LEGEND

CI-5A	CURB INLET & DESIGNATION
MH-2B	MANHOLE & DESIGNATION
AD-2B	AREA ZONE DRAIN & DESIGNATION
LINE A1-3	STORM DRAIN STRUCTURE & DESIGNATION
— · · · →	FLOW ARROW
W	EXIST WATER LINE
OH E	EXIST OVERHEAD ELECTRIC
UG T	EXIST UNDERGROUND COMMUNICATIONS

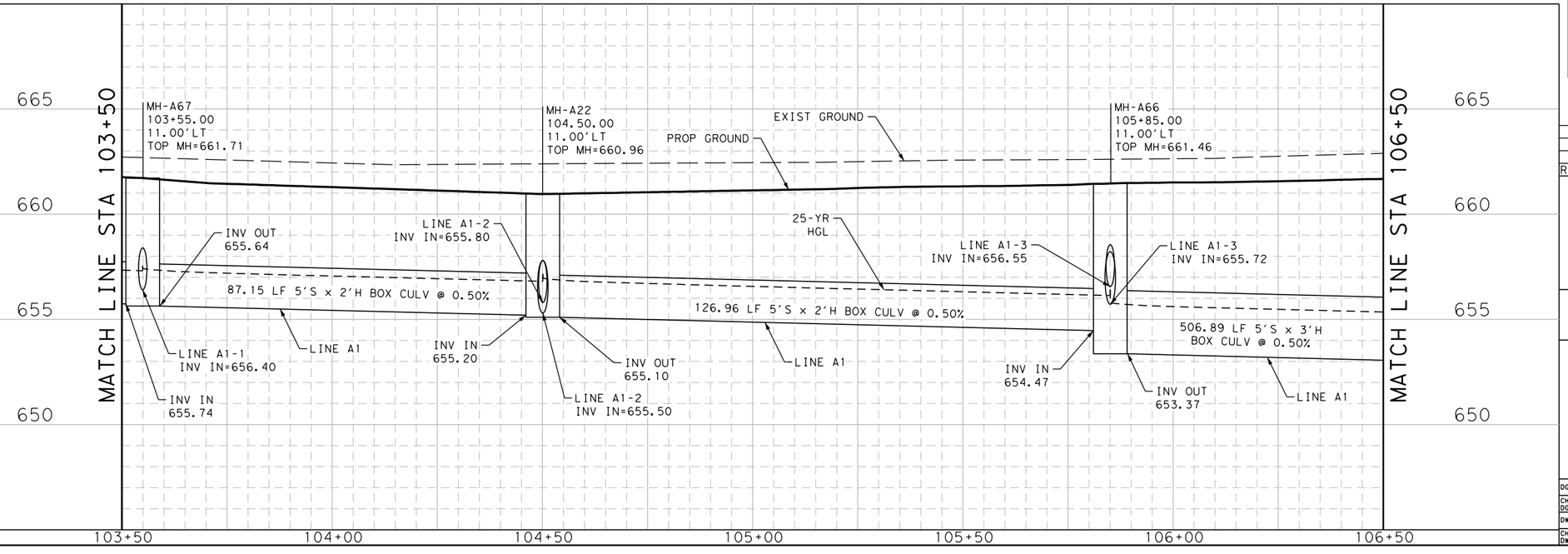

DESIGN

INTERIM REVIEW
DOCUMENT INCOMPLETE. NOT INTENDED FOR PERMIT, BIDDING OR CONSTRUCTION.
ENGINEER: TYLER PAYNE DUBE
P.E. SERIAL NO: 118612
DATE: 1/9/2020

APPROVAL

INTERIM REVIEW
DOCUMENT INCOMPLETE. NOT INTENDED FOR PERMIT, BIDDING OR CONSTRUCTION.
ENGINEER: JOHN A. TYLER
P.E. SERIAL NO: 105193
DATE: 1/9/2020

0 10 20 30 60

SCALE: PLAN 1":30' PROFILE 1":6'

REV. NO.	DATE	DESCRIPTION	BY

PAPE-DAWSON ENGINEERS
SAN ANTONIO | AUSTIN | HOUSTON | FORT WORTH | DALLAS
2000 NW LOOP 410 | SAN ANTONIO, TX 78213 | 210.375.9000
TBPE FIRM REGISTRATION #470 | TBPLS FIRM REGISTRATION #10028800

City of New Braunfels

KLEIN RD PHASE 2

DRAINAGE PLAN & PROFILE

STA 103+50 TO STA 106+50

SHEET 2 OF 17

DGN:	STATE	PROJECT NO.	ROADWAY
CHK DGN:	TEXAS	NB 18-026	KLEIN RD
DWG:	COUNTY	CITY	SHEET NO.
CHK DWG:	GUADALUPE	NEW BRAUNFELS	204

Plotted on: 1/9/2020

Design Filename: H:\projects\510\30\03\Design\Civil\Drainage\5103003_MK1einRd_DRN02.dgn

ITEM	DESCRIPTION	UNIT	QTY

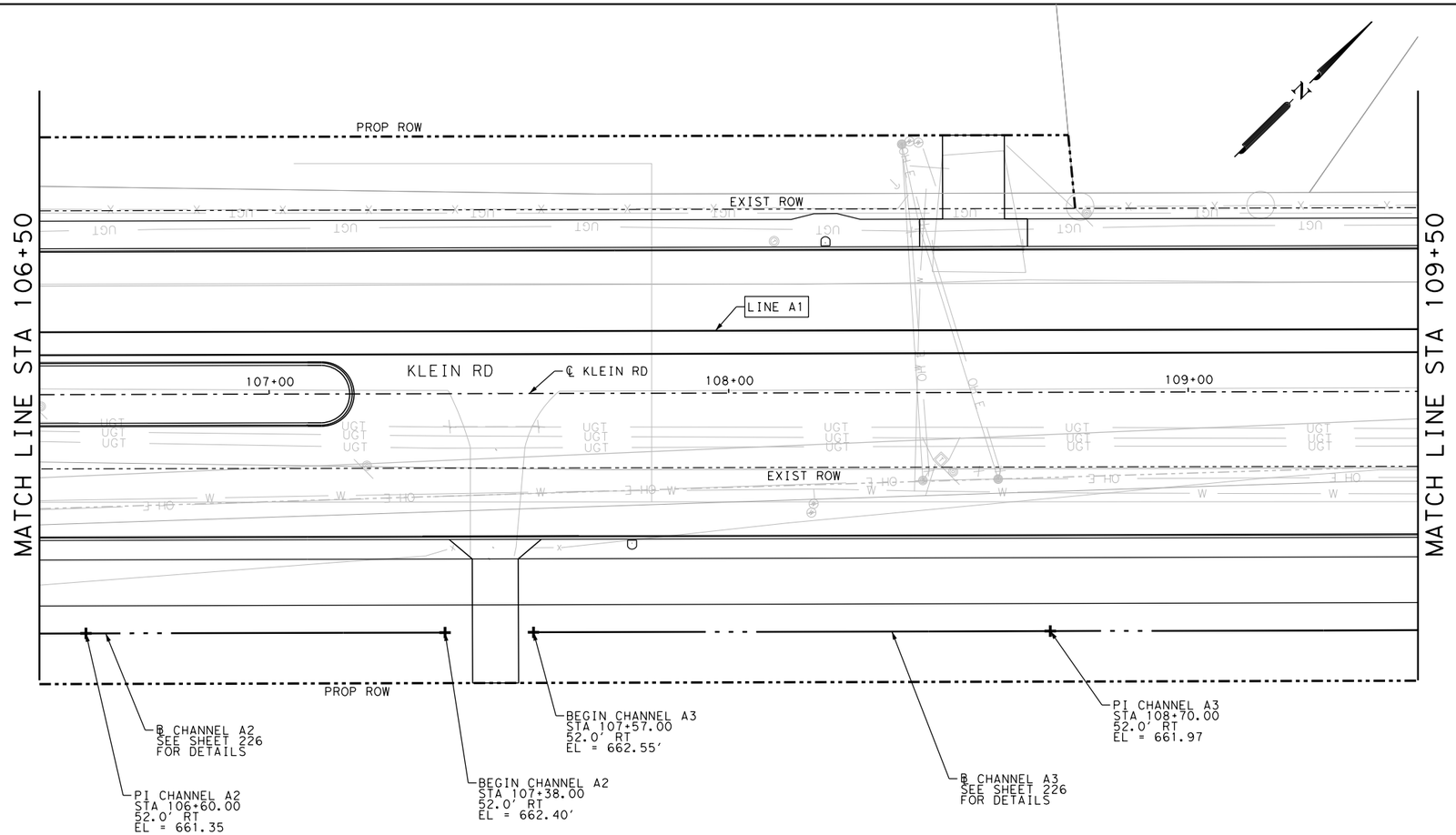

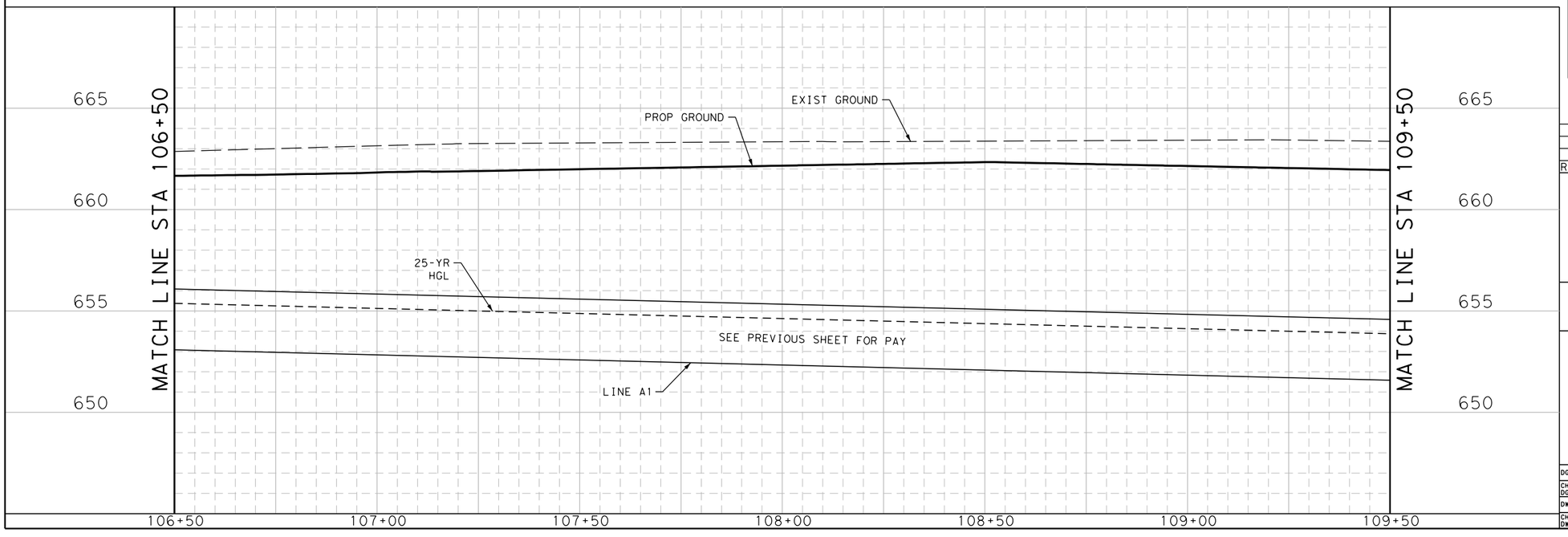

NOTES:
1. ALL EXISTING FEATURES ARE SHOWN SCREENED BACK
2. THE EXISTENCE AND LOCATIONS OF ALL UNDERGROUND UTILITIES AND DRAINAGE STRUCTURES INDICATED IN THE PLANS ARE TAKEN FROM THE BEST RECORDS AVAILABLE AND ARE NOT GUARANTEED TO BE ACCURATE. CONTRACTOR SHALL VERIFY ACTUAL LOCATION PRIOR TO BEGINNING CONSTRUCTION.
3. INLETS AND MANHOLES TO BE GROUTED TO PROVIDE POSITIVE DRAINAGE. SUBSIDIARY TO INLET AND MANHOLE ITEMS.
4. ALL STORM DRAIN SYSTEMS TO BE INSTALLED IN ACCORDANCE WITH TXDOT ITEM 402 "TRENCH EXCAVATION PROTECTION."

LEGEND

CI-5A	CURB INLET & DESIGNATION
MH-2B	MANHOLE & DESIGNATION
AD-2B	AREA ZONE DRAIN & DESIGNATION
LINE A1-3	STORM DRAIN STRUCTURE & DESIGNATION
— · · · →	FLOW ARROW
—— W ——	EXIST WATER LINE
—— OH E ——	EXIST OVERHEAD ELECTRIC
—— UG T ——	EXIST UNDERGROUND COMMUNICATIONS

DESIGN

INTERIM REVIEW
DOCUMENT INCOMPLETE. NOT INTENDED FOR PERMIT, BIDDING OR CONSTRUCTION.
ENGINEER: TYLER PAYNE DUBE
P.E. SERIAL NO: 118612
DATE: 1/9/2020

APPROVAL

INTERIM REVIEW
DOCUMENT INCOMPLETE. NOT INTENDED FOR PERMIT, BIDDING OR CONSTRUCTION.
ENGINEER: JOHN A. TYLER
P.E. SERIAL NO: 105193
DATE: 1/9/2020

0 10 20 30 60
SCALE: PLAN 1":30' PROFILE 1":6'

REV. NO.	DATE	DESCRIPTION	BY

PAPE-DAWSON ENGINEERS
SAN ANTONIO | AUSTIN | HOUSTON | FORT WORTH | DALLAS
2000 NW LOOP 410 | SAN ANTONIO, TX 78213 | 210.375.9000
TBPE FIRM REGISTRATION #470 | TBPLS FIRM REGISTRATION #10028800

City of New Braunfels

KLEIN RD PHASE 2

DRAINAGE PLAN & PROFILE

STA 106+50 TO STA 109+50

SHEET 3 OF 17

DGN:	STATE	PROJECT NO.	ROADWAY
CHK DGN:	TEXAS	NB 18-026	KLEIN RD
DWG:	COUNTY	CITY	SHEET NO.
CHK DWG:	GUADALUPE	NEW BRAUNFELS	205

Plotted on: 1/9/2020

Design Filename: H:\projects\510\30\03\Design\Civil\Drainage\5103003_WKleinRd_DRN03.dgn

Plotted on: 1/9/2020

Design Filename: H:\projects\510\30\03\Design\Civil\Drainage\5103003_WKleinRd_DRN04.dgn

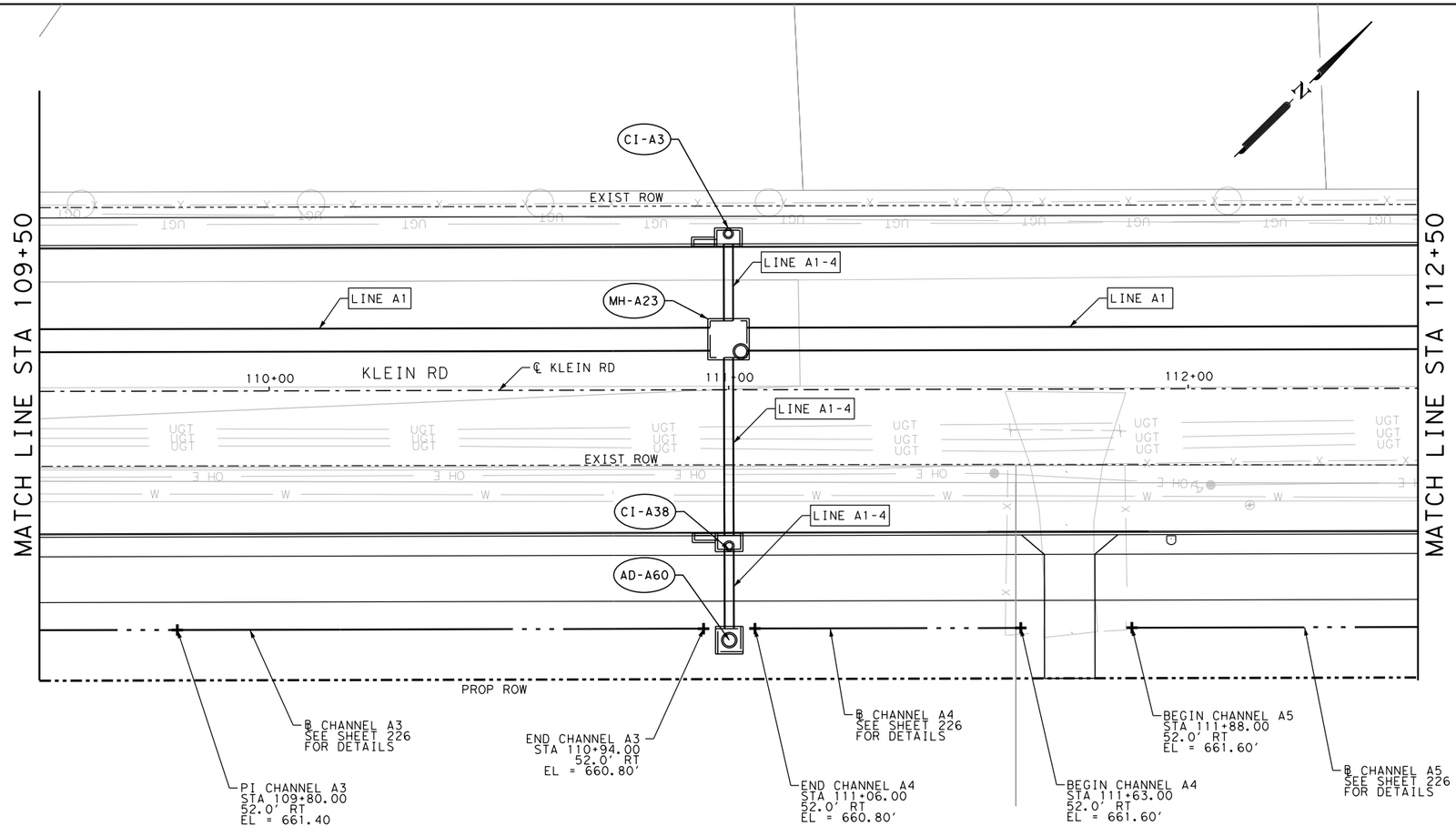

ITEM	DESCRIPTION	UNIT	QTY
0400-6002	STRUCT EXCAV (BOX)	CY	908.0
0400-6003	STRUCT EXCAV (PIPE)	CY	110.0
0402-6001	TRENCH EXCAVATION PROTECTION	LF	265
0462-6007	CONC BOX CULV (5 FT X 3 FT)	LF	192
0464-6005	RC PIPE (CL III) (24 IN)	LF	73
0465-6022	INLET (COMPL) (PCO) (5FT) (LEFT)	EA	1
0465-6023	INLET (COMPL) (PCO) (5FT) (RIGHT)	EA	1
0465-6077	INLET (COMPL) (PSL) (RC) (8FTX8FT)	EA	1
0465-6154	INLET (COMPL) (PAZD) (RC) (5FTX5FT)	EA	1

NOTES:
1. ALL EXISTING FEATURES ARE SHOWN SCREENED BACK
2. THE EXISTENCE AND LOCATIONS OF ALL UNDERGROUND UTILITIES AND DRAINAGE STRUCTURES INDICATED IN THE PLANS ARE TAKEN FROM THE BEST RECORDS AVAILABLE AND ARE NOT GUARANTEED TO BE ACCURATE. CONTRACTOR SHALL VERIFY ACTUAL LOCATION PRIOR TO BEGINNING CONSTRUCTION.
3. INLETS AND MANHOLES TO BE GROUTED TO PROVIDE POSITIVE DRAINAGE. SUBSIDIARY TO INLET AND MANHOLE ITEMS.
4. ALL STORM DRAIN SYSTEMS TO BE INSTALLED IN ACCORDANCE WITH TXDOT ITEM 402 "TRENCH EXCAVATION PROTECTION."

LEGEND

CI-5A	CURB INLET & DESIGNATION
MH-2B	MANHOLE & DESIGNATION
AD-2B	AREA ZONE DRAIN & DESIGNATION
LINE A1-3	STORM DRAIN STRUCTURE & DESIGNATION
— · · · →	FLOW ARROW
W	EXIST WATER LINE
OH E	EXIST OVERHEAD ELECTRIC
UG T	EXIST UNDERGROUND COMMUNICATIONS

DESIGN

INTERIM REVIEW
DOCUMENT INCOMPLETE. NOT INTENDED FOR PERMIT, BIDDING OR CONSTRUCTION.
ENGINEER: TYLER PAYNE DUBE
P.E. SERIAL NO: 118612
DATE: 1/9/2020

APPROVAL

INTERIM REVIEW
DOCUMENT INCOMPLETE. NOT INTENDED FOR PERMIT, BIDDING OR CONSTRUCTION.
ENGINEER: JOHN A. TYLER
P.E. SERIAL NO: 105193
DATE: 1/9/2020

0 10 20 30 60

SCALE: PLAN 1":30' PROFILE 1":6'

REV. NO.	DATE	DESCRIPTION	BY

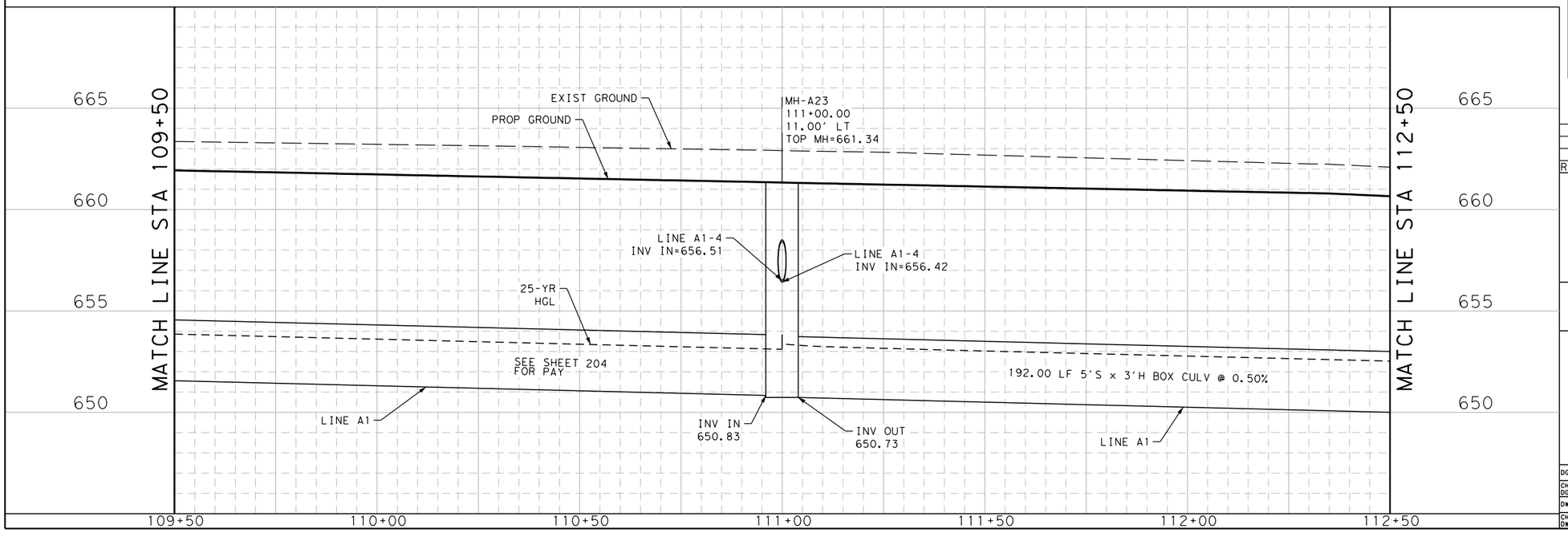

PAPE-DAWSON ENGINEERS
SAN ANTONIO | AUSTIN | HOUSTON | FORT WORTH | DALLAS
2000 NW LOOP 410 | SAN ANTONIO, TX 78213 | 210.375.9000
TBPE FIRM REGISTRATION #470 | TBPLS FIRM REGISTRATION #10028800

City of New Braunfels

KLEIN RD PHASE 2

DRAINAGE PLAN & PROFILE

STA 109+50 TO STA 112+50

SHEET 4 OF 17

DGN:	STATE	PROJECT NO.	ROADWAY
CHK DGN:	TEXAS	NB 18-026	KLEIN RD
DWG:	COUNTY	CITY	SHEET NO.
CHK DWG:	GUADALUPE	NEW BRAUNFELS	206

Plotted on: 1/9/2020

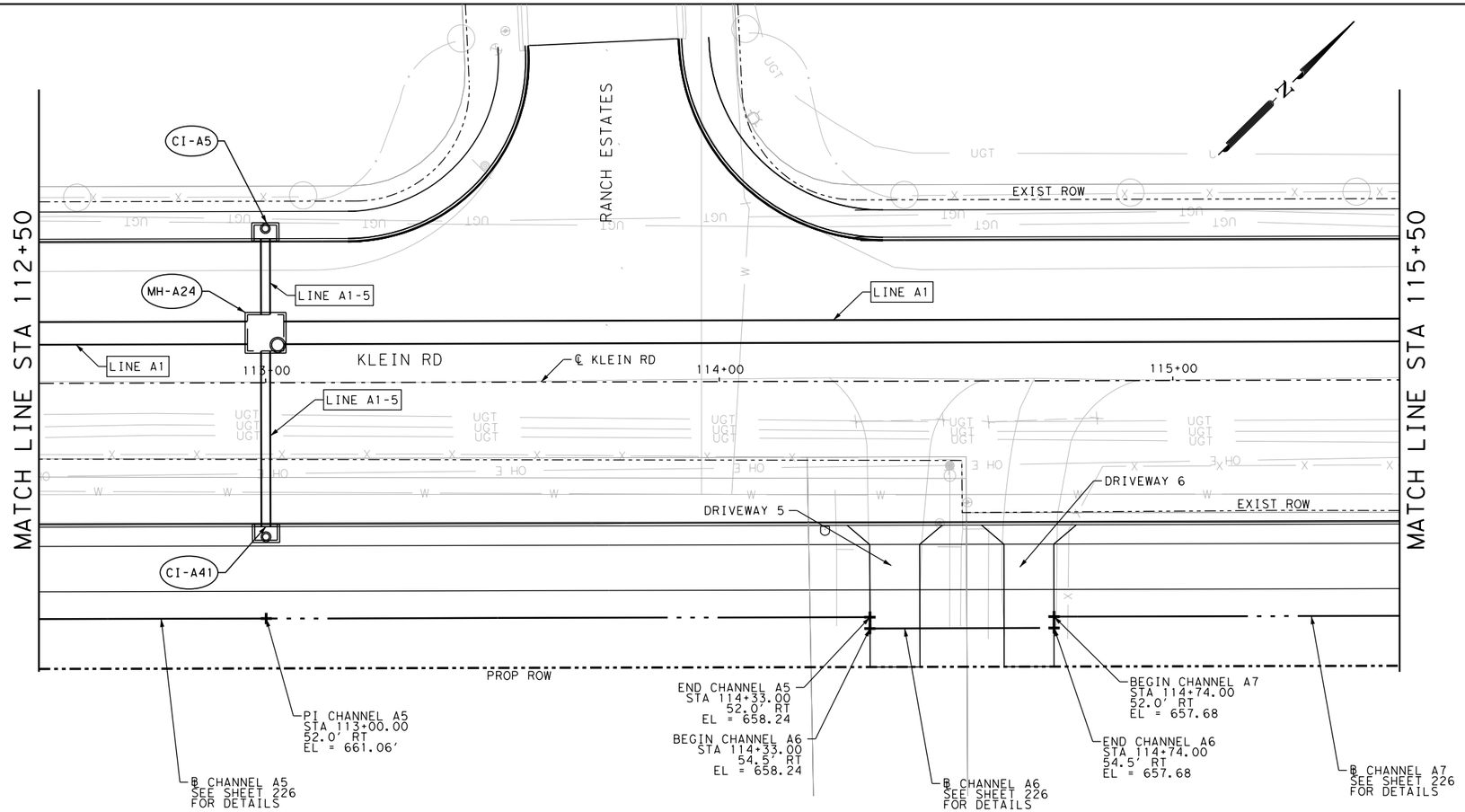

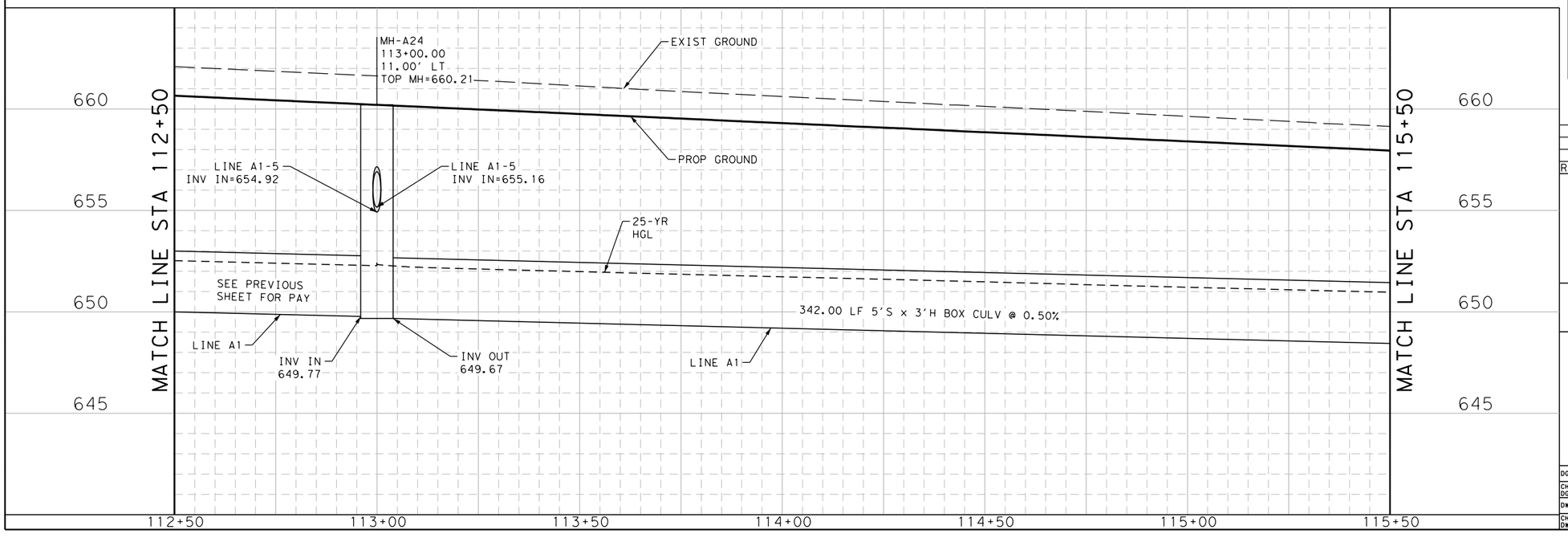

ITEM	DESCRIPTION	UNIT	QTY
0400-6002	STRUCT EXCAV (BOX)	CY	1491.0
0400-6003	STRUCT EXCAV (PIPE)	CY	89.0
0402-6001	TRENCH EXCAVATION PROTECTION	LF	398
0462-6007	CONC BOX CULV (5 FT X 3 FT)	LF	342
0464-6005	RC PIPE (CL III)(24 IN)	LF	56
0465-6021	INLET (COMPL)(PCO)(5FT)(NONE)	EA	2
0465-6077	INLET (COMPL)(PSL)(RC)(8FTX8FT)	EA	1

NOTES:
1. ALL EXISTING FEATURES ARE SHOWN SCREENED BACK
2. THE EXISTENCE AND LOCATIONS OF ALL UNDERGROUND UTILITIES AND DRAINAGE STRUCTURES INDICATED IN THE PLANS ARE TAKEN FROM THE BEST RECORDS AVAILABLE AND ARE NOT GUARANTEED TO BE ACCURATE. CONTRACTOR SHALL VERIFY ACTUAL LOCATION PRIOR TO BEGINNING CONSTRUCTION.
3. INLETS AND MANHOLES TO BE GROUTED TO PROVIDE POSITIVE DRAINAGE. SUBSIDIARY TO INLET AND MANHOLE ITEMS.
4. ALL STORM DRAIN SYSTEMS TO BE INSTALLED IN ACCORDANCE WITH TXDOT ITEM 402 "TRENCH EXCAVATION PROTECTION."

LEGEND

- CI-5A — CURB INLET & DESIGNATION
- MH-2B — MANHOLE & DESIGNATION
- AD-2B — AREA ZONE DRAIN & DESIGNATION
- LINE A1-3 — STORM DRAIN STRUCTURE & DESIGNATION
- FLOW ARROW
- W — EXIST WATER LINE
- OH E — EXIST OVERHEAD ELECTRIC
- UG T — EXIST UNDERGROUND COMMUNICATIONS

DESIGN

INTERIM REVIEW
DOCUMENT INCOMPLETE. NOT INTENDED FOR PERMIT, BIDDING OR CONSTRUCTION.
ENGINEER: TYLER PAYNE DUBE
P.E. SERIAL NO: 118612
DATE: 1/9/2020

APPROVAL

INTERIM REVIEW
DOCUMENT INCOMPLETE. NOT INTENDED FOR PERMIT, BIDDING OR CONSTRUCTION.
ENGINEER: JOHN A. TYLER
P.E. SERIAL NO: 105193
DATE: 1/9/2020

0 10 20 30 60

SCALE: PLAN 1":30' PROFILE 1":6'

REV.NO.	DATE	DESCRIPTION	BY

PAPE-DAWSON ENGINEERS
SAN ANTONIO | AUSTIN | HOUSTON | FORT WORTH | DALLAS
2000 NW LOOP 410 | SAN ANTONIO, TX 78213 | 210.375.9000
TBPE FIRM REGISTRATION #470 | TBPLS FIRM REGISTRATION #10028800

City of New Braunfels

KLEIN RD PHASE 2

DRAINAGE PLAN & PROFILE

STA 112+50 TO STA 115+50

SHEET 5 OF 17

DGN:	STATE	PROJECT NO.	ROADWAY
CHK DGN:	TEXAS	NB 18-026	KLEIN RD
DWG:	COUNTY	CITY	SHEET NO.
CHK DWG:	GUADALUPE	NEW BRAUNFELS	207

Design Filename: H:\projects\510\30\03\Design\Civil\Drainage\5103003_WKleinRd_DRN05.dgn

Plotted on: 1/9/2020

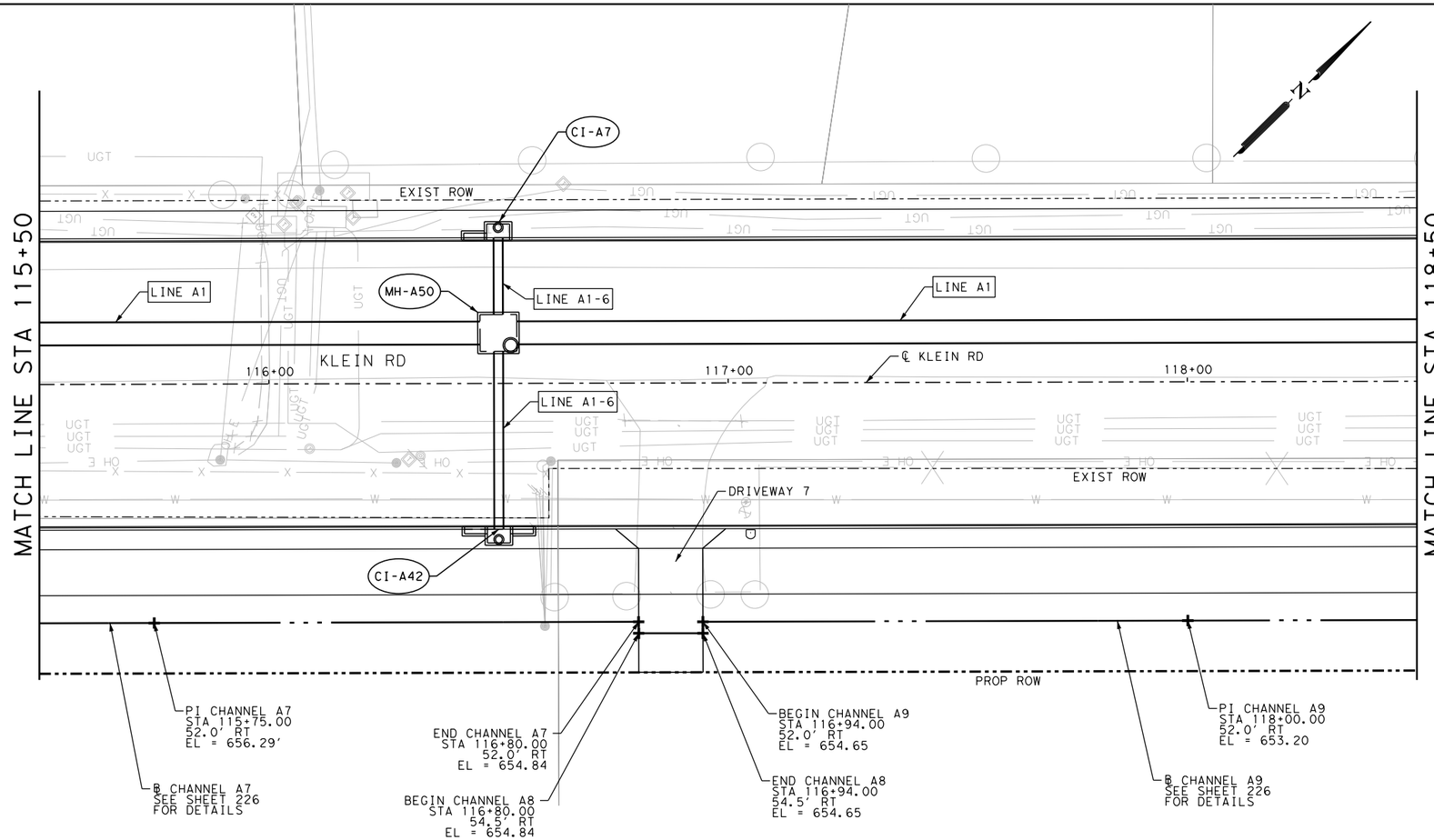

ITEM	DESCRIPTION	UNIT	QTY
0400-6002	STRUCT EXCAV (BOX)	CY	977.0
0400-6003	STRUCT EXCAV (PIPE)	CY	83.0
0402-6001	TRENCH EXCAVATION PROTECTION	LF	308
0462-6007	CONC BOX CULV (5 FT X 3 FT)	LF	252
0464-6005	RC PIPE (CL III)(24 IN)	LF	56
0465-6022	INLET (COMPL)(PCO)(5FT)(LEFT)	EA	1
0465-6024	INLET (COMPL)(PCO)(5FT)(BOTH)	EA	1
0465-6077	INLET (COMPL)(PSL)(RC)(8FTX8FT)	EA	1

NOTES:
1. ALL EXISTING FEATURES ARE SHOWN SCREENED BACK
2. THE EXISTENCE AND LOCATIONS OF ALL UNDERGROUND UTILITIES AND DRAINAGE STRUCTURES INDICATED IN THE PLANS ARE TAKEN FROM THE BEST RECORDS AVAILABLE AND ARE NOT GUARANTEED TO BE ACCURATE. CONTRACTOR SHALL VERIFY ACTUAL LOCATION PRIOR TO BEGINNING CONSTRUCTION.
3. INLETS AND MANHOLES TO BE GROUTED TO PROVIDE POSITIVE DRAINAGE. SUBSIDIARY TO INLET AND MANHOLE ITEMS.
4. ALL STORM DRAIN SYSTEMS TO BE INSTALLED IN ACCORDANCE WITH TXDOT ITEM 402 "TRENCH EXCAVATION PROTECTION."

LEGEND

CI-5A	CURB INLET & DESIGNATION
MH-2B	MANHOLE & DESIGNATION
AD-2B	AREA ZONE DRAIN & DESIGNATION
LINE A1-3	STORM DRAIN STRUCTURE & DESIGNATION
— · · · →	FLOW ARROW
W	EXIST WATER LINE
OH E	EXIST OVERHEAD ELECTRIC
UG T	EXIST UNDERGROUND COMMUNICATIONS

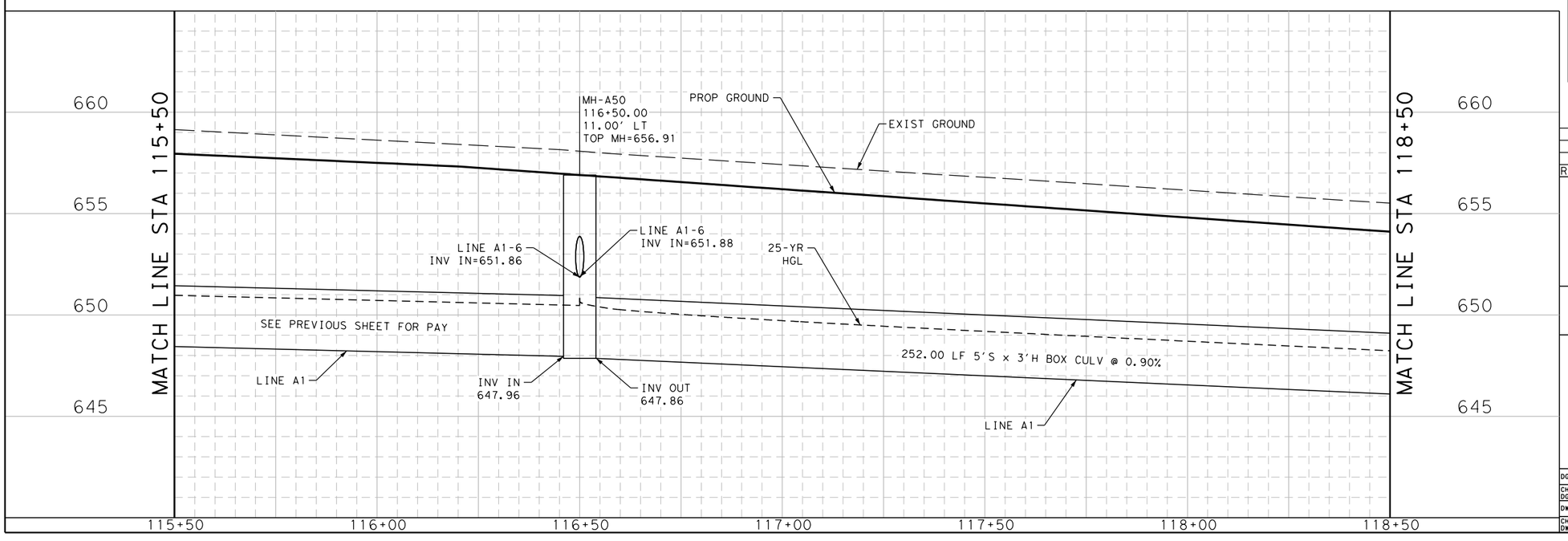

DESIGN

INTERIM REVIEW
DOCUMENT INCOMPLETE. NOT INTENDED FOR PERMIT, BIDDING OR CONSTRUCTION.
ENGINEER: TYLER PAYNE DUBE
P.E. SERIAL NO: 118612
DATE: 1/9/2020

APPROVAL

INTERIM REVIEW
DOCUMENT INCOMPLETE. NOT INTENDED FOR PERMIT, BIDDING OR CONSTRUCTION.
ENGINEER: JOHN A. TYLER
P.E. SERIAL NO: 105193
DATE: 1/9/2020

0 10 20 30 60

SCALE: PLAN 1":30' PROFILE 1":6'

REV. NO.	DATE	DESCRIPTION	BY

PAPE-DAWSON ENGINEERS
SAN ANTONIO | AUSTIN | HOUSTON | FORT WORTH | DALLAS
2000 NW LOOP 410 | SAN ANTONIO, TX 78213 | 210.375.9000
TBPE FIRM REGISTRATION #470 | TBPLS FIRM REGISTRATION #10028800

City of New Braunfels

KLEIN RD PHASE 2

DRAINAGE PLAN & PROFILE

STA 115+50 TO STA 118+50

SHEET 6 OF 17

DGN:	STATE	PROJECT NO.	ROADWAY
CHK DGN:	TEXAS	NB 18-026	KLEIN RD
DWG:	COUNTY	CITY	SHEET NO.
CHK DWG:	GUADALUPE	NEW BRAUNFELS	208

Design Filename: H:\projects\510\30\03\Design\Civil\Drainage\5103003_WKleinRd_DRN06.dgn

Plotted on: 1/9/2020

Design Filename: H:\projects\510\30\03\Design\Civil\Drainage\5103003_WKleinRd_DRN07.dgn

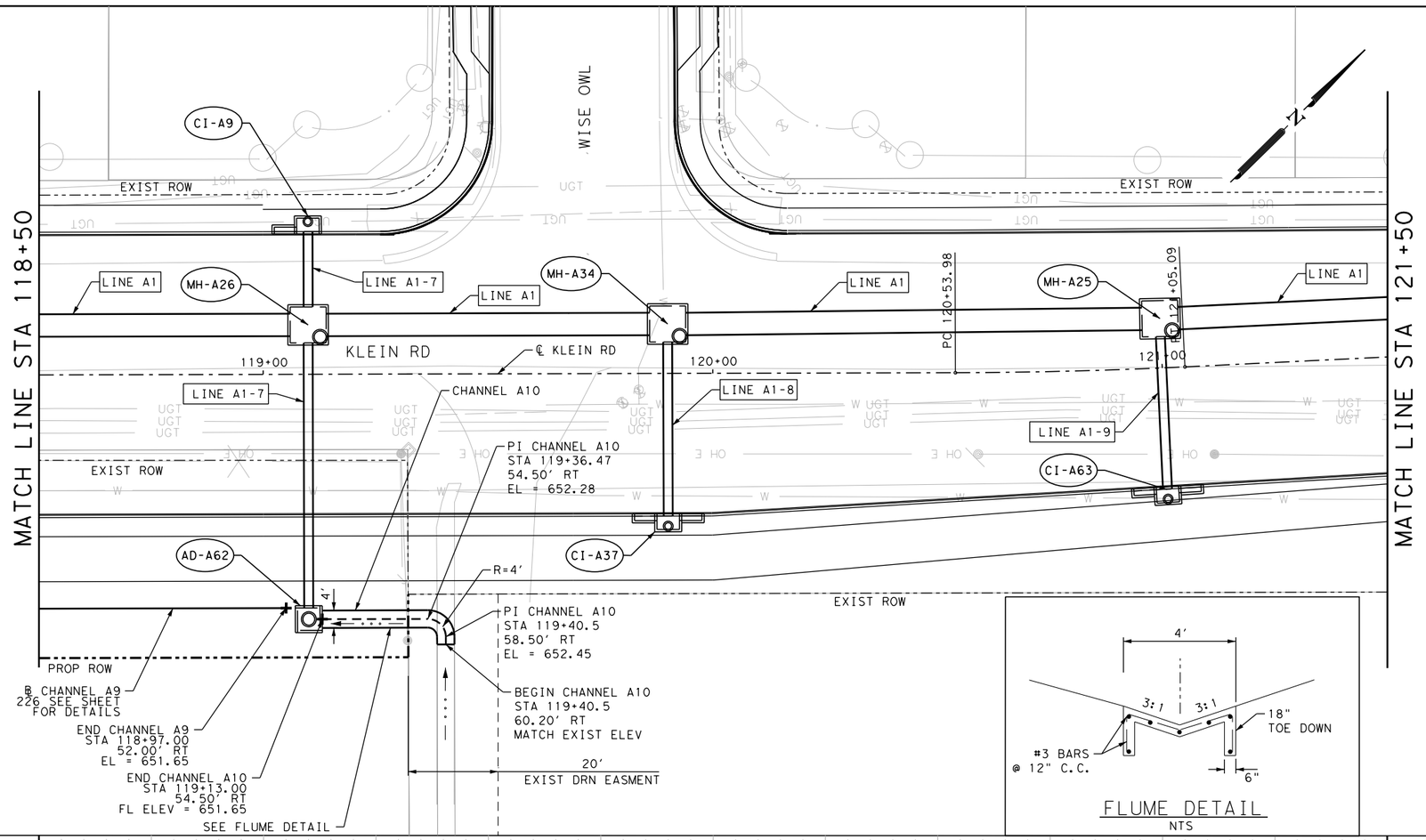

FLUME DETAIL
NTS

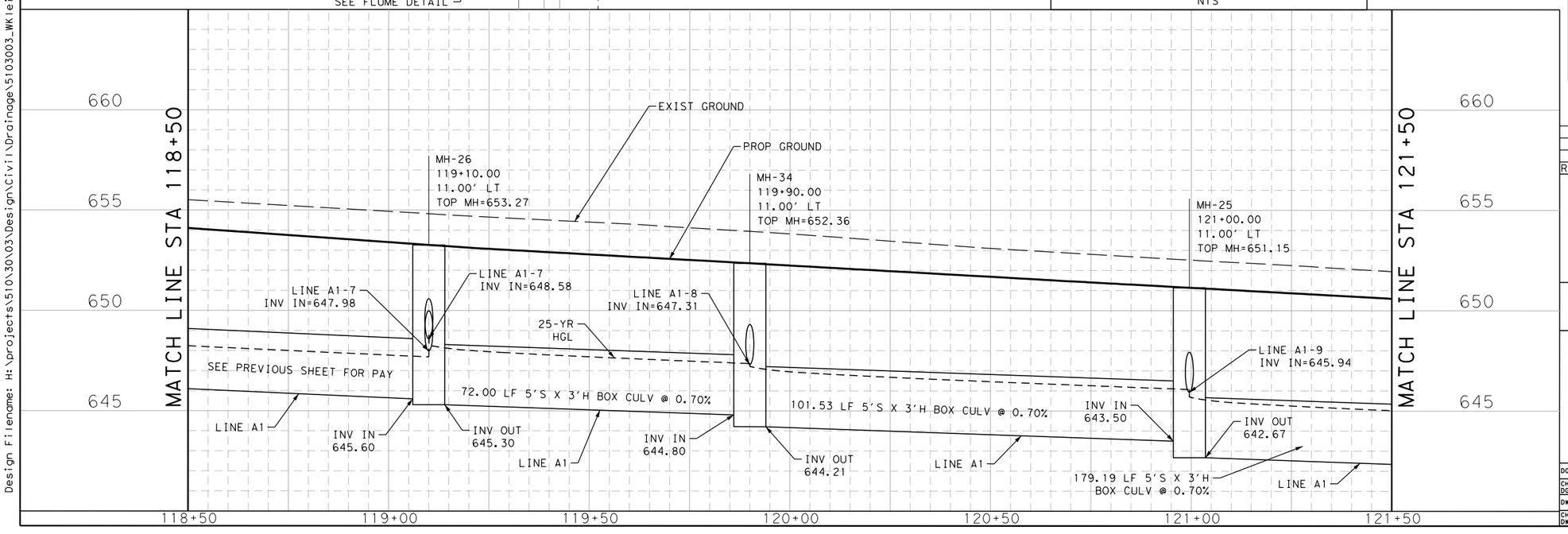

ITEM	DESCRIPTION	UNIT	QTY
0400-6002	STRUCT EXCAV (BOX)	CY	1302.0
0400-6003	STRUCT EXCAV (PIPE)	CY	223.0
0402-6001	TRENCH EXCAVATION PROTECTION	LF	502
0432-6044	RIPRAP (CONC)(FLUME)	CY	4.0
0462-6007	CONC BOX CULV (5 FT X 3 FT)	LF	353
0464-6005	RC PIPE (CL III)(24 IN)	LF	149
0465-6022	INLET (COMPL)(PCO)(5FT)(LEFT)	EA	1
0465-6024	INLET (COMPL)(PCO)(5FT)(BOTH)	EA	2
0465-6077	INLET (COMPL)(PSL)(RC)(8FTX8FT)	EA	3
0465-6154	INLET (COMPL)(PAZD)(RC)(5FTX5FT)	EA	1

NOTES:
1. ALL EXISTING FEATURES ARE SHOWN SCREENED BACK
2. THE EXISTENCE AND LOCATIONS OF ALL UNDERGROUND UTILITIES AND DRAINAGE STRUCTURES INDICATED IN THE PLANS ARE TAKEN FROM THE BEST RECORDS AVAILABLE AND ARE NOT GUARANTEED TO BE ACCURATE. CONTRACTOR SHALL VERIFY ACTUAL LOCATION PRIOR TO BEGINNING CONSTRUCTION.
3. INLETS AND MANHOLES TO BE GROUTED TO PROVIDE POSITIVE DRAINAGE. SUBSIDIARY TO INLET AND MANHOLE ITEMS.
4. ALL STORM DRAIN SYSTEMS TO BE INSTALLED IN ACCORDANCE WITH TXDOT ITEM 402 "TRENCH EXCAVATION PROTECTION."

LEGEND

CI-5A	CURB INLET & DESIGNATION
MH-2B	MANHOLE & DESIGNATION
AD-2B	AREA ZONE DRAIN & DESIGNATION
LINE A1-3	STORM DRAIN STRUCTURE & DESIGNATION
— • • • →	FLOW ARROW
W	EXIST WATER LINE
OH E	EXIST OVERHEAD ELECTRIC
UG T	EXIST UNDERGROUND COMMUNICATIONS

DESIGN

INTERIM REVIEW
DOCUMENT INCOMPLETE. NOT INTENDED FOR PERMIT, BIDDING OR CONSTRUCTION.
ENGINEER: TYLER PAYNE DUBE
P.E. SERIAL NO: 118612
DATE: 1/9/2020

APPROVAL

INTERIM REVIEW
DOCUMENT INCOMPLETE. NOT INTENDED FOR PERMIT, BIDDING OR CONSTRUCTION.
ENGINEER: JOHN A. TYLER
P.E. SERIAL NO: 105193
DATE: 1/9/2020

0 10 20 30 60

SCALE: PLAN 1":30' PROFILE 1":6'

REV. NO.	DATE	DESCRIPTION	BY

PAPE-DAWSON ENGINEERS
SAN ANTONIO | AUSTIN | HOUSTON | FORT WORTH | DALLAS
2000 NW LOOP 410 | SAN ANTONIO, TX 78213 | 210.375.9000
TBPE FIRM REGISTRATION #470 | TBPLS FIRM REGISTRATION #10028800

City of New Braunfels

KLEIN RD PHASE 2

DRAINAGE PLAN & PROFILE

STA 118+50 TO STA 121+50

SHEET 7 OF 17

DGN:	STATE	PROJECT NO.	ROADWAY
CHK DGN:	TEXAS	NB 18-026	KLEIN RD
DWG:	COUNTY	CITY	SHEET NO.
CHK DWG:	GUADALUPE	NEW BRAUNFELS	209

Plotted on: 1/9/2020

Design Filename: H:\projects\510\30\03\Design\Civil\Drainage\5103003_WKleinRd_DRN08.dgn

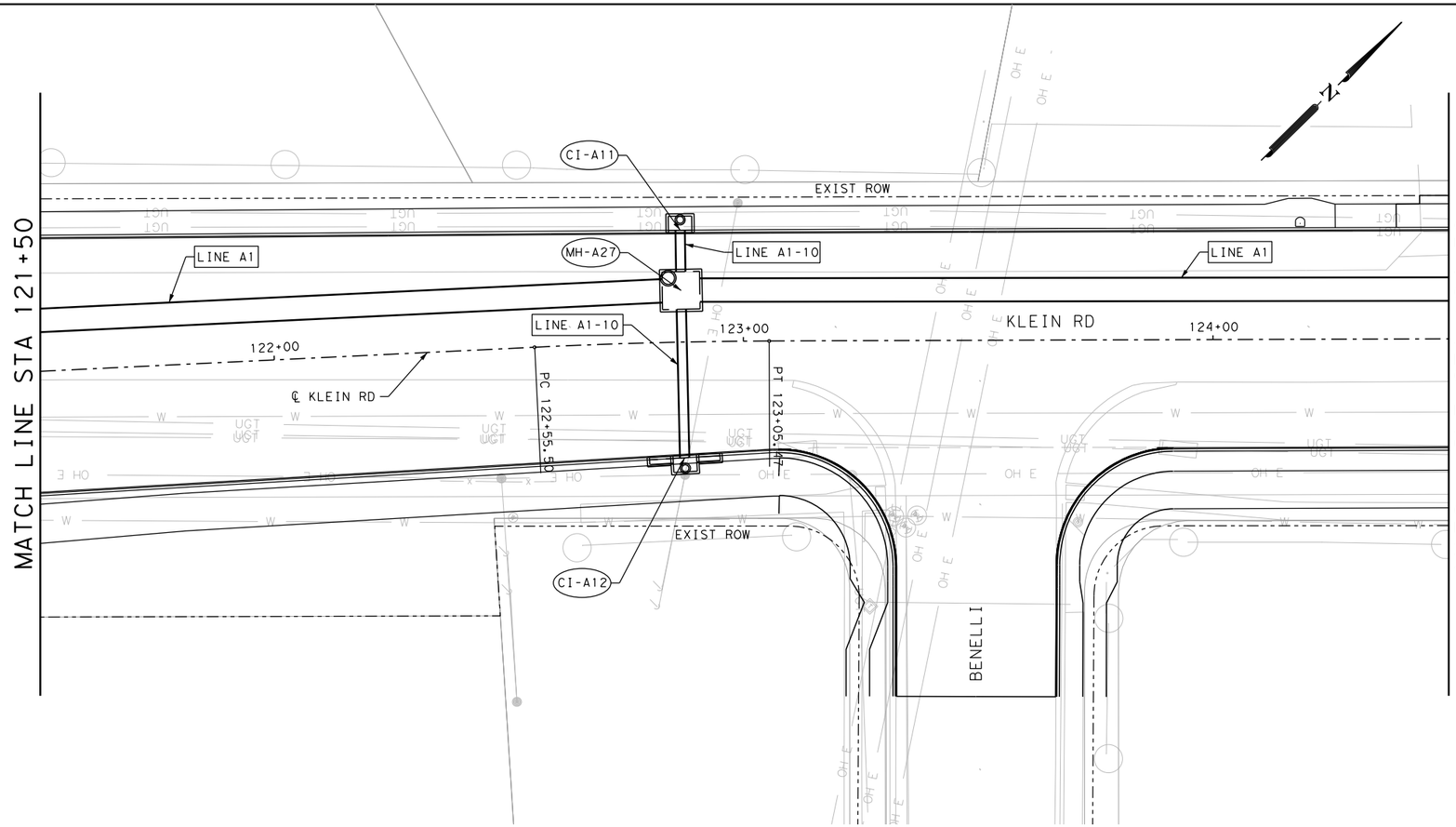

ITEM	DESCRIPTION	UNIT	QTY
0400-6002	STRUCT EXCAV (BOX)	CY	1523.0
0400-6003	STRUCT EXCAV (PIPE)	CY	57.0
0402-6001	TRENCH EXCAVATION PROTECTION	LF	450
0462-6007	CONC BOX CULV (5 FT X 3 FT)	LF	409
0464-6005	RC PIPE (CL III)(24 IN)	LF	41
0465-6021	INLET (COMPL)(PCO)(5FT)(NONE)	EA	1
0465-6024	INLET (COMPL)(PCO)(5FT)(BOTH)	EA	1
0465-6077	INLET (COMPL)(PSL)(RC)(8FTX8FT)	EA	1

NOTES:
1. ALL EXISTING FEATURES ARE SHOWN SCREENED BACK
2. THE EXISTENCE AND LOCATIONS OF ALL UNDERGROUND UTILITIES AND DRAINAGE STRUCTURES INDICATED IN THE PLANS ARE TAKEN FROM THE BEST RECORDS AVAILABLE AND ARE NOT GUARANTEED TO BE ACCURATE. CONTRACTOR SHALL VERIFY ACTUAL LOCATION PRIOR TO BEGINNING CONSTRUCTION.
3. INLETS AND MANHOLES TO BE GROUTED TO PROVIDE POSITIVE DRAINAGE. SUBSIDIARY TO INLET AND MANHOLE ITEMS.
4. ALL STORM DRAIN SYSTEMS TO BE INSTALLED IN ACCORDANCE WITH TXDOT ITEM 402 "TRENCH EXCAVATION PROTECTION."

LEGEND

- CI-5A — CURB INLET & DESIGNATION
- MH-2B — MANHOLE & DESIGNATION
- AD-2B — AREA ZONE DRAIN & DESIGNATION
- LINE A1-3 — STORM DRAIN STRUCTURE & DESIGNATION
- FLOW ARROW
- W — EXIST WATER LINE
- OH E — EXIST OVERHEAD ELECTRIC
- UG T — EXIST UNDERGROUND COMMUNICATIONS

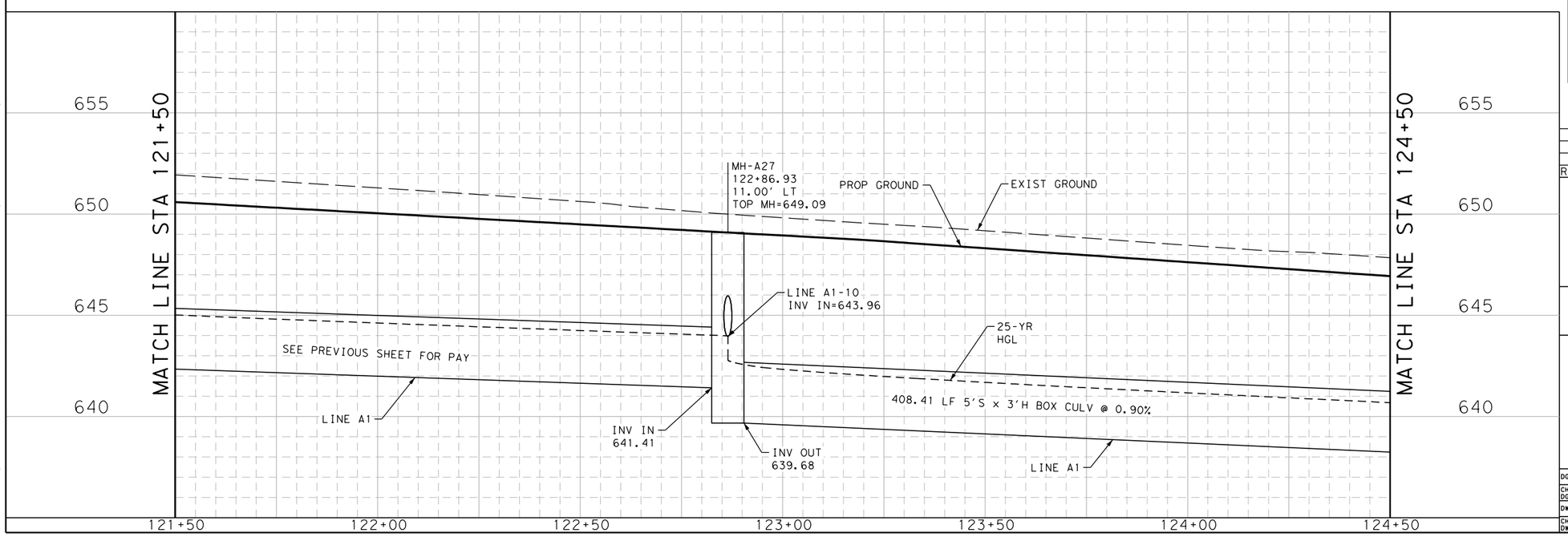

DESIGN

INTERIM REVIEW
DOCUMENT INCOMPLETE. NOT INTENDED FOR PERMIT, BIDDING OR CONSTRUCTION.
ENGINEER: TYLER PAYNE DUBE
P.E. SERIAL NO: 118612
DATE: 1/9/2020

APPROVAL

INTERIM REVIEW
DOCUMENT INCOMPLETE. NOT INTENDED FOR PERMIT, BIDDING OR CONSTRUCTION.
ENGINEER: JOHN A. TYLER
P.E. SERIAL NO: 105193
DATE: 1/9/2020

0 10 20 30 60

SCALE: PLAN 1":30' PROFILE 1":6'

REV. NO.	DATE	DESCRIPTION	BY

PAPE-DAWSON ENGINEERS
SAN ANTONIO | AUSTIN | HOUSTON | FORT WORTH | DALLAS
2000 NW LOOP 410 | SAN ANTONIO, TX 78213 | 210.375.9000
TBPE FIRM REGISTRATION #470 | TBPLS FIRM REGISTRATION #10028800

City of New Braunfels

KLEIN RD PHASE 2

DRAINAGE PLAN & PROFILE

STA 121+50 TO STA 124+50

SHEET 8 OF 17

DGN:	STATE	PROJECT NO.	ROADWAY
CHK DGN:	TEXAS	NB 18-026	KLEIN RD
DWG:	COUNTY	CITY	SHEET NO.
CHK DWG:	GUADALUPE	NEW BRAUNFELS	210

Plotted on: 1/9/2020

Design Filename: H:\projects\510\30\03\Design\Civil\Drainage\5103003_WKleinRd_DRN09.dgn

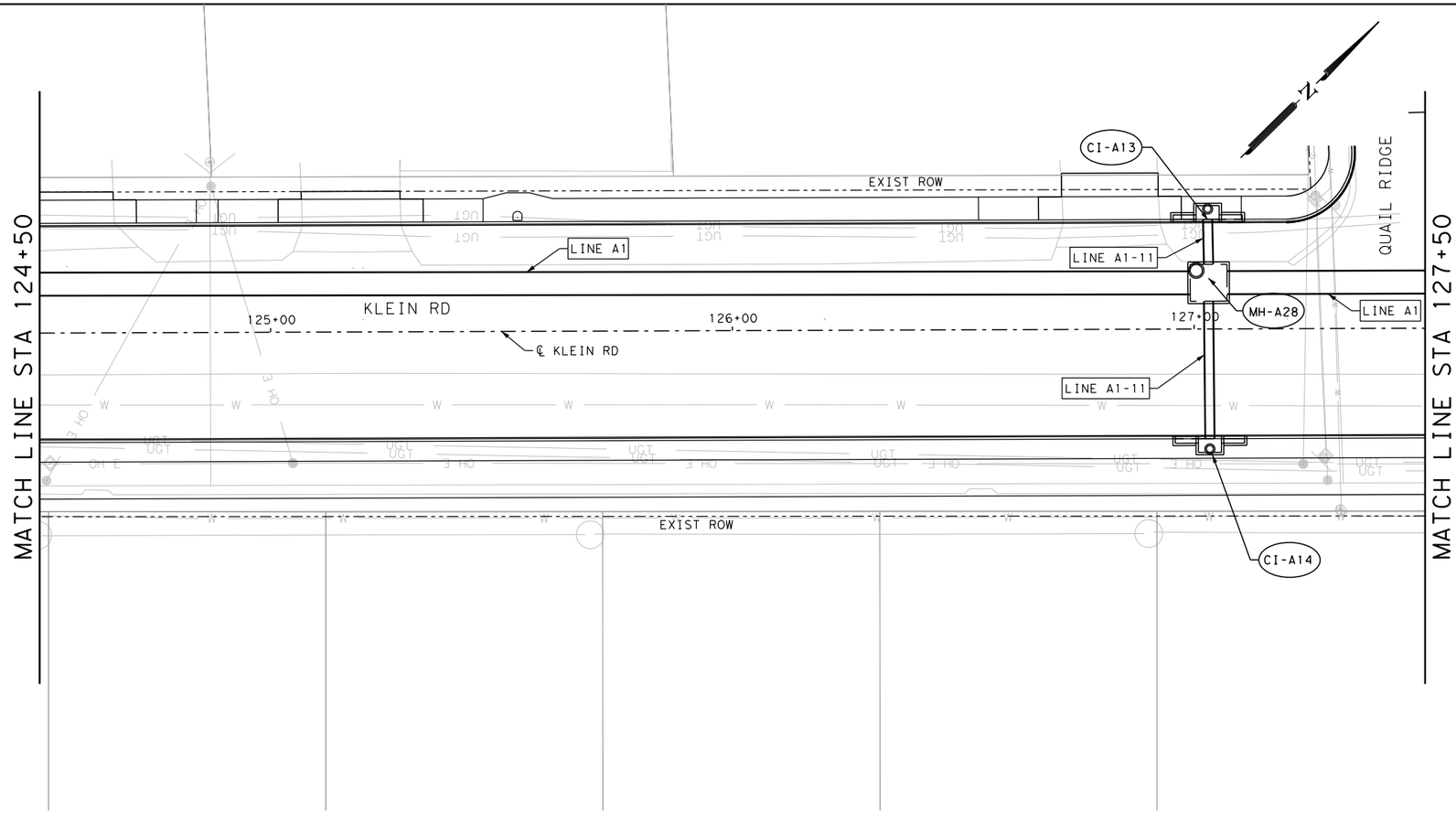

ITEM	DESCRIPTION	UNIT	QTY
0400-6002	STRUCT EXCAV (BOX)	CY	800.0
0400-6003	STRUCT EXCAV (PIPE)	CY	58.0
0402-6001	TRENCH EXCAVATION PROTECTION	LF	259
0462-6007	CONC BOX CULV (5 FT X 3 FT)	LF	219
0464-6005	RC PIPE (CL III)(24 IN)	LF	40
0465-6024	INLET (COMPL)(PCO)(5FT)(BOTH)	EA	2
0465-6077	INLET (COMPL)(PSL)(RC)(8FTX8FT)	EA	1

NOTES:
1. ALL EXISTING FEATURES ARE SHOWN SCREENED BACK
2. THE EXISTENCE AND LOCATIONS OF ALL UNDERGROUND UTILITIES AND DRAINAGE STRUCTURES INDICATED IN THE PLANS ARE TAKEN FROM THE BEST RECORDS AVAILABLE AND ARE NOT GUARANTEED TO BE ACCURATE. CONTRACTOR SHALL VERIFY ACTUAL LOCATION PRIOR TO BEGINNING CONSTRUCTION.
3. INLETS AND MANHOLES TO BE GROUTED TO PROVIDE POSITIVE DRAINAGE. SUBSIDIARY TO INLET AND MANHOLE ITEMS.
4. ALL STORM DRAIN SYSTEMS TO BE INSTALLED IN ACCORDANCE WITH TXDOT ITEM 402 "TRENCH EXCAVATION PROTECTION."

LEGEND

CI-5A	CURB INLET & DESIGNATION
MH-2B	MANHOLE & DESIGNATION
AD-2B	AREA ZONE DRAIN & DESIGNATION
LINE A1-3	STORM DRAIN STRUCTURE & DESIGNATION
— · · · →	FLOW ARROW
W	EXIST WATER LINE
OH E	EXIST OVERHEAD ELECTRIC
UG T	EXIST UNDERGROUND COMMUNICATIONS

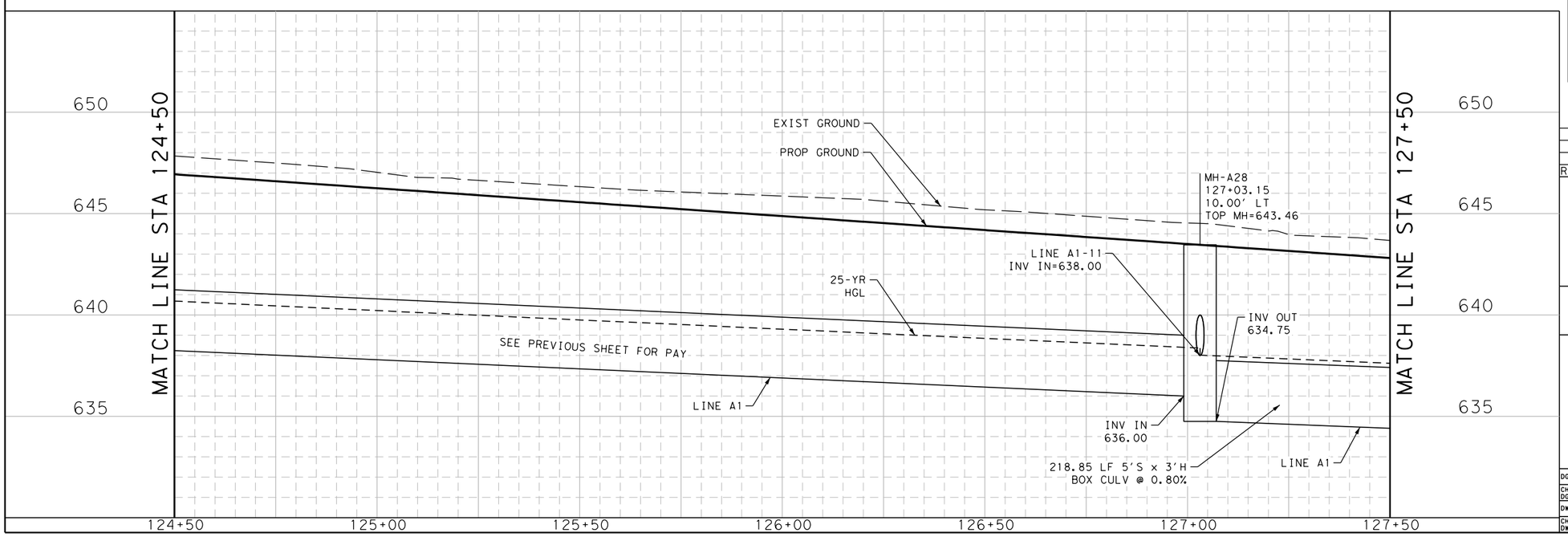

DESIGN

INTERIM REVIEW
DOCUMENT INCOMPLETE. NOT INTENDED FOR PERMIT, BIDDING OR CONSTRUCTION.
ENGINEER: TYLER PAYNE DUBE
P.E. SERIAL NO: 118612
DATE: 1/9/2020

APPROVAL

INTERIM REVIEW
DOCUMENT INCOMPLETE. NOT INTENDED FOR PERMIT, BIDDING OR CONSTRUCTION.
ENGINEER: JOHN A. TYLER
P.E. SERIAL NO: 105193
DATE: 1/9/2020

0 10 20 30 60

SCALE: PLAN 1":30' PROFILE 1":6'

REV. NO.	DATE	DESCRIPTION	BY

PAPE-DAWSON ENGINEERS
SAN ANTONIO | AUSTIN | HOUSTON | FORT WORTH | DALLAS
2000 NW LOOP 410 | SAN ANTONIO, TX 78213 | 210.375.9000
TBPE FIRM REGISTRATION #470 | TBPLS FIRM REGISTRATION #10028800

City of New Braunfels

KLEIN RD PHASE 2

DRAINAGE PLAN & PROFILE

STA 124+50 TO STA 127+50

SHEET 9 OF 17

DGN:	STATE	PROJECT NO.	ROADWAY
CHK DGN:	TEXAS	NB 18-026	KLEIN RD
DWG:	COUNTY	CITY	SHEET NO.
CHK DWG:	GUADALUPE	NEW BRAUNFELS	211

ITEM	DESCRIPTION	UNIT	QTY
0400-6002	STRUCT EXCAV (BOX)	CY	940.0
0400-6003	STRUCT EXCAV (PIPE)	CY	16.0
0402-6001	TRENCH EXCAVATION PROTECTION	LF	257
0462-6007	CONC BOX CULV (5 FT X 3 FT)	LF	247
0464-6005	RC PIPE (CL III)(24 IN)	LF	10
0465-6024	INLET (COMPL)(PCO)(5FT)(BOTH)	EA	1
0465-6077	INLET (COMPL)(PSL)(RC)(8FTX8FT)	EA	1

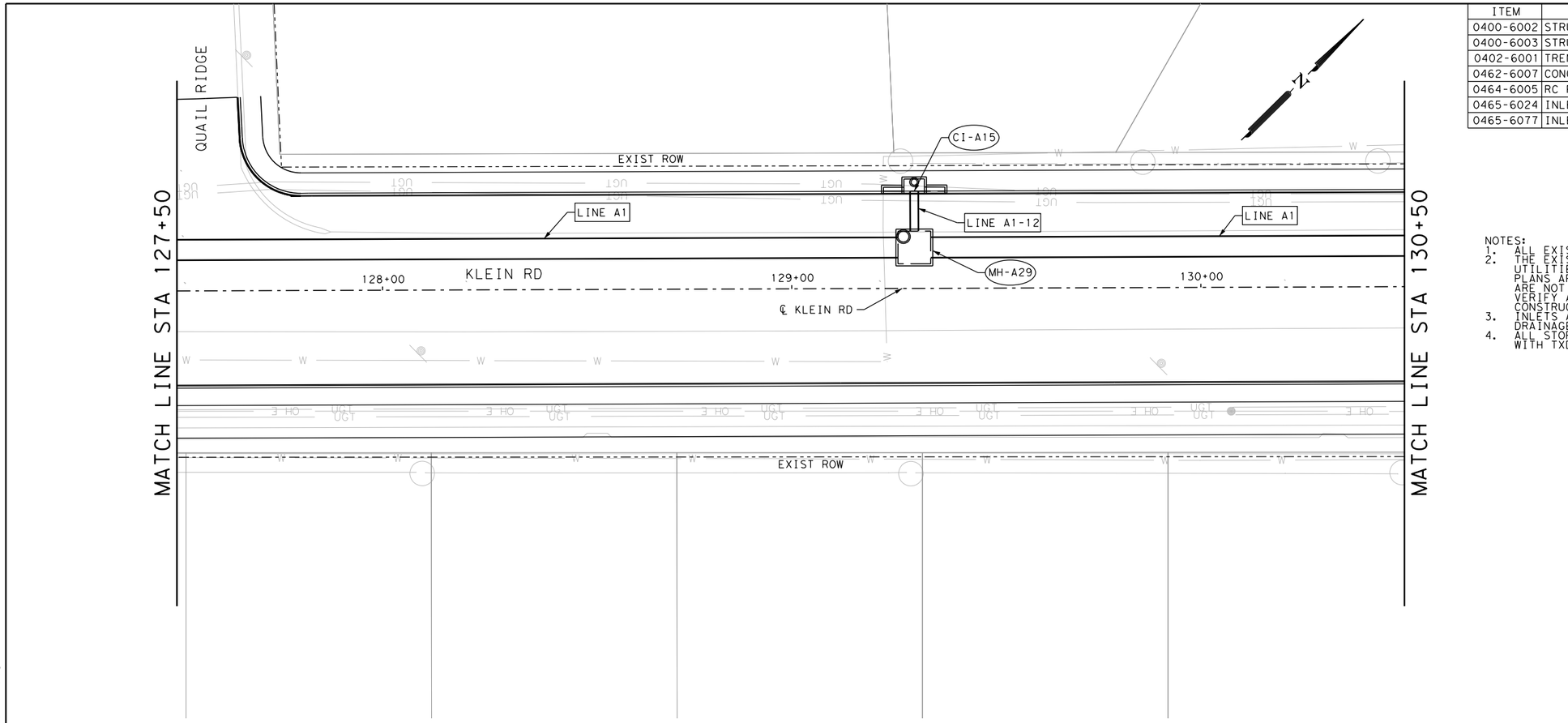

NOTES:
1. ALL EXISTING FEATURES ARE SHOWN SCREENED BACK
2. THE EXISTENCE AND LOCATIONS OF ALL UNDERGROUND UTILITIES AND DRAINAGE STRUCTURES INDICATED IN THE PLANS ARE TAKEN FROM THE BEST RECORDS AVAILABLE AND ARE NOT GUARANTEED TO BE ACCURATE. CONTRACTOR SHALL VERIFY ACTUAL LOCATION PRIOR TO BEGINNING CONSTRUCTION.
3. INLETS AND MANHOLES TO BE GROUTED TO PROVIDE POSITIVE DRAINAGE. SUBSIDIARY TO INLET AND MANHOLE ITEMS.
4. ALL STORM DRAIN SYSTEMS TO BE INSTALLED IN ACCORDANCE WITH TXDOT ITEM 402 "TRENCH EXCAVATION PROTECTION."

LEGEND

CI-5A	CURB INLET & DESIGNATION
MH-2B	MANHOLE & DESIGNATION
AD-2B	AREA ZONE DRAIN & DESIGNATION
LINE A1-3	STORM DRAIN STRUCTURE & DESIGNATION
— · · · →	FLOW ARROW
—— W ——	EXIST WATER LINE
—— OH E ——	EXIST OVERHEAD ELECTRIC
—— UG T ——	EXIST UNDERGROUND COMMUNICATIONS

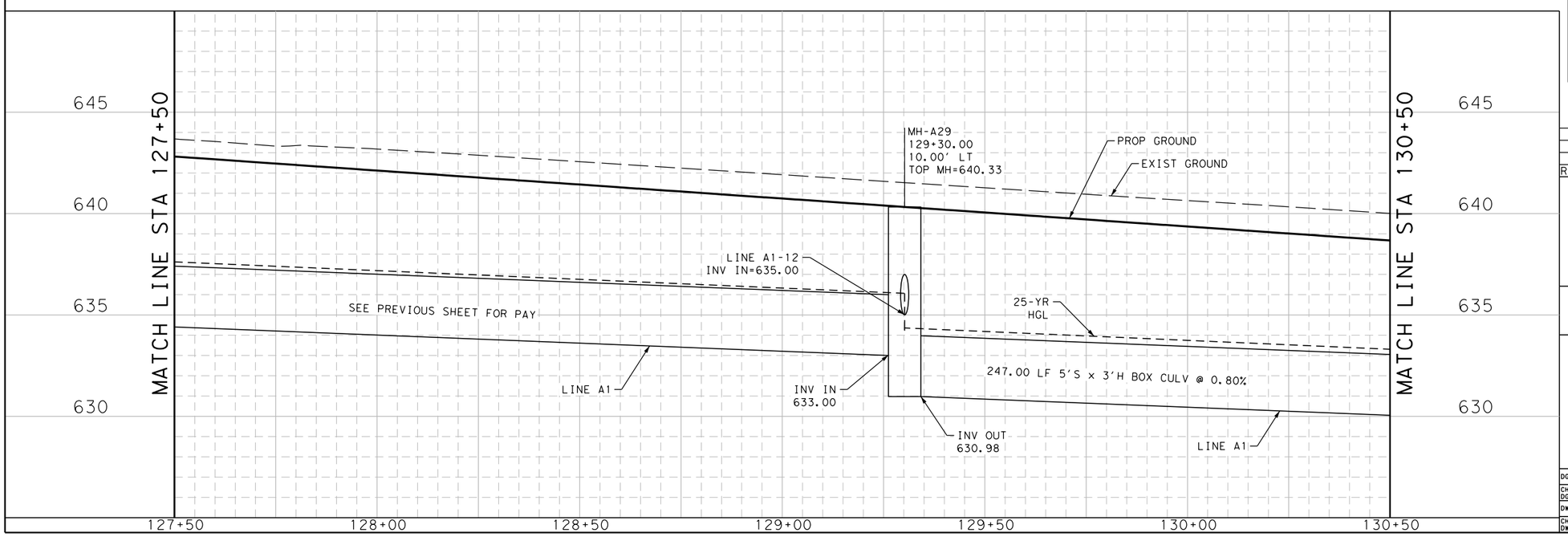

DESIGN

INTERIM REVIEW

DOCUMENT INCOMPLETE. NOT INTENDED FOR PERMIT, BIDDING OR CONSTRUCTION.
ENGINEER: TYLER PAYNE DUBE
P.E. SERIAL NO: 118612
DATE: 1/9/2020

APPROVAL

INTERIM REVIEW

DOCUMENT INCOMPLETE. NOT INTENDED FOR PERMIT, BIDDING OR CONSTRUCTION.
ENGINEER: JOHN A. TYLER
P.E. SERIAL NO: 105193
DATE: 1/9/2020

0 10 20 30 60

SCALE: PLAN 1":30' PROFILE 1":6'

REV. NO.	DATE	DESCRIPTION	BY

PAPE-DAWSON ENGINEERS

SAN ANTONIO | AUSTIN | HOUSTON | FORT WORTH | DALLAS
2000 NW LOOP 410 | SAN ANTONIO, TX 78213 | 210.375.9000
TBPE FIRM REGISTRATION #470 | TBPLS FIRM REGISTRATION #10028800

City of New Braunfels

KLEIN RD PHASE 2

DRAINAGE PLAN & PROFILE

STA 127+50 TO STA 130+50

SHEET 10 OF 17

DGN:	STATE	PROJECT NO.	ROADWAY
CHK DGN:	TEXAS	NB 18-026	KLEIN RD
DWG:	COUNTY	CITY	SHEET NO.
CHK DWG:	GUADALUPE	NEW BRAUNFELS	212

Plotted on: 1/9/2020

Design Filename: H:\projects\510\30\03\Design\Civil\Drainage\5103003_WKleinRd_DRN10.dgn

ITEM	DESCRIPTION	UNIT	QTY
0400-6002	STRUCT EXCAV (BOX)	CY	534.0
0400-6003	STRUCT EXCAV (PIPE)	CY	58.0
0402-6001	TRENCH EXCAVATION PROTECTION	LF	213
0462-6008	CONC BOX CULV (5 FT X 4 FT)	LF	173
0464-6005	RC PIPE (CL III)(24 IN)	LF	40
0465-6024	INLET (COMPL)(PCO)(5FT)(BOTH)	EA	2
0465-6077	INLET (COMPL)(PSL)(RC)(8FTX8FT)	EA	1

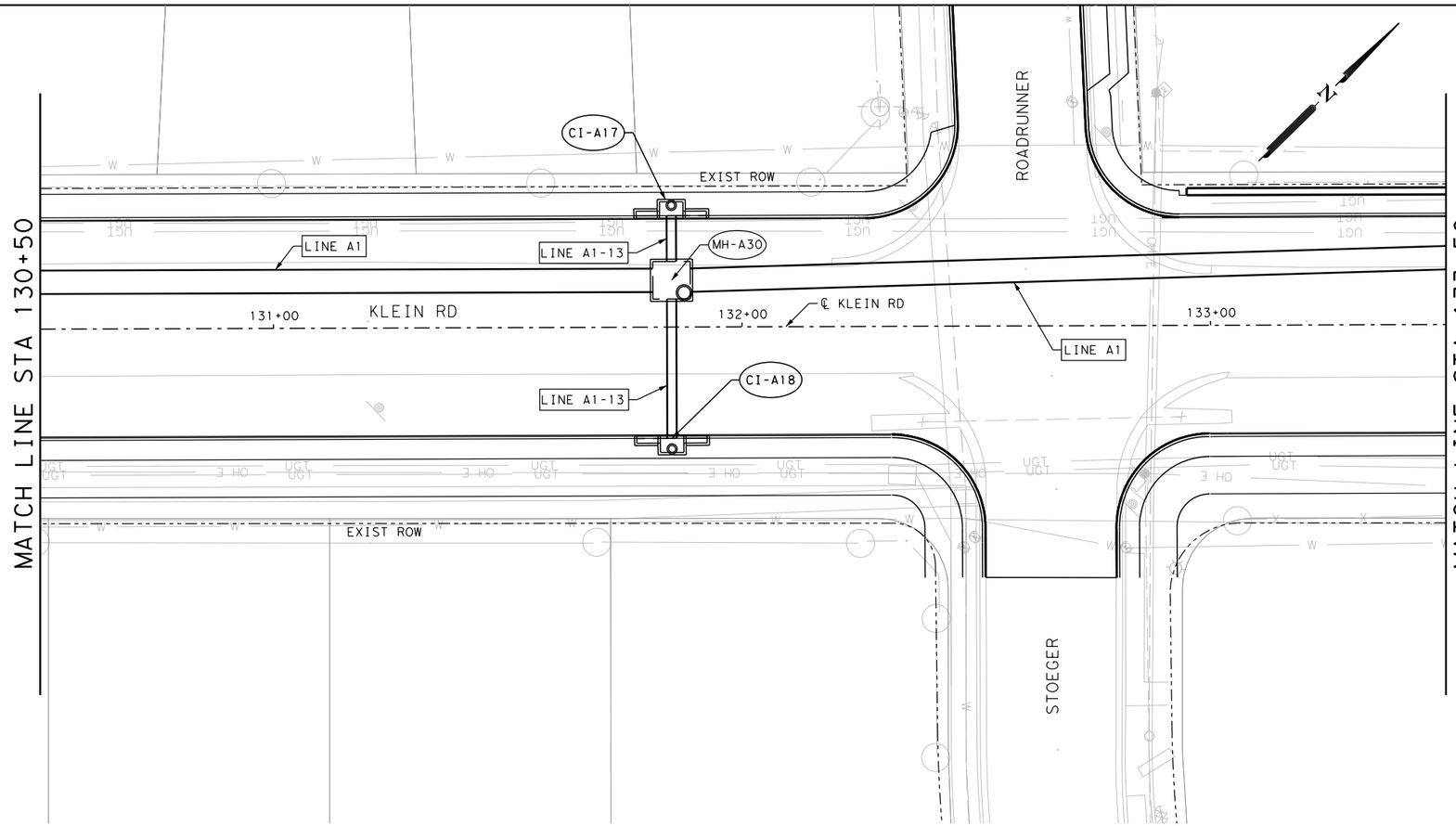

NOTES:
1. ALL EXISTING FEATURES ARE SHOWN SCREENED BACK
2. THE EXISTENCE AND LOCATIONS OF ALL UNDERGROUND UTILITIES AND DRAINAGE STRUCTURES INDICATED IN THE PLANS ARE TAKEN FROM THE BEST RECORDS AVAILABLE AND ARE NOT GUARANTEED TO BE ACCURATE. CONTRACTOR SHALL VERIFY ACTUAL LOCATION PRIOR TO BEGINNING CONSTRUCTION.
3. INLETS AND MANHOLES TO BE GROUTED TO PROVIDE POSITIVE DRAINAGE. SUBSIDIARY TO INLET AND MANHOLE ITEMS.
4. ALL STORM DRAIN SYSTEMS TO BE INSTALLED IN ACCORDANCE WITH TXDOT ITEM 402 "TRENCH EXCAVATION PROTECTION."

LEGEND

CI-5A	CURB INLET & DESIGNATION
MH-2B	MANHOLE & DESIGNATION
AD-2B	AREA ZONE DRAIN & DESIGNATION
LINE A1-3	STORM DRAIN STRUCTURE & DESIGNATION
— · · · →	FLOW ARROW
—— W ——	EXIST WATER LINE
—— OH E ——	EXIST OVERHEAD ELECTRIC
—— UG T ——	EXIST UNDERGROUND COMMUNICATIONS

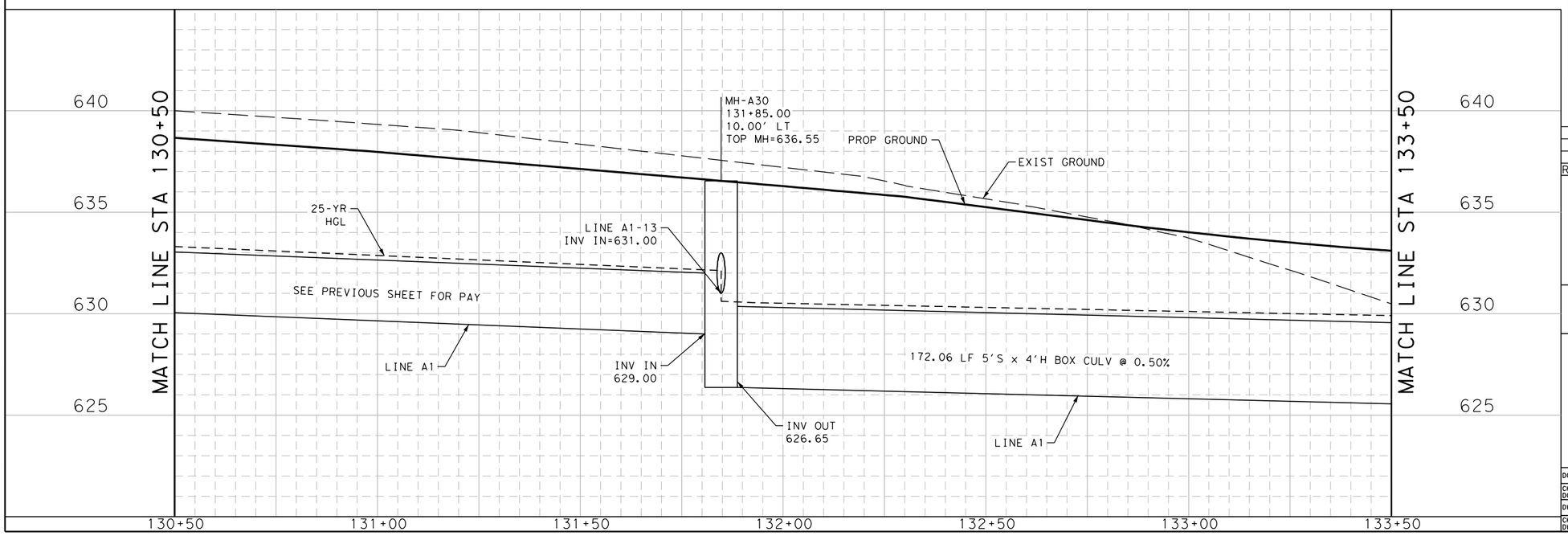

DESIGN

INTERIM REVIEW

DOCUMENT INCOMPLETE. NOT INTENDED FOR PERMIT, BIDDING OR CONSTRUCTION.
ENGINEER: TYLER PAYNE DUBE
P.E. SERIAL NO: 118612
DATE: 1/9/2020

APPROVAL

INTERIM REVIEW

DOCUMENT INCOMPLETE. NOT INTENDED FOR PERMIT, BIDDING OR CONSTRUCTION.
ENGINEER: JOHN A. TYLER
P.E. SERIAL NO: 105193
DATE: 1/9/2020

0 10 20 30 60

SCALE: PLAN 1":30' PROFILE 1":6'

REV. NO.	DATE	DESCRIPTION	BY

PAPE-DAWSON ENGINEERS

SAN ANTONIO | AUSTIN | HOUSTON | FORT WORTH | DALLAS
2000 NW LOOP 410 | SAN ANTONIO, TX 78213 | 210.375.9000
TBPE FIRM REGISTRATION #470 | TBPLS FIRM REGISTRATION #10028800

City of New Braunfels

KLEIN RD PHASE 2

DRAINAGE PLAN & PROFILE

STA 130+50 TO STA 133+50

SHEET 11 OF 17

DGN:	STATE	PROJECT NO.	ROADWAY
CHK DGN:	TEXAS	NB 18-026	KLEIN RD
DWG:	COUNTY	CITY	SHEET NO.
CHK DWG:	GUADALUPE	NEW BRAUNFELS	213

Plotted on: 1/9/2020

Design Filename: H:\projects\510\30\03\Design\Civil\Drainage\5103003_WKleinRd_DRN11.dgn

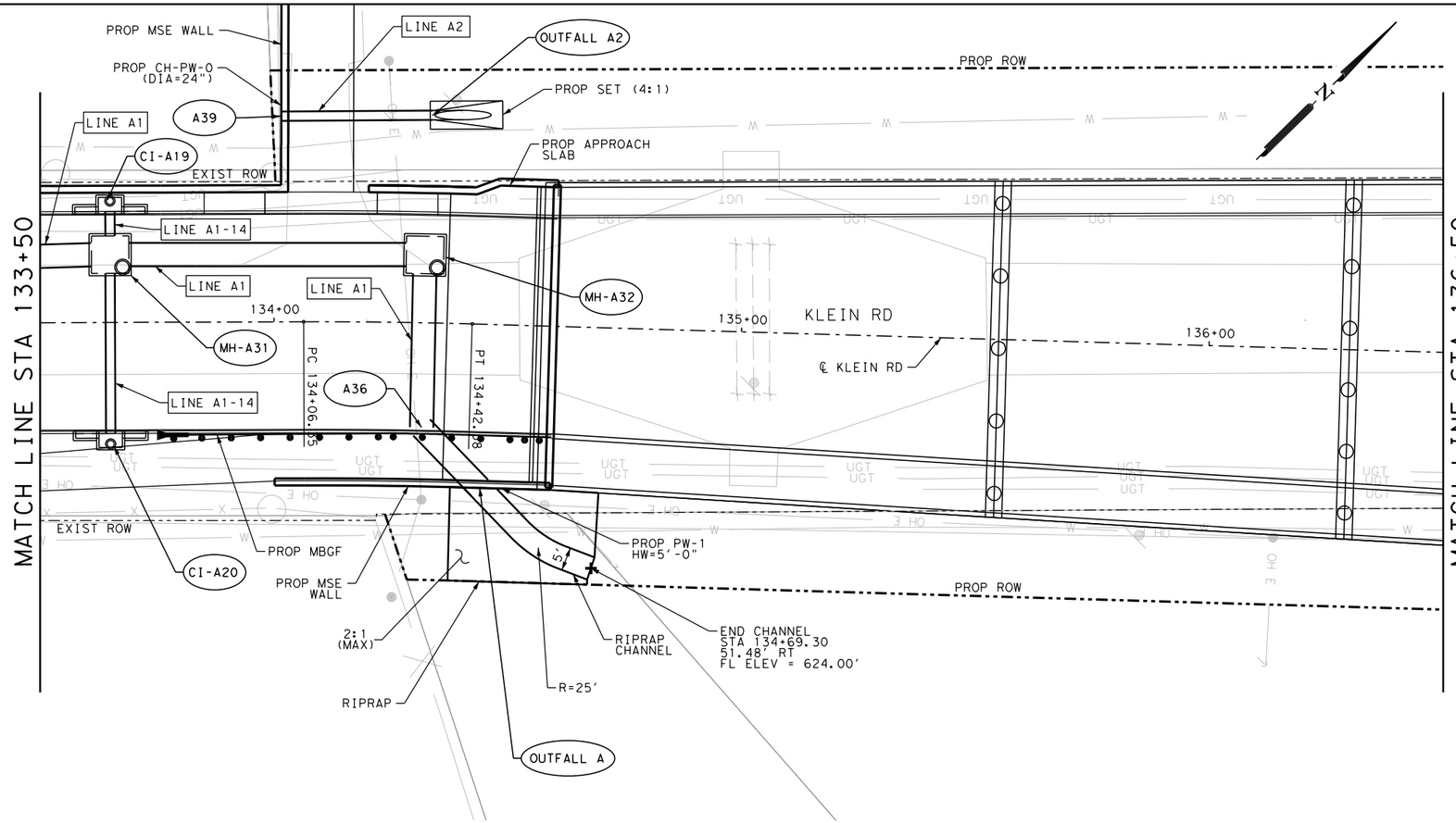

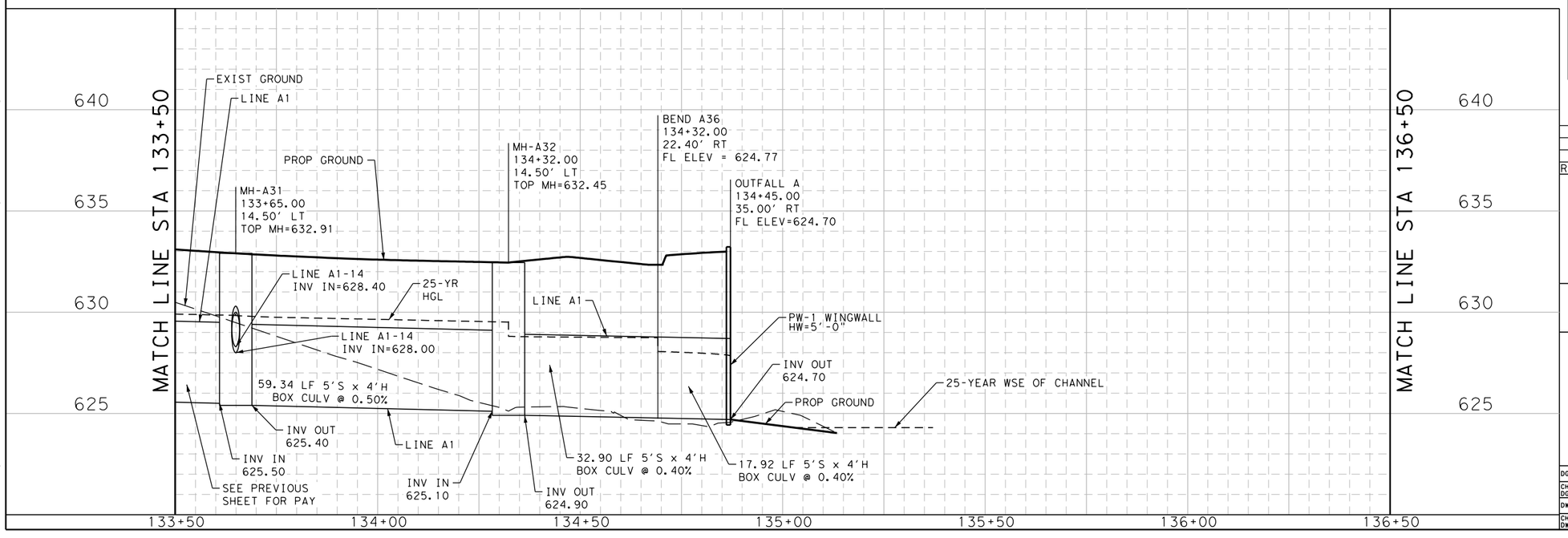

ITEM	DESCRIPTION	UNIT	QTY
0110-6002	EXCAVATION (CHANNEL)	CY	20.0
0400-6002	STRUCT EXCAV (BOX)	CY	191.0
0400-6003	STRUCT EXCAV (PIPE)	CY	42.0
0402-6001	TRENCH EXCAVATION PROTECTION	LF	180
0432-6003	RIPRAP (CONC) (6 IN)	CY	12.0
0462-6008	CONC BOX CULV (5 FT X 4 FT)	LF	111
0464-6005	RC PIPE (CL III) (24 IN)	LF	69
0465-6024	INLET (COMPL) (PCO) (5FT) (BOTH)	EA	2
0465-6077	INLET (COMPL) (PSL) (RC) (8FTX8FT)	EA	2
0466-6097	HEADWALL (CH - PW - 0) (DIA= 24 IN)	EA	1
0466-6180	WINGWALL (PW - 1) (HW=5 FT)	EA	1
0467-6391	SET (TY II) (24 IN) (RCP) (4: 1) (P)	EA	1

NOTES:
1. ALL EXISTING FEATURES ARE SHOWN SCREENED BACK
2. THE EXISTENCE AND LOCATIONS OF ALL UNDERGROUND UTILITIES AND DRAINAGE STRUCTURES INDICATED IN THE PLANS ARE TAKEN FROM THE BEST RECORDS AVAILABLE AND ARE NOT GUARANTEED TO BE ACCURATE. CONTRACTOR SHALL VERIFY ACTUAL LOCATION PRIOR TO BEGINNING CONSTRUCTION.
3. INLETS AND MANHOLES TO BE GROUTED TO PROVIDE POSITIVE DRAINAGE. SUBSIDIARY TO INLET AND MANHOLE ITEMS.
4. ALL STORM DRAIN SYSTEMS TO BE INSTALLED IN ACCORDANCE WITH TXDOT ITEM 402 "TRENCH EXCAVATION PROTECTION."

LEGEND

- CI-5A — CURB INLET & DESIGNATION
- MH-2B — MANHOLE & DESIGNATION
- AD-2B — AREA ZONE DRAIN & DESIGNATION
- LINE A1-3 — STORM DRAIN STRUCTURE & DESIGNATION
- FLOW ARROW
- W — EXIST WATER LINE
- OH E — EXIST OVERHEAD ELECTRIC
- UG T — EXIST UNDERGROUND COMMUNICATIONS

DESIGN

INTERIM REVIEW
DOCUMENT INCOMPLETE. NOT INTENDED FOR PERMIT, BIDDING OR CONSTRUCTION.
ENGINEER: TYLER PAYNE DUBE
P.E. SERIAL NO: 118612
DATE: 1/9/2020

APPROVAL

INTERIM REVIEW
DOCUMENT INCOMPLETE. NOT INTENDED FOR PERMIT, BIDDING OR CONSTRUCTION.
ENGINEER: JOHN A. TYLER
P.E. SERIAL NO: 105193
DATE: 1/9/2020

0 10 20 30 60

SCALE: PLAN 1":30' PROFILE 1":6'

REV. NO.	DATE	DESCRIPTION	BY

PAPE-DAWSON ENGINEERS
SAN ANTONIO | AUSTIN | HOUSTON | FORT WORTH | DALLAS
2000 NW LOOP 410 | SAN ANTONIO, TX 78213 | 210.375.9000
TBPE FIRM REGISTRATION #470 | TBPLS FIRM REGISTRATION #10028800

City of New Braunfels

KLEIN RD PHASE 2

DRAINAGE PLAN & PROFILE

STA 133+50 TO STA 136+50

SHEET 12 OF 17

DGN:	STATE	PROJECT NO.	ROADWAY
CHK DGN:	TEXAS	NB 18-026	KLEIN RD
DWG:	COUNTY	CITY	SHEET NO.
CHK DWG:	GUADALUPE	NEW BRAUNFELS	214

Plotted on: 1/9/2020

Design Filename: H:\projects\510\30\03\Design\Civil\Drainage\510303_MKleinRd_DRN12.dgn

Plotted on: 1/9/2020

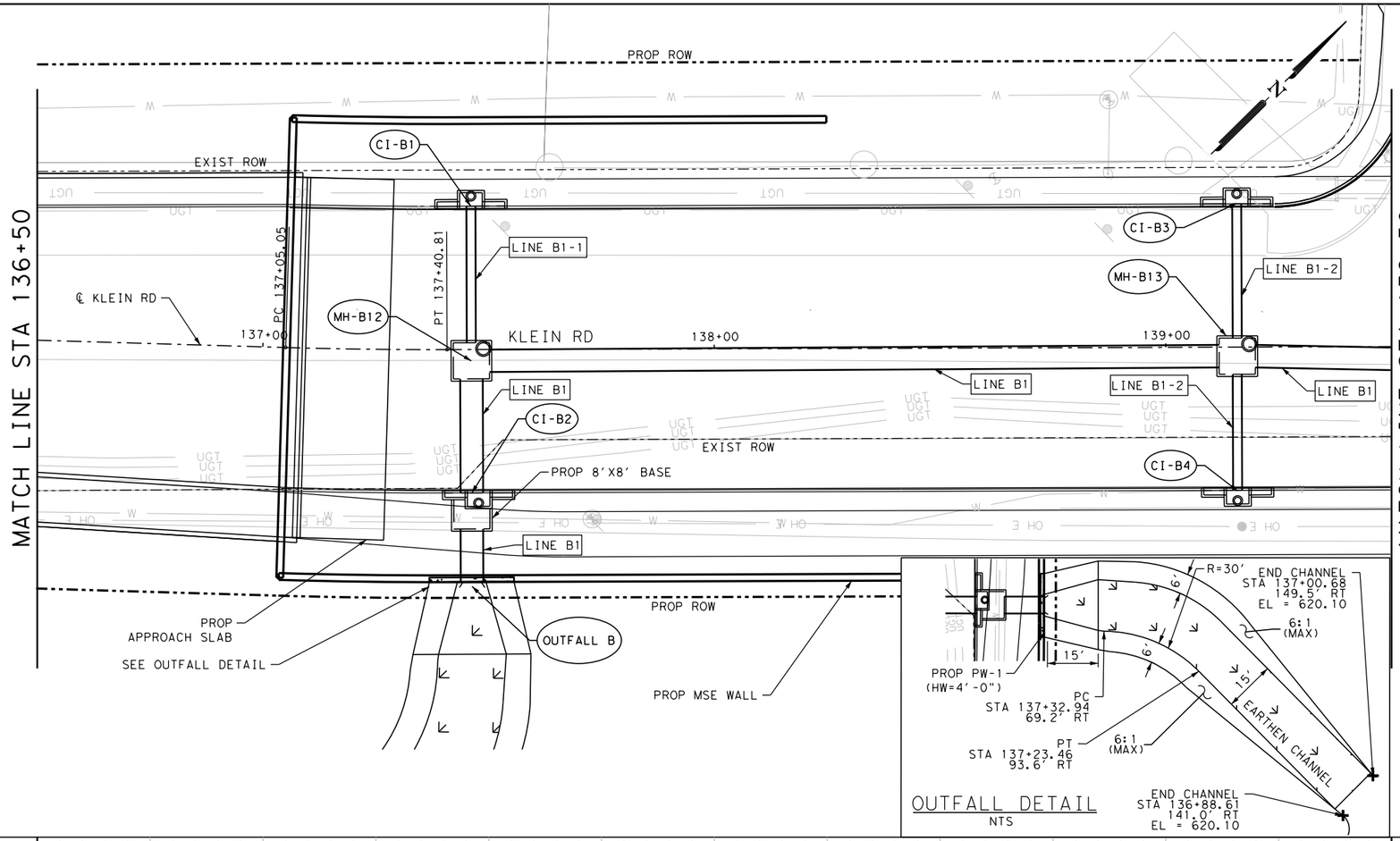

OUTFALL DETAIL
NTS

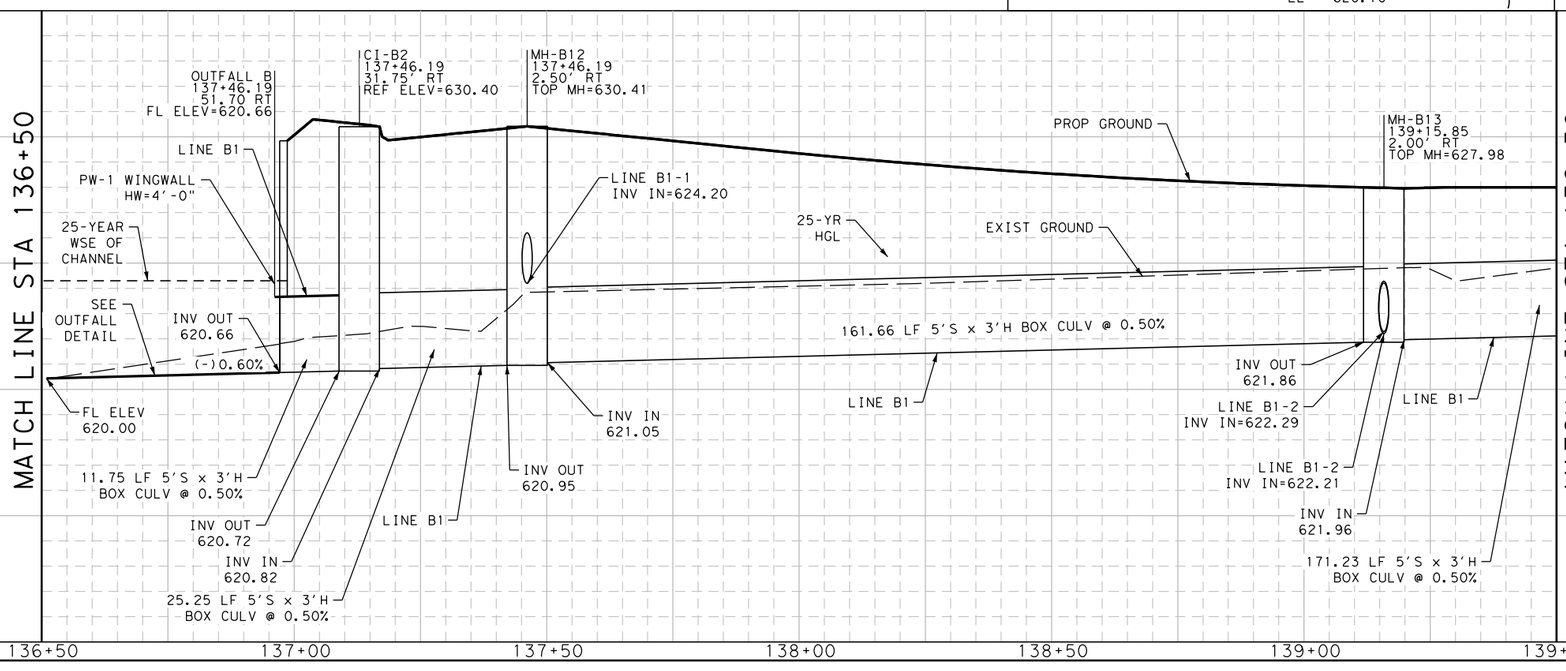

NOTES:
1. ALL EXISTING FEATURES ARE SHOWN SCREENED BACK
2. THE EXISTENCE AND LOCATIONS OF ALL UNDERGROUND UTILITIES AND DRAINAGE STRUCTURES INDICATED IN THE PLANS ARE TAKEN FROM THE BEST RECORDS AVAILABLE AND ARE NOT GUARANTEED TO BE ACCURATE. CONTRACTOR SHALL VERIFY ACTUAL LOCATION PRIOR TO BEGINNING CONSTRUCTION.
3. INLETS AND MANHOLES TO BE GROUTED TO PROVIDE POSITIVE DRAINAGE. SUBSIDIARY TO INLET AND MANHOLE ITEMS.
4. ALL STORM DRAIN SYSTEMS TO BE INSTALLED IN ACCORDANCE WITH TXDOT ITEM 402 "TRENCH EXCAVATION PROTECTION."

LEGEND

CI-5A	CURB INLET & DESIGNATION
MH-2B	MANHOLE & DESIGNATION
AD-2B	AREA ZONE DRAIN & DESIGNATION
LINE A1-3	STORM DRAIN STRUCTURE & DESIGNATION
— · · · →	FLOW ARROW
W	EXIST WATER LINE
OH E	EXIST OVERHEAD ELECTRIC
UG T	EXIST UNDERGROUND COMMUNICATIONS

DESIGN

INTERIM REVIEW
DOCUMENT INCOMPLETE. NOT INTENDED FOR PERMIT, BIDDING OR CONSTRUCTION.
ENGINEER: TYLER PAYNE DUBE
P.E. SERIAL NO: 118612
DATE: 1/9/2020

APPROVAL

INTERIM REVIEW
DOCUMENT INCOMPLETE. NOT INTENDED FOR PERMIT, BIDDING OR CONSTRUCTION.
ENGINEER: JOHN A. TYLER
P.E. SERIAL NO: 105193
DATE: 1/9/2020

0 10 20 30 60

SCALE: PLAN 1":30' PROFILE 1":6'

REV. NO.	DATE	DESCRIPTION	BY

PAPE-DAWSON ENGINEERS
SAN ANTONIO | AUSTIN | HOUSTON | FORT WORTH | DALLAS
2000 NW LOOP 410 | SAN ANTONIO, TX 78213 | 210.375.9000
TBPE FIRM REGISTRATION #470 | TBPLS FIRM REGISTRATION #10028800

City of New Braunfels

KLEIN RD PHASE 2

DRAINAGE PLAN & PROFILE

STA 136+50 TO STA 139+50

SHEET 13 OF 17

DGN:	STATE	PROJECT NO.	ROADWAY
CHK DGN:	TEXAS	NB 18-026	KLEIN RD
DWG:	COUNTY	CITY	SHEET NO.
CHK DWG:	GUADALUPE	NEW BRAUNFELS	215

Design Filename: H:\projects\510\30\03\Design\Civil\Drainage\5103003_WKleinRd_DRN13.dgn

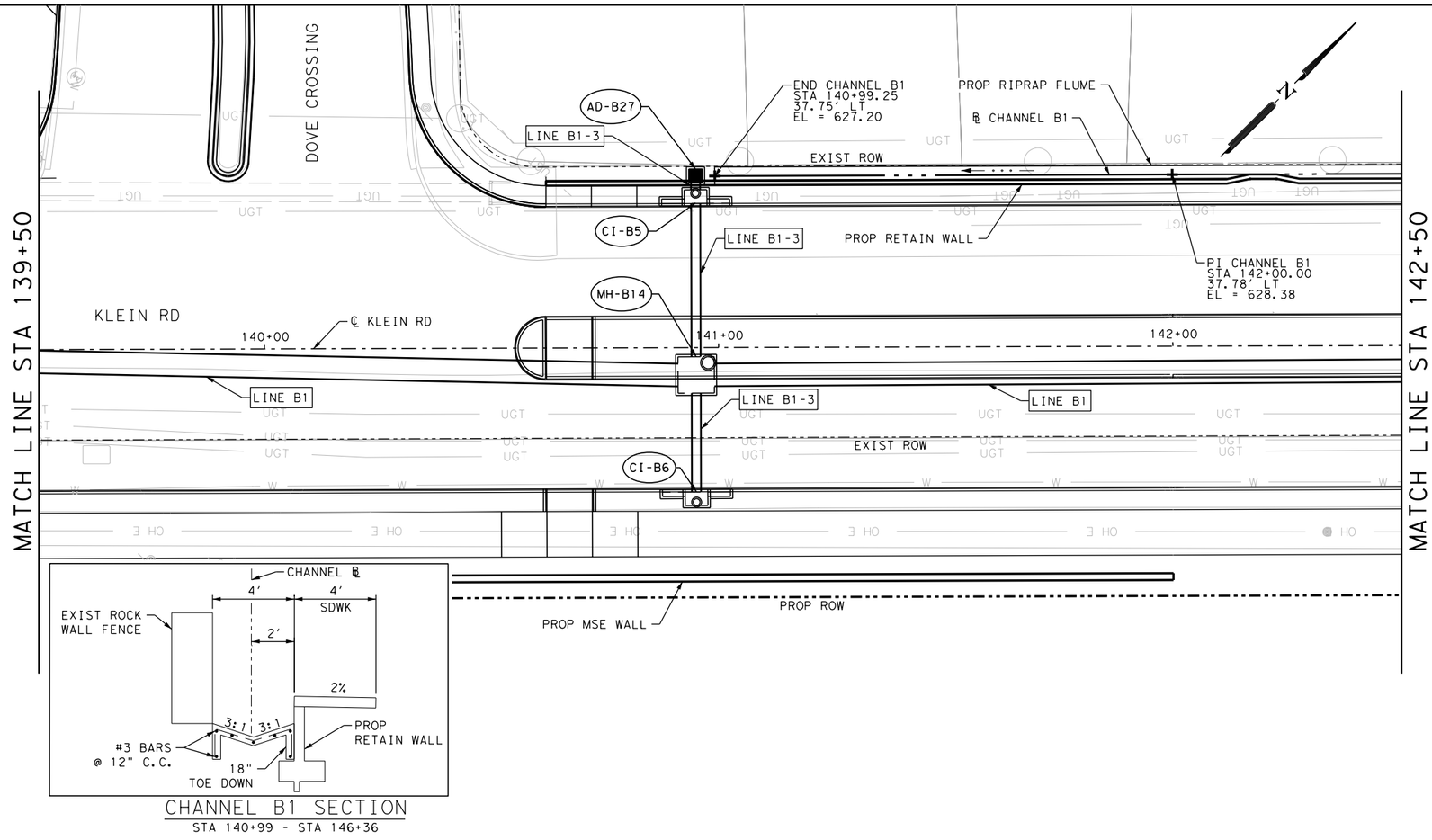

CHANNEL B1 SECTION
STA 140+99 - STA 146+36

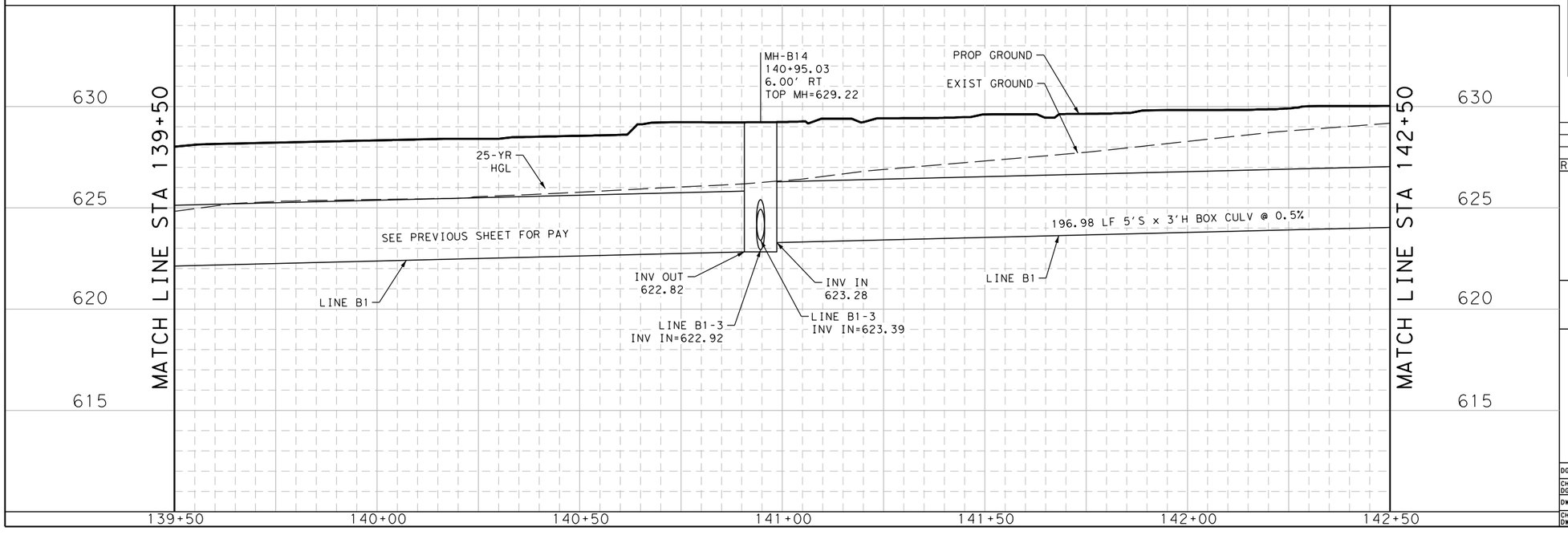

ITEM	DESCRIPTION	UNIT	QTY
0400-6002	STRUCT EXCAV (BOX)	CY	363.0
0400-6003	STRUCT EXCAV (PIPE)	CY	45.0
0402-6001	TRENCH EXCAVATION PROTECTION	LF	255
0432-6044	RIPRAP (CONC)(FLUME)	CY	14.0
0462-6007	CONC BOX CULV (5 FT X 3 FT)	LF	197
0464-6005	RC PIPE (CL III)(24 IN)	LF	58
0465-6024	INLET (COMPL)(PCO)(5FT)(BOTH)	EA	2
0465-6077	INLET (COMPL)(PSL)(RC)(8FTX8FT)	EA	1
0465-6146	INLET(COMPL)(PSL)(SFG)(3FTX3FT-3FTX3FT)	EA	1

NOTES:
1. ALL EXISTING FEATURES ARE SHOWN SCREENED BACK.
2. THE EXISTENCE AND LOCATIONS OF ALL UNDERGROUND UTILITIES AND DRAINAGE STRUCTURES INDICATED IN THE PLANS ARE TAKEN FROM THE BEST RECORDS AVAILABLE AND ARE NOT GUARANTEED TO BE ACCURATE. CONTRACTOR SHALL VERIFY ACTUAL LOCATION PRIOR TO BEGINNING CONSTRUCTION.
3. INLETS AND MANHOLES TO BE GROUTED TO PROVIDE POSITIVE DRAINAGE. SUBSIDIARY TO INLET AND MANHOLE ITEMS.
4. ALL STORM DRAIN SYSTEMS TO BE INSTALLED IN ACCORDANCE WITH TXDOT ITEM 402 "TRENCH EXCAVATION PROTECTION."

LEGEND

CI-5A	CURB INLET & DESIGNATION
MH-2B	MANHOLE & DESIGNATION
AD-2B	AREA ZONE DRAIN & DESIGNATION
LINE A1-3	STORM DRAIN STRUCTURE & DESIGNATION
— · · · →	FLOW ARROW
W	EXIST WATER LINE
OH E	EXIST OVERHEAD ELECTRIC
UG T	EXIST UNDERGROUND COMMUNICATIONS

DESIGN

INTERIM REVIEW
DOCUMENT INCOMPLETE. NOT INTENDED FOR PERMIT, BIDDING OR CONSTRUCTION.
ENGINEER: TYLER PAYNE DUBE
P.E. SERIAL NO: 118612
DATE: 1/9/2020

APPROVAL

INTERIM REVIEW
DOCUMENT INCOMPLETE. NOT INTENDED FOR PERMIT, BIDDING OR CONSTRUCTION.
ENGINEER: JOHN A. TYLER
P.E. SERIAL NO: 105193
DATE: 1/9/2020

0 10 20 30 60

SCALE: PLAN 1":30' PROFILE 1":6'

REV. NO.	DATE	DESCRIPTION	BY

PAPE-DAWSON ENGINEERS
SAN ANTONIO | AUSTIN | HOUSTON | FORT WORTH | DALLAS
2000 NW LOOP 410 | SAN ANTONIO, TX 78213 | 210.375.9000
TBPE FIRM REGISTRATION #470 | TBPLS FIRM REGISTRATION #10028800

City of New Braunfels

KLEIN RD PHASE 2

DRAINAGE PLAN & PROFILE

STA 139+50 TO STA 142+50

SHEET 14 OF 17

DGN:	STATE	PROJECT NO.	ROADWAY
CHK DGN:	TEXAS	NB 18-026	KLEIN RD
DWG:	COUNTY	CITY	SHEET NO.
CHK DWG:	GUADALUPE	NEW BRAUNFELS	216

Plotted on: 1/9/2020

Design Filename: H:\projects\510\30\03\Design\Civil\Drainage\5103003_WKleinRd_DRN14.dgn

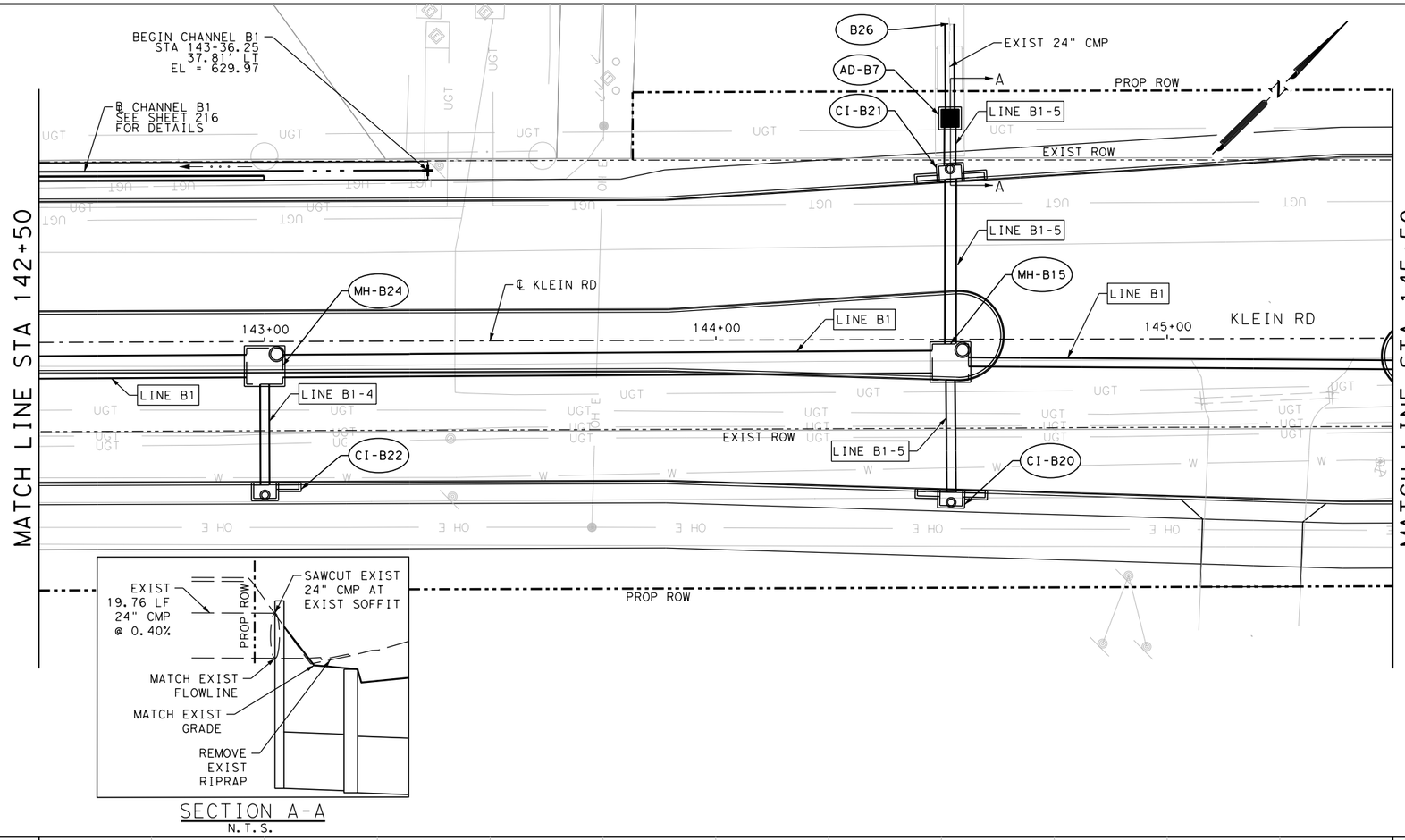

SECTION A-A
N.T.S.

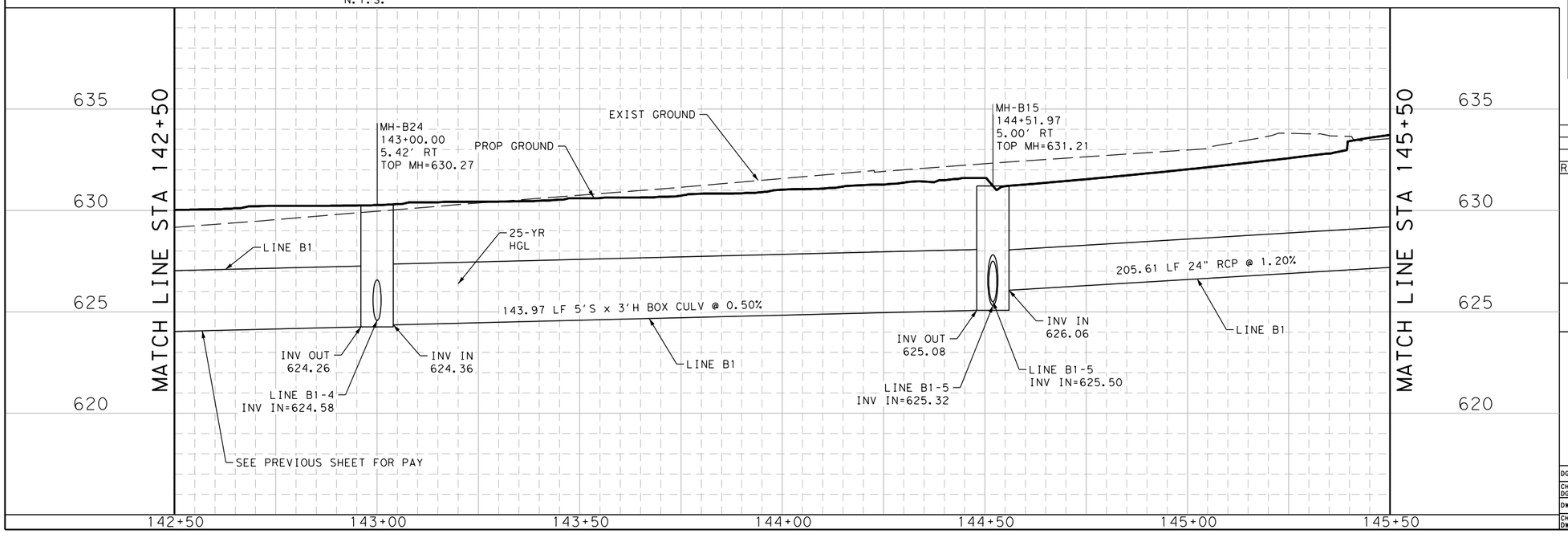

ITEM	DESCRIPTION	UNIT	QTY
0400-6002	STRUCT EXCAV (BOX)	CY	377.0
0400-6003	STRUCT EXCAV (PIPE)	CY	506.0
0402-6001	TRENCH EXCAVATION PROTECTION	LF	442
0432-6044	RIPRAP (CONC)(FLUME)	CY	8.0
0462-6007	CONC BOX CULV (5 FT X 3 FT)	LF	144
0464-6005	RC PIPE (CL III)(24 IN)	LF	253
0464-6007	RC PIPE (CL III)(30 IN)	LF	45
0465-6022	INLET (COMPL)(PCO)(5FT)(LEFT)	EA	1
0465-6024	INLET (COMPL)(PCO)(5FT)(BOTH)	EA	2
0465-6077	INLET (COMPL)(PSL)(RC)(8FTX8FT)	EA	2
0465-6147	INLET(COMPL)(PSL)(SFG)(4FTX4FT-4FTX4FT)	EA	1

NOTES:
1. ALL EXISTING FEATURES ARE SHOWN SCREENED BACK.
2. THE EXISTENCE AND LOCATIONS OF ALL UNDERGROUND UTILITIES AND DRAINAGE STRUCTURES INDICATED IN THE PLANS ARE TAKEN FROM THE BEST RECORDS AVAILABLE AND ARE NOT GUARANTEED TO BE ACCURATE. CONTRACTOR SHALL VERIFY ACTUAL LOCATION PRIOR TO BEGINNING CONSTRUCTION.
3. INLETS AND MANHOLES TO BE GROUTED TO PROVIDE POSITIVE DRAINAGE. SUBSIDIARY TO INLET AND MANHOLE ITEMS.
4. ALL STORM DRAIN SYSTEMS TO BE INSTALLED IN ACCORDANCE WITH TXDOT ITEM 402 "TRENCH EXCAVATION PROTECTION."

LEGEND

CI-5A	CURB INLET & DESIGNATION
MH-2B	MANHOLE & DESIGNATION
AD-2B	AREA ZONE DRAIN & DESIGNATION
LINE A1-3	STORM DRAIN STRUCTURE & DESIGNATION
— · · · →	FLOW ARROW
W	EXIST WATER LINE
OH E	EXIST OVERHEAD ELECTRIC
UG T	EXIST UNDERGROUND COMMUNICATIONS

DESIGN

INTERIM REVIEW

DOCUMENT INCOMPLETE. NOT INTENDED FOR PERMIT, BIDDING OR CONSTRUCTION.
ENGINEER: TYLER PAYNE DUBE
P.E. SERIAL NO: 118612
DATE: 1/9/2020

APPROVAL

INTERIM REVIEW

DOCUMENT INCOMPLETE. NOT INTENDED FOR PERMIT, BIDDING OR CONSTRUCTION.
ENGINEER: JOHN A. TYLER
P.E. SERIAL NO: 105193
DATE: 1/9/2020

0 10 20 30 60

SCALE: PLAN 1":30' PROFILE 1":6'

REV.NO.	DATE	DESCRIPTION	BY

PAPE-DAWSON ENGINEERS
SAN ANTONIO | AUSTIN | HOUSTON | FORT WORTH | DALLAS
2000 NW LOOP 410 | SAN ANTONIO, TX 78213 | 210.375.9000
TBPE FIRM REGISTRATION #470 | TBPLS FIRM REGISTRATION #10028800

City of New Braunfels

KLEIN RD PHASE 2

DRAINAGE PLAN & PROFILE

STA 142+50 TO STA 145+50

SHEET 15 OF 17

DGN:	STATE	PROJECT NO.	ROADWAY
CHK DGN:	TEXAS	NB 18-026	KLEIN RD
DWG:	COUNTY	CITY	SHEET NO.
CHK DWG:	GUADALUPE	NEW BRAUNFELS	217

Plotted on: 1/9/2020

Design Filename: H:\projects\510\30\03\Design\Civil\Drainage\5103003_WKleinRd_DRN15.dgn

ITEM	DESCRIPTION	UNIT	QTY
0400-6003	STRUCT EXCAV (PIPE)	CY	649.0
0402-6001	TRENCH EXCAVATION PROTECTION	LF	401
0464-6005	RC PIPE (CL III)(24 IN)	LF	401
0465-6024	INLET (COMPL)(PCO)(5FT)(BOTH)	EA	2
0465-6070	INLET (COMPL)(PSL)(RC)(3FTX3FT)	EA	1

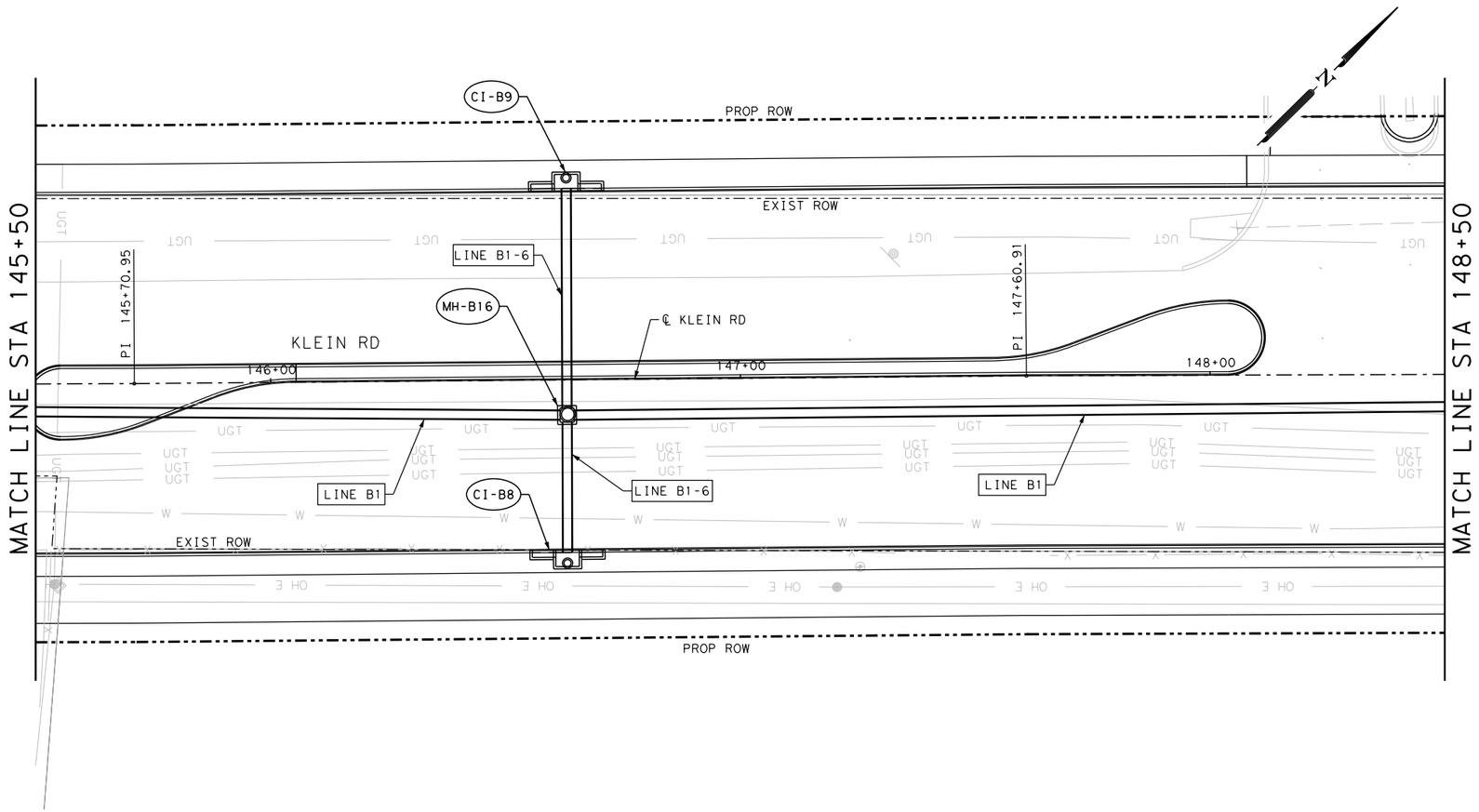

NOTES:
1. ALL EXISTING FEATURES ARE SHOWN SCREENED BACK
2. THE EXISTENCE AND LOCATIONS OF ALL UNDERGROUND UTILITIES AND DRAINAGE STRUCTURES INDICATED IN THE PLANS ARE TAKEN FROM THE BEST RECORDS AVAILABLE AND ARE NOT GUARANTEED TO BE ACCURATE. CONTRACTOR SHALL VERIFY ACTUAL LOCATION PRIOR TO BEGINNING CONSTRUCTION.
3. INLETS AND MANHOLES TO BE GROUTED TO PROVIDE POSITIVE DRAINAGE. SUBSIDIARY TO INLET AND MANHOLE ITEMS.
4. ALL STORM DRAIN SYSTEMS TO BE INSTALLED IN ACCORDANCE WITH TXDOT ITEM 402 "TRENCH EXCAVATION PROTECTION."

LEGEND

- CI-5A — CURB INLET & DESIGNATION
- MH-2B — MANHOLE & DESIGNATION
- AD-2B — AREA ZONE DRAIN & DESIGNATION
- LINE A1-3 — STORM DRAIN STRUCTURE & DESIGNATION
- FLOW ARROW
- W — EXIST WATER LINE
- OH E — EXIST OVERHEAD ELECTRIC
- UG T — EXIST UNDERGROUND COMMUNICATIONS

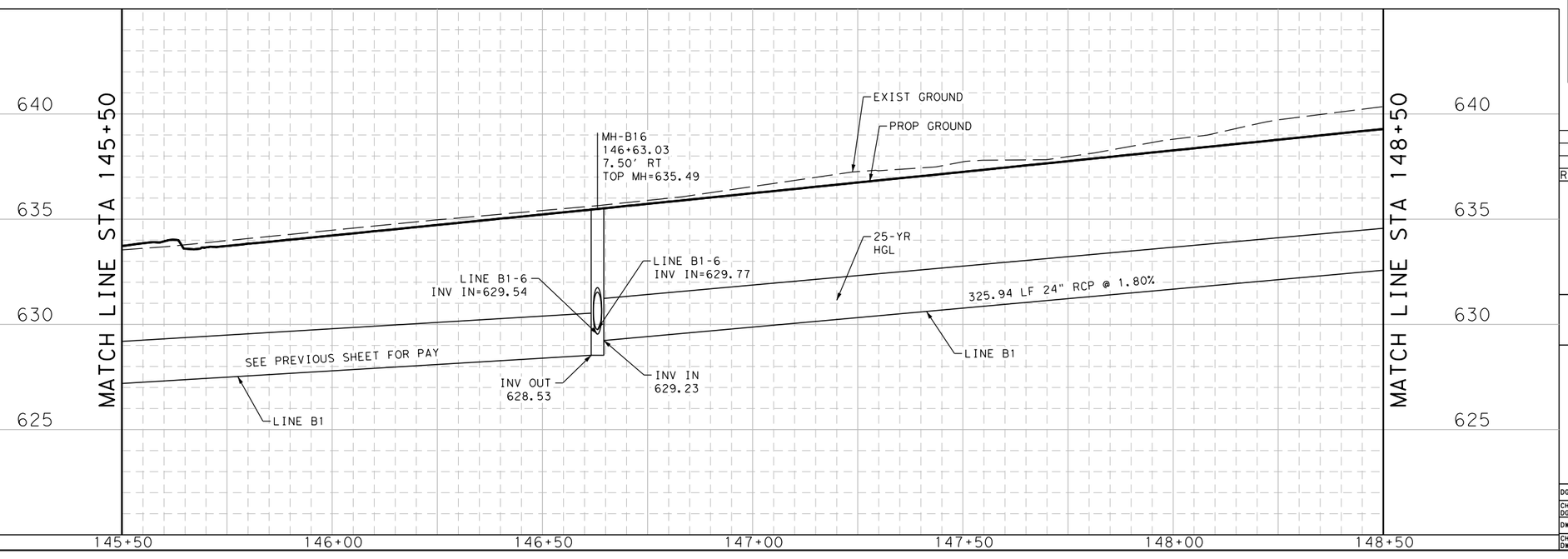

DESIGN

INTERIM REVIEW
DOCUMENT INCOMPLETE. NOT INTENDED FOR PERMIT, BIDDING OR CONSTRUCTION.
ENGINEER: TYLER PAYNE DUBE
P.E. SERIAL NO: 118612
DATE: 1/9/2020

APPROVAL

INTERIM REVIEW
DOCUMENT INCOMPLETE. NOT INTENDED FOR PERMIT, BIDDING OR CONSTRUCTION.
ENGINEER: JOHN A. TYLER
P.E. SERIAL NO: 105193
DATE: 1/9/2020

0 10 20 30 60

SCALE: PLAN 1":30' PROFILE 1":6'

REV. NO.	DATE	DESCRIPTION	BY

PAPE-DAWSON ENGINEERS
SAN ANTONIO | AUSTIN | HOUSTON | FORT WORTH | DALLAS
2000 NW LOOP 410 | SAN ANTONIO, TX 78213 | 210.375.9000
TBPE FIRM REGISTRATION #470 | TBPLS FIRM REGISTRATION #10028800

City of New Braunfels

KLEIN RD PHASE 2

DRAINAGE PLAN & PROFILE

STA 145+50 TO STA 148+50

SHEET 16 OF 17

DGN:	STATE	PROJECT NO.	ROADWAY
CHK DGN:	TEXAS	NB 18-026	KLEIN RD
DWG:	COUNTY	CITY	SHEET NO.
CHK DWG:	GUADALUPE	NEW BRAUNFELS	218

Plotted on: 1/9/2020

Design Filename: H:\projects\510\30\03\Design\Civil\Drainage\5103003_WKleinRd_DRN16.dgn

Plotted on: 1/9/2020

ITEM	DESCRIPTION	UNIT	QTY
0400-6003	STRUCT EXCAV (PIPE)	CY	205.0
0402-6001	TRENCH EXCAVATION PROTECTION	LF	196
0464-6005	RC PIPE (CL III)(24 IN)	LF	196
0465-6024	INLET (COMPL)(PCO)(5FT)(BOTH)	EA	3
0465-6070	INLET (COMPL)(PSL)(RC)(3FTX3FT)	EA	2

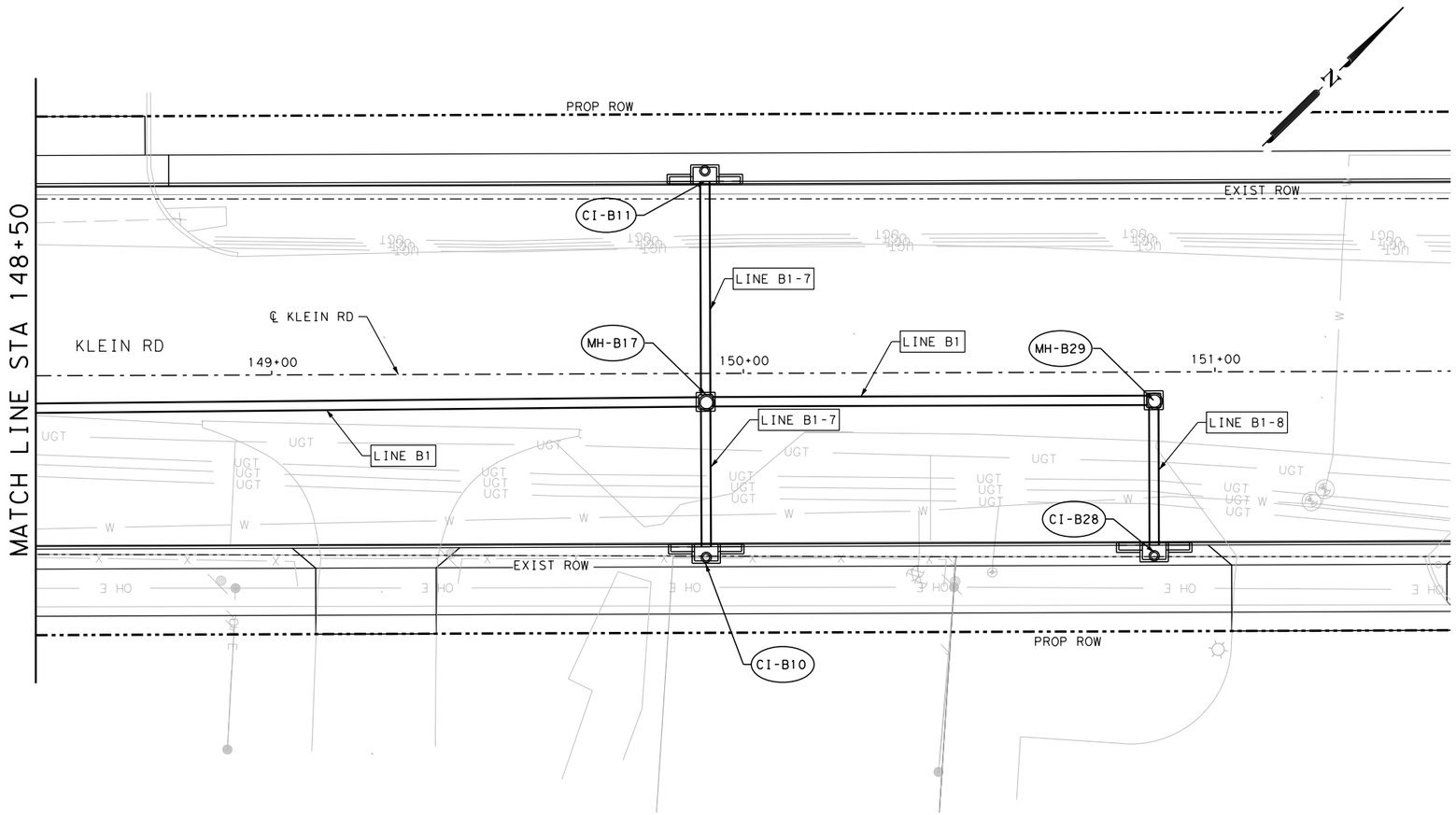

NOTES:
1. ALL EXISTING FEATURES ARE SHOWN SCREENED BACK
2. THE EXISTENCE AND LOCATIONS OF ALL UNDERGROUND UTILITIES AND DRAINAGE STRUCTURES INDICATED IN THE PLANS ARE TAKEN FROM THE BEST RECORDS AVAILABLE AND ARE NOT GUARANTEED TO BE ACCURATE. CONTRACTOR SHALL VERIFY ACTUAL LOCATION PRIOR TO BEGINNING CONSTRUCTION.
3. INLETS AND MANHOLES TO BE GROUTED TO PROVIDE POSITIVE DRAINAGE. SUBSIDIARY TO INLET AND MANHOLE ITEMS.
4. ALL STORM DRAIN SYSTEMS TO BE INSTALLED IN ACCORDANCE WITH TXDOT ITEM 402 "TRENCH EXCAVATION PROTECTION."

LEGEND

- CI-5A — CURB INLET & DESIGNATION
- MH-2B — MANHOLE & DESIGNATION
- AD-2B — AREA ZONE DRAIN & DESIGNATION
- LINE A1-3 — STORM DRAIN STRUCTURE & DESIGNATION
- FLOW ARROW
- W — EXIST WATER LINE
- OH E — EXIST OVERHEAD ELECTRIC
- UG T — EXIST UNDERGROUND COMMUNICATIONS

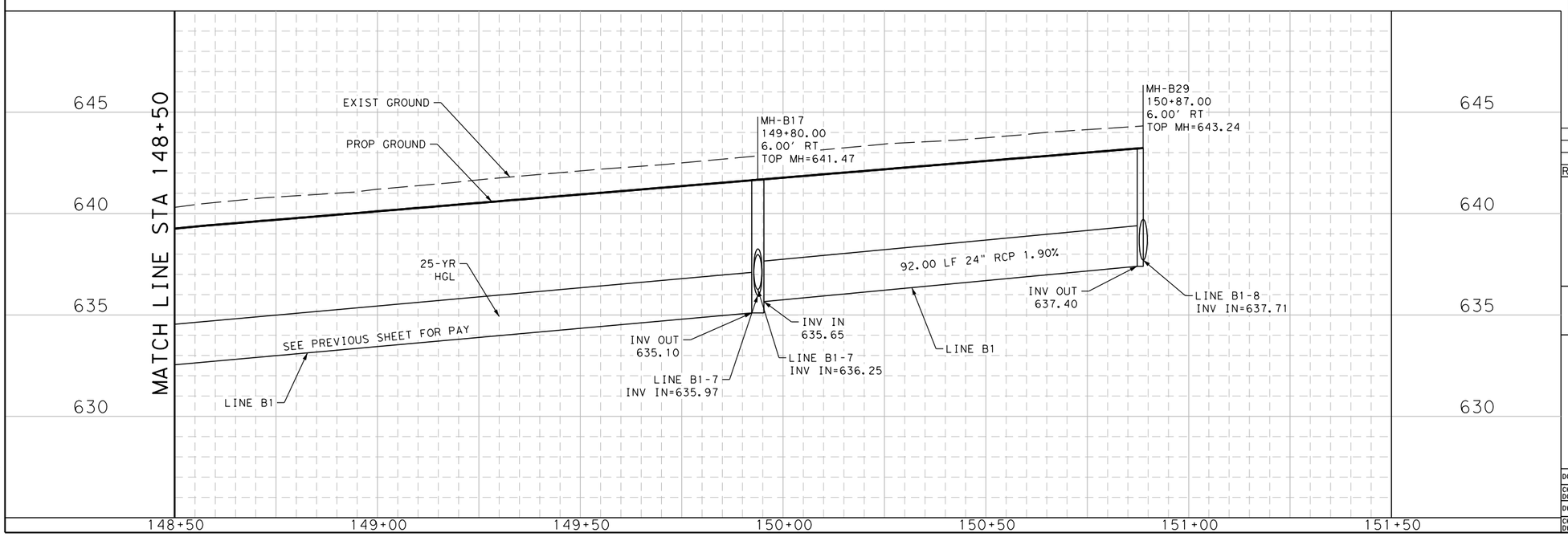

DESIGN

INTERIM REVIEW
DOCUMENT INCOMPLETE. NOT INTENDED FOR PERMIT, BIDDING OR CONSTRUCTION.
ENGINEER: TYLER PAYNE DUBE
P.E. SERIAL NO: 118612
DATE: 1/9/2020

APPROVAL

INTERIM REVIEW
DOCUMENT INCOMPLETE. NOT INTENDED FOR PERMIT, BIDDING OR CONSTRUCTION.
ENGINEER: JOHN A. TYLER
P.E. SERIAL NO: 105193
DATE: 1/9/2020

0 10 20 30 60

SCALE: PLAN 1":30' PROFILE 1":6'

REV. NO.	DATE	DESCRIPTION	BY

PAPE-DAWSON ENGINEERS
SAN ANTONIO | AUSTIN | HOUSTON | FORT WORTH | DALLAS
2000 NW LOOP 410 | SAN ANTONIO, TX 78213 | 210.375.9000
TBPE FIRM REGISTRATION #470 | TBPLS FIRM REGISTRATION #10028800

City of New Braunfels

KLEIN RD PHASE 2

DRAINAGE PLAN & PROFILE

STA 148+50 TO STA 151+50

SHEET 17 OF 17

DGN:	STATE	PROJECT NO.	ROADWAY
CHK DGN:	TEXAS	NB 18-026	KLEIN RD
DWG:	COUNTY	CITY	SHEET NO.
CHK DWG:	GUADALUPE	NEW BRAUNFELS	219

Design Filename: H:\projects\510\30\03\Design\Civil\Drainage\5103003_WKleinRd_DRN17.dgn

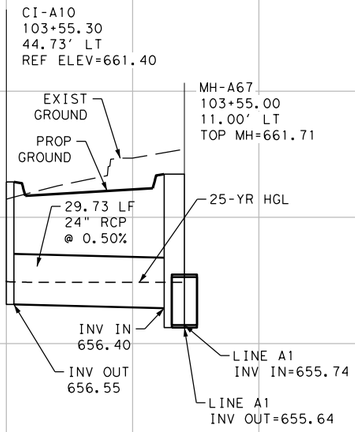

LINE A1-1

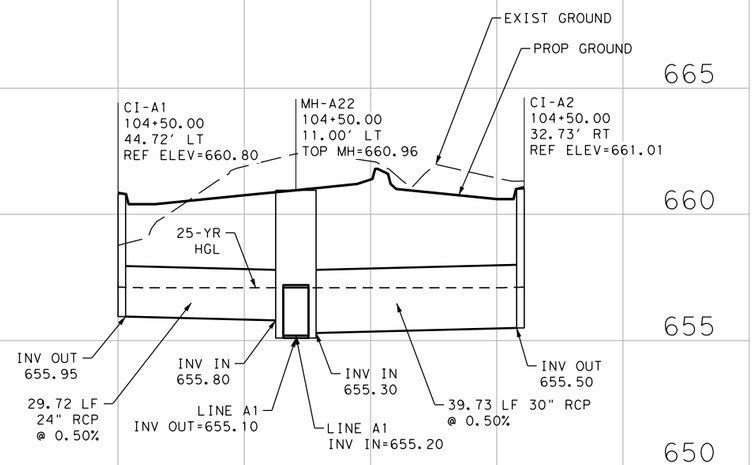

LINE A1-2

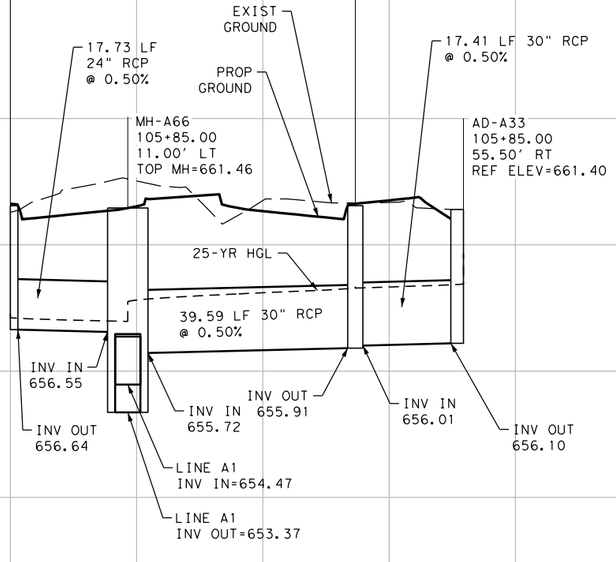

LINE A1-3

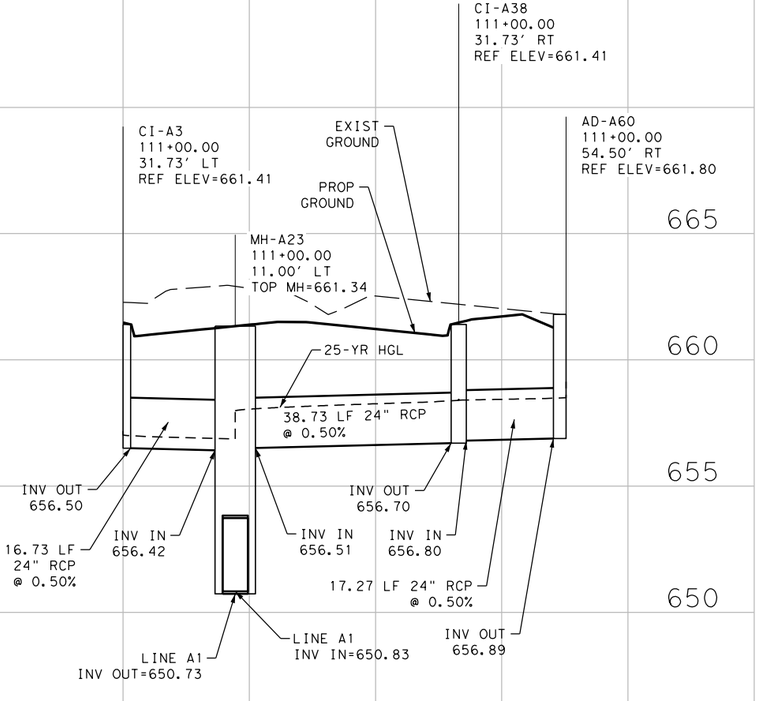

LINE A1-4

DESIGN

INTERIM REVIEW

DOCUMENT INCOMPLETE. NOT INTENDED FOR PERMIT, BIDDING OR CONSTRUCTION.
ENGINEER: TYLER PAYNE DUBE
P.E. SERIAL NO: 118612
DATE: 1/9/2020

APPROVAL

INTERIM REVIEW

DOCUMENT INCOMPLETE. NOT INTENDED FOR PERMIT, BIDDING OR CONSTRUCTION.
ENGINEER: JOHN A. TYLER
P.E. SERIAL NO: 105193
DATE: 1/9/2020

0 10 20 30 60

SCALE: PLAN 1":30' PROFILE 1":6'

REV. NO.	DATE	DESCRIPTION	BY

PAPE-DAWSON ENGINEERS
SAN ANTONIO | AUSTIN | HOUSTON | FORT WORTH | DALLAS
2000 NW LOOP 410 | SAN ANTONIO, TX 78213 | 210.375.9000
TBPE FIRM REGISTRATION #470 | TBPLS FIRM REGISTRATION #10028800

City of New Braunfels

KLEIN RD PHASE 2

STORM DRAIN LATERALS A1-1, A1-2, A1-3, A1-4

SHEET 1 OF 4

DGN:	STATE	PROJECT NO.	ROADWAY
CHK DGN:	TEXAS	NB 18-026	KLEIN RD
DWG:	COUNTY	CITY	SHEET NO.
CHK DWG:	GUADALUPE	NEW BRAUNFELS	220

Plotted on: 1/9/2020

Design Filename: H:\Projects\510\30\03\Design\Civil\Drainage\5103003_WKleinRd_LATA1.dgn

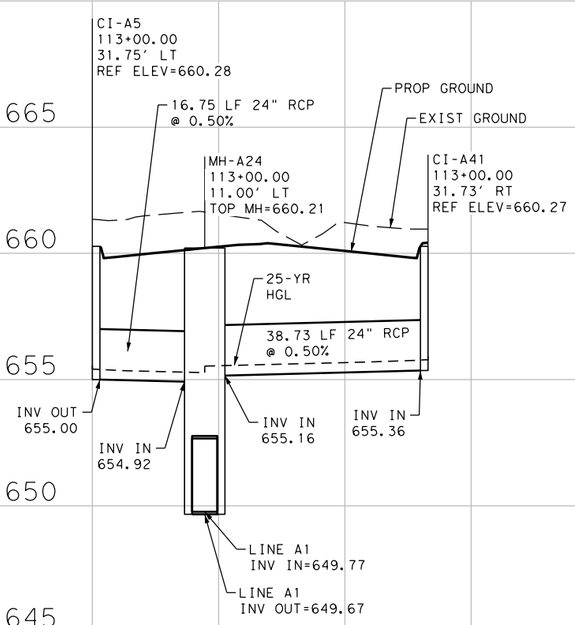

LINE A1-5

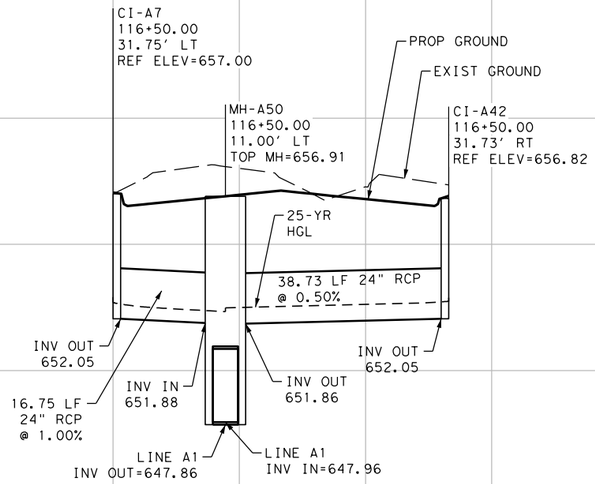

LINE A1-6

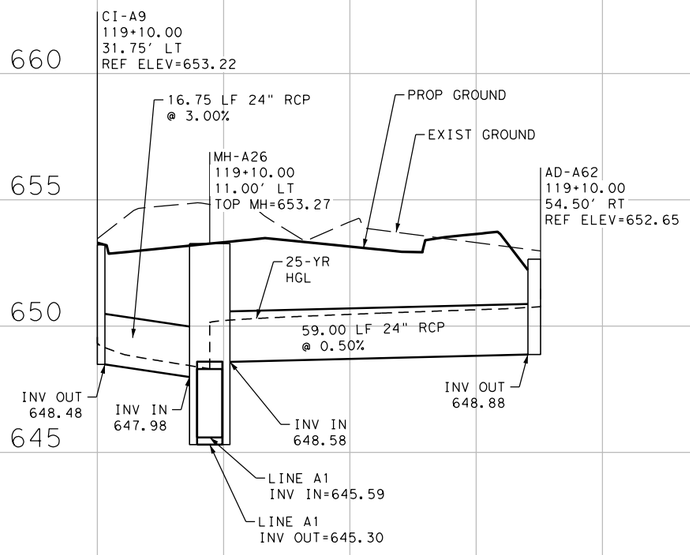

LINE A1-7

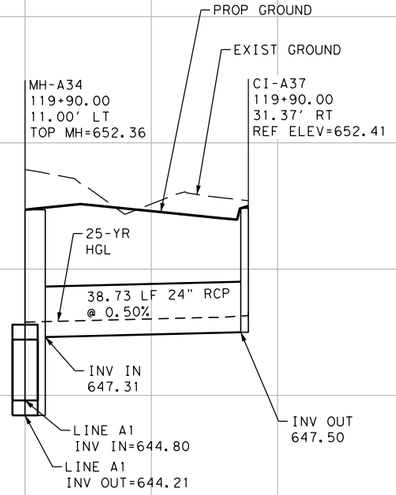

LINE A1-8

DESIGN

INTERIM REVIEW

DOCUMENT INCOMPLETE. NOT INTENDED FOR PERMIT, BIDDING OR CONSTRUCTION.
ENGINEER: TYLER PAYNE DUBE
P.E. SERIAL NO: 118612
DATE: 1/9/2020

APPROVAL

INTERIM REVIEW

DOCUMENT INCOMPLETE. NOT INTENDED FOR PERMIT, BIDDING OR CONSTRUCTION.
ENGINEER: JOHN A. TYLER
P.E. SERIAL NO: 105193
DATE: 1/9/2020

0 10 20 30 60

SCALE: PLAN 1":30' PROFILE 1":6'

REV. NO.	DATE	DESCRIPTION	BY

PAPE-DAWSON ENGINEERS
SAN ANTONIO | AUSTIN | HOUSTON | FORT WORTH | DALLAS
2000 NW LOOP 410 | SAN ANTONIO, TX 78213 | 210.375.9000
TBPE FIRM REGISTRATION #470 | TBPLS FIRM REGISTRATION #10028800

City of New Braunfels

KLEIN RD PHASE 2

STORM DRAIN LATERALS A1-5, A1-6, A1-7, A1-8

SHEET 2 OF 4

DGN:	STATE	PROJECT NO.	ROADWAY
CHK DGN:	TEXAS	NB 18-026	KLEIN RD
DWG:	COUNTY	CITY	SHEET NO.
CHK DWG:	GUADALUPE	NEW BRAUNFELS	221

Plotted on: 1/9/2020

Design Filename: H:\Projects\510\30\03\Design\Civil\Drainage\5103003_WKleinRd_LATA2.dgn

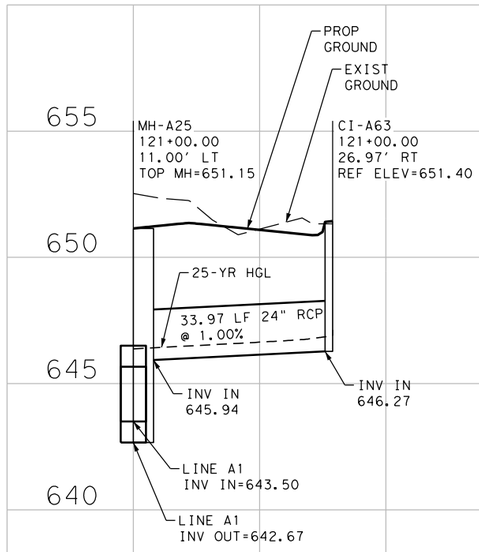

LINE A1-9

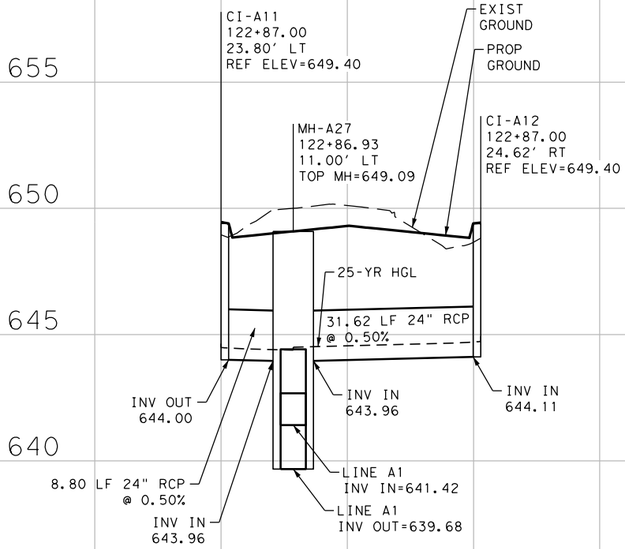

LINE A1-10

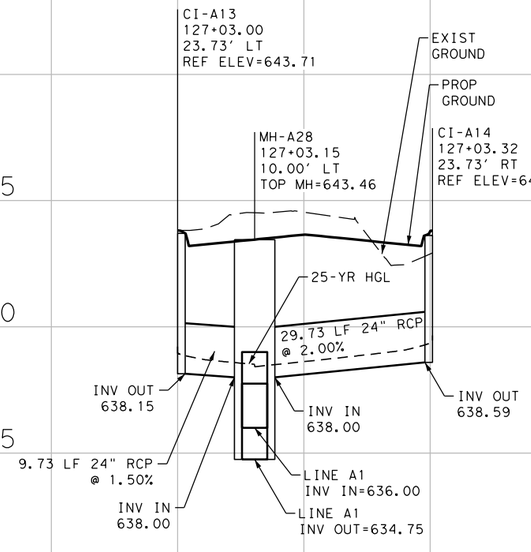

LINE A1-11

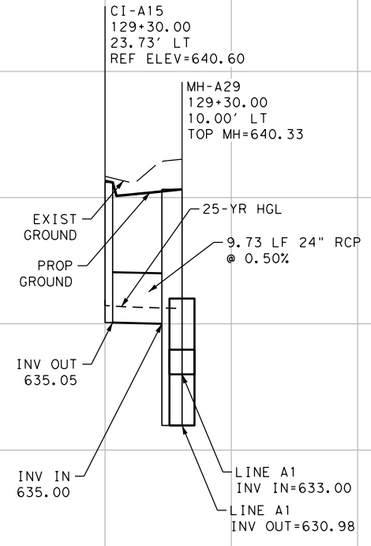

LINE A1-12

DESIGN

INTERIM REVIEW

DOCUMENT INCOMPLETE. NOT INTENDED FOR PERMIT, BIDDING OR CONSTRUCTION.
ENGINEER: TYLER PAYNE DUBE
P.E. SERIAL NO: 118612
DATE: 1/9/2020

APPROVAL

INTERIM REVIEW

DOCUMENT INCOMPLETE. NOT INTENDED FOR PERMIT, BIDDING OR CONSTRUCTION.
ENGINEER: JOHN A. TYLER
P.E. SERIAL NO: 105193
DATE: 1/9/2020

0 10 20 30 60

SCALE: PLAN 1":30' PROFILE 1":6'

REV. NO.	DATE	DESCRIPTION	BY

PAPE-DAWSON ENGINEERS
SAN ANTONIO | AUSTIN | HOUSTON | FORT WORTH | DALLAS
2000 NW LOOP 410 | SAN ANTONIO, TX 78213 | 210.375.9000
TBPE FIRM REGISTRATION #470 | TBPLS FIRM REGISTRATION #10028800

City of New Braunfels

KLEIN RD PHASE 2

STORM DRAIN LATERALS A1-9, A1-10, A1-11, A1-12

SHEET 3 OF 4

DGN:	STATE	PROJECT NO.	ROADWAY
CHK DGN:	TEXAS	NB 18-026	KLEIN RD
DWG:	COUNTY	CITY	SHEET NO.
CHK DWG:	GUADALUPE	NEW BRAUNFELS	222

Plotted on: 1/9/2020

Design Filename: H:\Projects\510\30\03\Design\Civil\Drainage\5103003_WKleinRd_LATA3.dgn

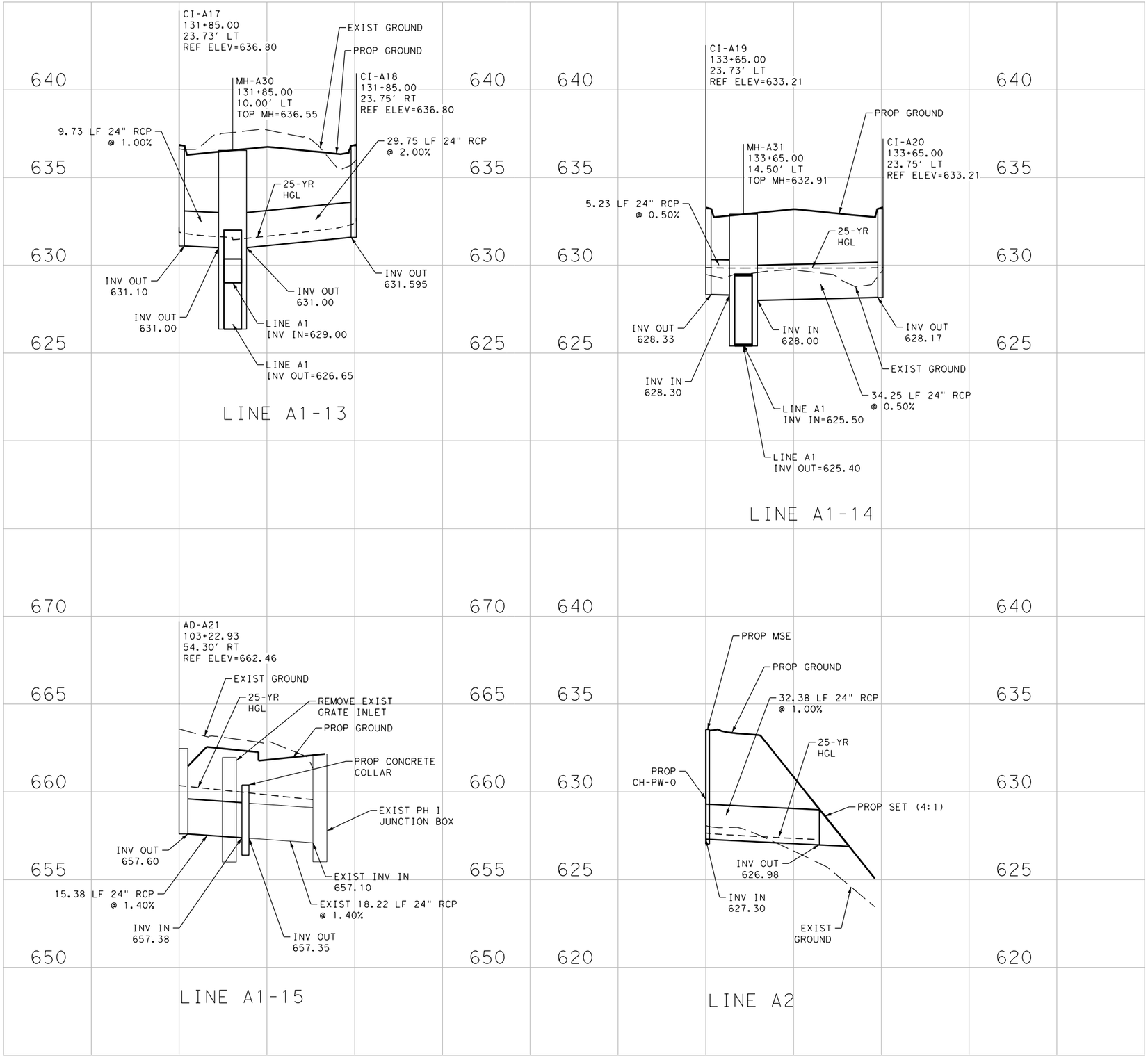

DESIGN

INTERIM REVIEW

DOCUMENT INCOMPLETE. NOT INTENDED FOR PERMIT, BIDDING OR CONSTRUCTION.
ENGINEER: TYLER PAYNE DUBE
P.E. SERIAL NO: 118612
DATE: 1/9/2020

APPROVAL

INTERIM REVIEW

DOCUMENT INCOMPLETE. NOT INTENDED FOR PERMIT, BIDDING OR CONSTRUCTION.
ENGINEER: JOHN A. TYLER
P.E. SERIAL NO: 105193
DATE: 1/9/2020

0 10 20 30 60

SCALE: PLAN 1":30' PROFILE 1":6'

REV. NO.	DATE	DESCRIPTION	BY

PAPE-DAWSON ENGINEERS
SAN ANTONIO | AUSTIN | HOUSTON | FORT WORTH | DALLAS
2000 NW LOOP 410 | SAN ANTONIO, TX 78213 | 210.375.9000
TBPE FIRM REGISTRATION #470 | TBPLS FIRM REGISTRATION #10028800

City of New Braunfels

KLEIN RD PHASE 2

STORM DRAIN LATERALS A1-13, A1-14, A1-15, A2

SHEET 4 OF 4

DGN:	STATE	PROJECT NO.	ROADWAY
CHK DGN:	TEXAS	NB 18-026	KLEIN RD
DWG:	COUNTY	CITY	SHEET NO.
CHK DWG:	GUADALUPE	NEW BRAUNFELS	223

Plotted on: 1/9/2020

Design Filename: H:\Projects\510\30\03\Design\Civil\Drainage\5103003_WKleinRd_LATA4.dgn

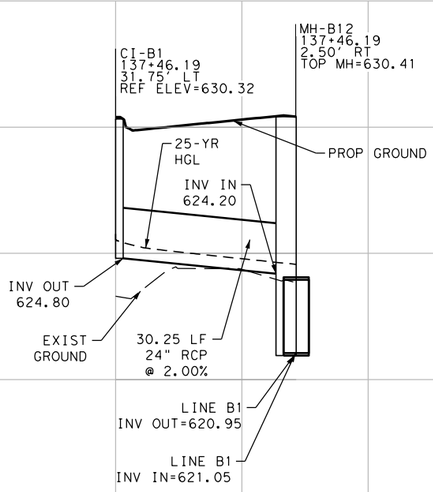

LINE B1-1

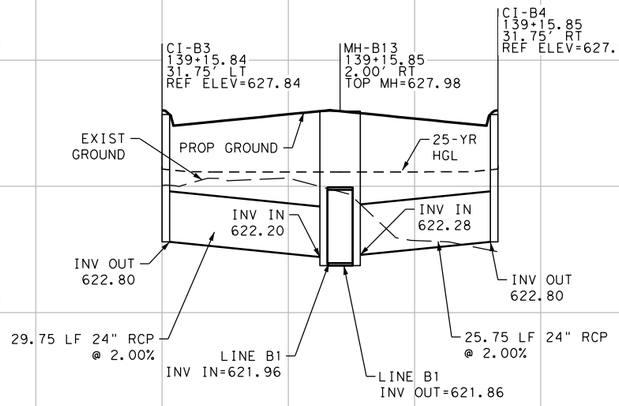

LINE B1-2

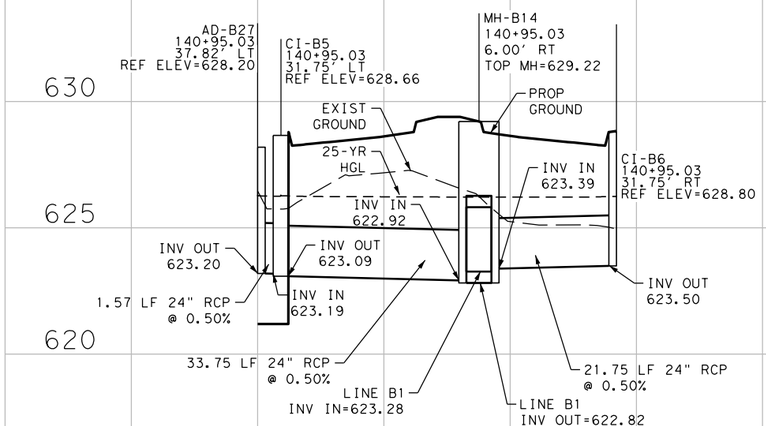

LINE B1-3

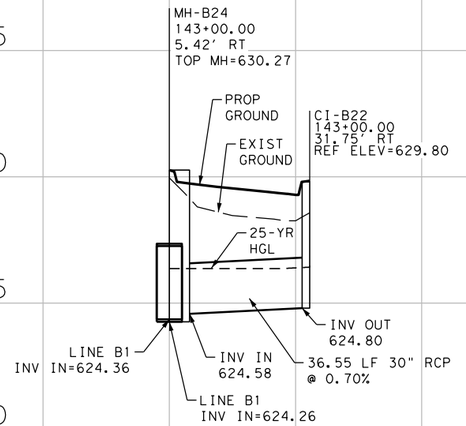

LINE B1-4

DESIGN

INTERIM REVIEW

DOCUMENT INCOMPLETE. NOT INTENDED FOR PERMIT, BIDDING OR CONSTRUCTION.
ENGINEER: TYLER PAYNE DUBE
P.E. SERIAL NO: 118612
DATE: 1/9/2020

APPROVAL

INTERIM REVIEW

DOCUMENT INCOMPLETE. NOT INTENDED FOR PERMIT, BIDDING OR CONSTRUCTION.
ENGINEER: JOHN A. TYLER
P.E. SERIAL NO: 105193
DATE: 1/9/2020

0 10 20 30 60

SCALE: PLAN 1":30' PROFILE 1":6'

REV. NO.	DATE	DESCRIPTION	BY

PAPE-DAWSON ENGINEERS
SAN ANTONIO | AUSTIN | HOUSTON | FORT WORTH | DALLAS
2000 NW LOOP 410 | SAN ANTONIO, TX 78213 | 210.375.9000
TBPE FIRM REGISTRATION #470 | TBPLS FIRM REGISTRATION #10028800

City of New Braunfels

KLEIN RD PHASE 2

STORM DRAIN LATERALS B1-1, B1-2, B1-3, B1-4

SHEET 1 OF 2

DGN:	STATE	PROJECT NO.	ROADWAY
CHK DGN:	TEXAS	NB 18-026	KLEIN RD
DWG:	COUNTY	CITY	SHEET NO.
CHK DWG:	GUADALUPE	NEW BRAUNFELS	224

Plotted on: 1/9/2020

Design Filename: H:\Projects\510\30\03\Design\Civil\Drainage\5103003_WKleinRd_LATB1.dgn

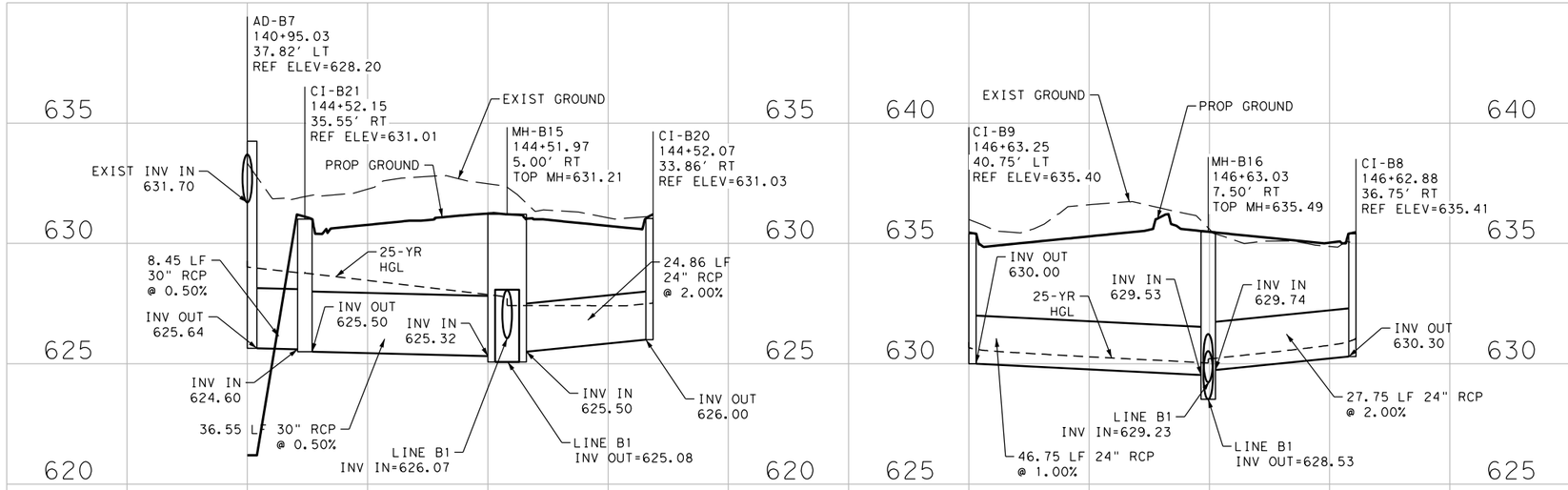

Plotted on: 1/9/2020

Design Filename: H:\Projects\510\30\03\Design\Civil\Drainage\5103003_WKleinRd_LATB2.dgn

DESIGN

INTERIM REVIEW

DOCUMENT INCOMPLETE. NOT INTENDED FOR PERMIT, BIDDING OR CONSTRUCTION.
ENGINEER: TYLER PAYNE DUBE
P.E. SERIAL NO: 118612
DATE: 1/9/2020

APPROVAL

INTERIM REVIEW

DOCUMENT INCOMPLETE. NOT INTENDED FOR PERMIT, BIDDING OR CONSTRUCTION.
ENGINEER: JOHN A. TYLER
P.E. SERIAL NO: 105193
DATE: 1/9/2020

0 10 20 30 60

SCALE: PLAN 1":30' PROFILE 1":6'

REV. NO.	DATE	DESCRIPTION	BY

PAPE-DAWSON ENGINEERS
SAN ANTONIO | AUSTIN | HOUSTON | FORT WORTH | DALLAS
2000 NW LOOP 410 | SAN ANTONIO, TX 78213 | 210.375.9000
TBPE FIRM REGISTRATION #470 | TBPLS FIRM REGISTRATION #10028800

City of New Braunfels

KLEIN RD PHASE 2

STORM DRAIN LATERALS B1-5, B1-6, B1-7, B1-8

SHEET 2 OF 2

DGN:	STATE	PROJECT NO.	ROADWAY
CHK DGN:	TEXAS	NB 18-026	KLEIN RD
DWG:	COUNTY	CITY	SHEET NO.
CHK DWG:	GUADALUPE	NEW BRAUNFELS	225

Plotted on: 1/9/2020
Design Filename: H:\Projects\510\30\03\Design\Civil\Drainage\5103003_WKleinRd_Miscellaneous Details.dgn

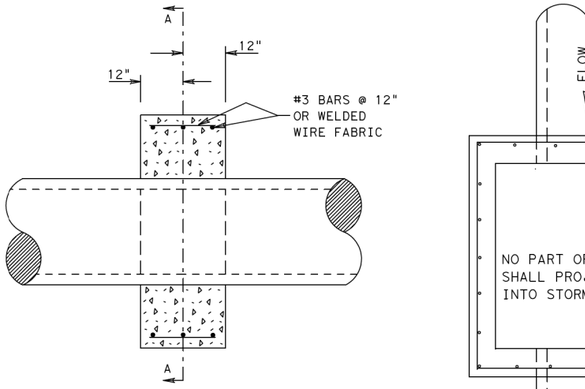

STRAIGHT DRAINAGE PIPE

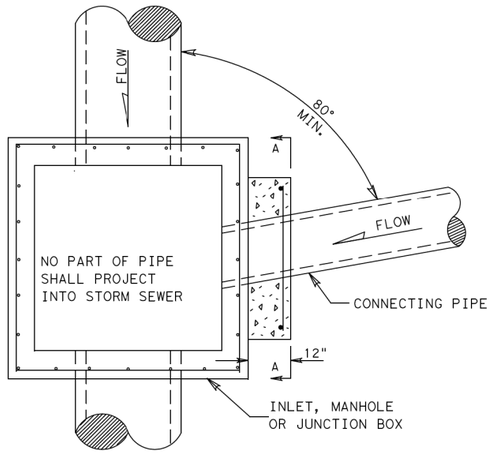

TYPICAL DRAINAGE PIPE CONNECTION WITH MANHOLE

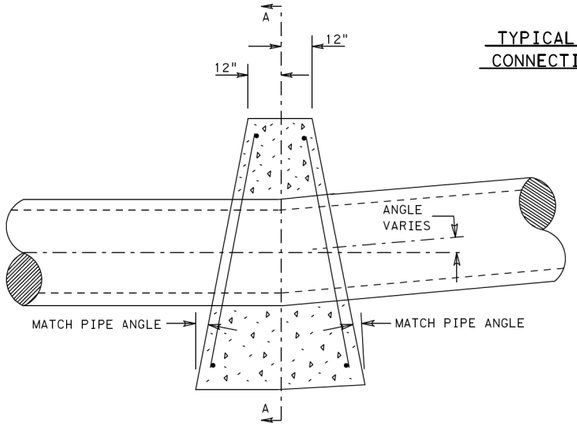

DRAINAGE PIPE W/HORIZ. & VERT. BENDS

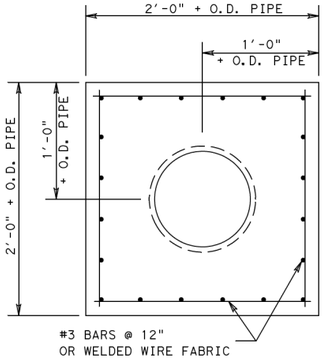

SECTION A-A

NOTES:
1. ALL CONCRETE SHALL BE CLASS "A".
2. ALL REINFORCING STEEL SHALL HAVE MINIMUM COVER OF 3 INCHES.
3. COLLAR MAY BE USED FOR CORRIGATED METAL OR REINFORCED CONCRETE PIPES.
4. PIPES MAY BE PLACED ON ANY SIDE AS INDICATED IN THE PLANS.
5. PROPOSED CONCRETE COLLAR WILL NOT BE PAID FOR DIRECTLY, BUT WILL BE SUBSIDIARY TO THE VARIOUS BID ITEMS.

CONCRETE PIPE COLLAR AND CONNECTION DETAIL

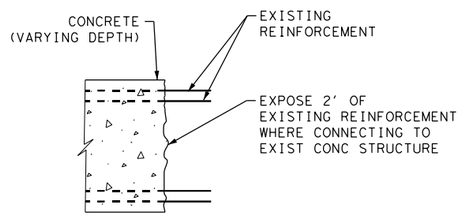

* WORK ASSOCIATED WITH THE ABOVE WORK IS NOT PAID FOR SEPARATEY BUT IS SUBSIDIARY TO ITEM 360

CONCRETE BREAKBACK DETAIL
NOT TO SCALE

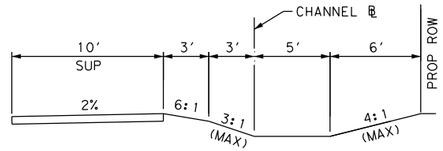

CHANNEL A1 SECTION
STA 103+71 - STA 105+80

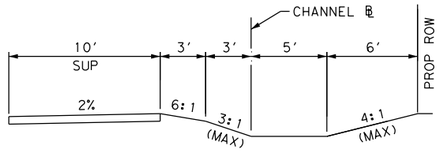

CHANNEL A2 SECTION
STA 105+88 - STA 107+38

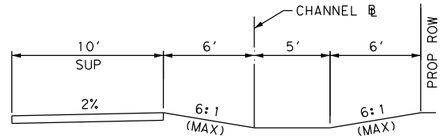

CHANNEL A3 SECTION
STA 107+57 - STA 110+94

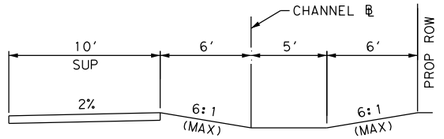

CHANNEL A4 SECTION
STA 111+06 - STA 111+63

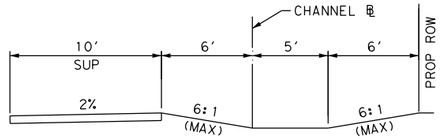

CHANNEL A5 SECTION
STA 111+88 - STA 114+33

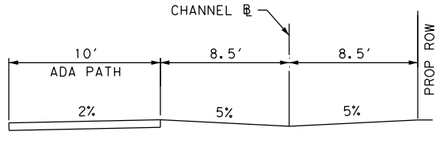

CHANNEL A6 SECTION
STA 114+33 - STA 114+74

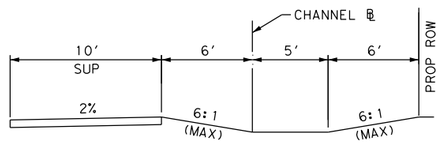

CHANNEL A7 SECTION
STA 114+74 - STA 116+80

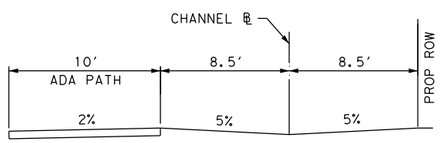

CHANNEL A8 SECTION
STA 116+80 - STA 116+94

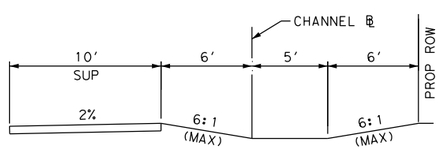

CHANNEL A9 SECTION
STA 116+94 - STA 118+97

DESIGN

INTERIM REVIEW
DOCUMENT INCOMPLETE. NOT INTENDED FOR PERMIT, BIDDING OR CONSTRUCTION.
ENGINEER: TYLER PAYNE DUBE
P.E. SERIAL NO: 118612
DATE: 1/9/2020

APPROVAL

INTERIM REVIEW
DOCUMENT INCOMPLETE. NOT INTENDED FOR PERMIT, BIDDING OR CONSTRUCTION.
ENGINEER: JOHN A. TYLER
P.E. SERIAL NO: 105193
DATE: 1/9/2020

NOT TO SCALE

REV. NO.	DATE	DESCRIPTION	BY

PAPE-DAWSON ENGINEERS
SAN ANTONIO | AUSTIN | HOUSTON | FORT WORTH | DALLAS
2000 NW LOOP 410 | SAN ANTONIO, TX 78213 | 210.375.9000
TBPE FIRM REGISTRATION #470 | TBPLS FIRM REGISTRATION #10028800

City of New Braunfels

KLEIN RD PHASE 2

MISCELLANEOUS DETAILS

DGN:	STATE	PROJECT NO.	ROADWAY
CHK DGN:	TEXAS	NB 18-026	KLEIN RD
DWG:	COUNTY	CITY	SHEET NO.
CHK DWG:	GUADALUPE	NEW BRAUNFELS	226

DISCLAIMER:
The use of this standard is governed by the "Texas Engineering Practice Act". No warranty of any kind is made by TxDOT for any purpose whatsoever. TxDOT assumes no responsibility for the conversion of this standard to other formats or for incorrect results or damages resulting from its use.

DATE: 1/9/2020 3:48:21 PM
FILE: H:\Projects\5101X30103\Design\Civil\Standards\Drainage\scpmdsts.dgn

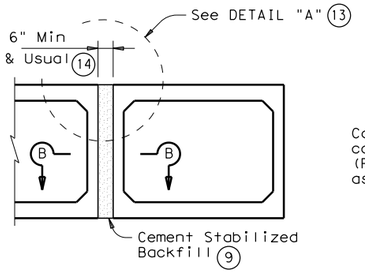

MULTIPLE UNIT PLACEMENT

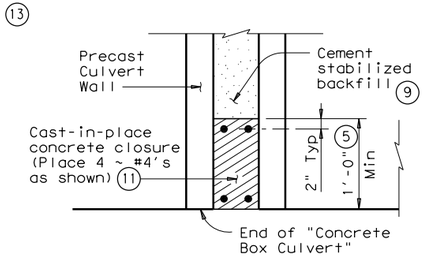

SECTION B-B

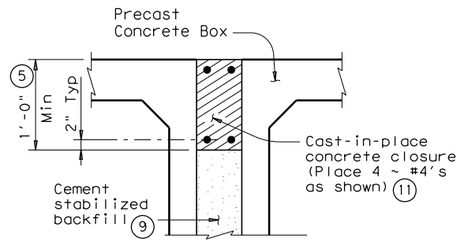

DETAIL "A" (13)

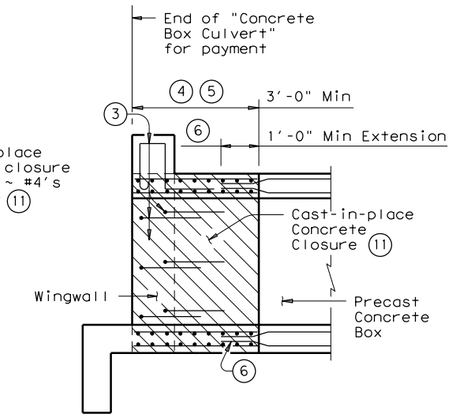

WINGWALL CONNECTION

(Also applies to Safety End Treatment)

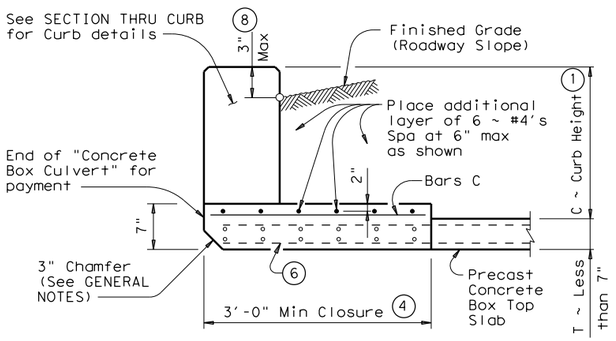

SECTION THRU TOP SLABS LESS THAN 7"

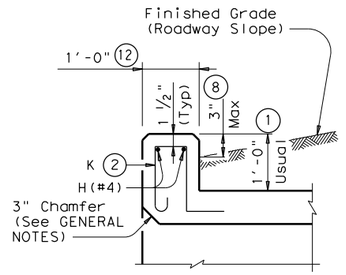

SECTION THRU CURB

(10) QUANTITIES PER FOOT OF CURB	
Reinforcing Steel	4.18 Lb
Concrete	0.037 CY

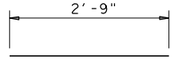

BARS C ~ #4
(Spa = 1'-0" Max)

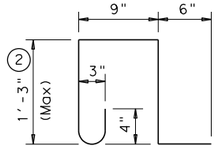

BARS K ~ #4
(Spa = 1'-0" Max)
(Length = 4'-3")

1. 0" min to 5'-0" max. Estimated curb heights are shown elsewhere in the plans. For structures with pedestrian rail, bicycle rail or curbs taller than 1'-0", refer to ECD standard. For structures with T6 traffic rail, refer to T6-CM standard. For structures with traffic rail, other than T6, refer to RAC standard.
2. For curbs less than 1'-0" high, tilt Bars K or reduce bar height as necessary to maintain cover. For curbs less than 3" high, Bars K may be omitted.
3. Curb, Wingwall or Safety End Treatment reinforcing shall extend into concrete closure. Any reinforcing that does not fit into the closure shall be bent or trimmed as necessary.
4. Cast-in-place concrete closure shall be 3'-0" min. Boxes shall be cast short or broken back in the field. All reinforcing in the closure shall be the same size and spacing as in the precast box section. Except where shown otherwise, the cast-in-place closure shall be flush with the inside and outside faces of the precast box section.
5. For multiple unit placements the length of the closure for the interior walls may be adjusted as necessary. The length of the top slab, bottom slab, and exterior wall closure shall not be less than 3'-0". See Section B-B detail when interior walls are cast full length.
6. Precast box reinforcing shall extend a minimum of 1'-0" into concrete closure (Typ).
7. Bands of reinforcing matching the inside and outside face reinforcing shall be placed in the gaps of the top and bottom slabs. A band matching the outside face reinforcing of the wall shall be placed in the gaps of the walls (placed in the outside face only). The bands shall be tack welded to the exposed reinforcing at each point of contact.
8. For vehicle safety, the following requirements must be met:
   - For structures without bridge rail, curbs shall project no more than 3" above finished grade.
   - For structures with bridge rail, curbs shall be flush with finished grade.

   Curb heights shall be reduced, if necessary, to meet the above requirements. No changes will be made in quantities and no additional compensation will be allowed for this work.
9. Cement Stabilized Backfill between boxes is considered part of the Box Culvert for payment.
10. All curb concrete and reinforcing is considered part of the Box Culvert for payment.
11. Any additional concrete and reinforcing required for the closures shall be considered as subsidiary to the Concrete Box Culvert.
12. 1'-0" typical. 2'-0" when RAC standard is referred to elsewhere in the plans.
13. For multiple unit placement with overlay, with 1 to 2 course surface treatment, or with the top slab as the final riding surface, provide wall closure as shown in DETAIL "A".
14. This dimension may be increased with approval of the Engineer to allow the precast boxes to be tunneled or jacked in accordance with Item 476, "Jacking, Boring, or Tunneling Pipe or Box". No payment will be made for any additional material in the gap between adjacent boxes.

GENERAL NOTES:

Designed according to AASHTO LRFD Specifications.

All closure concrete shall be Class "C" with a minimum compressive strength of 3600 psi and shall be placed according to the Item, "Concrete Substructures".

Any additional concrete required for the closures shall be considered as subsidiary to the Concrete Box Culvert.

Refer to the Single Box Culverts Precast standard for details not shown.

The bottom edge of the top slab closure shall be chamfered 3 inches at the entrance.

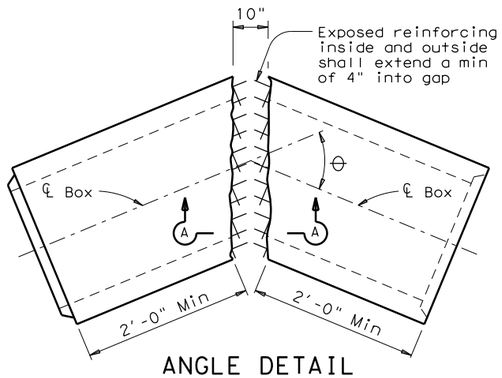

ANGLE DETAIL

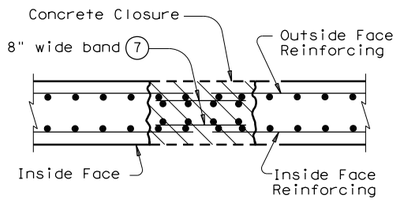

SECTION A-A

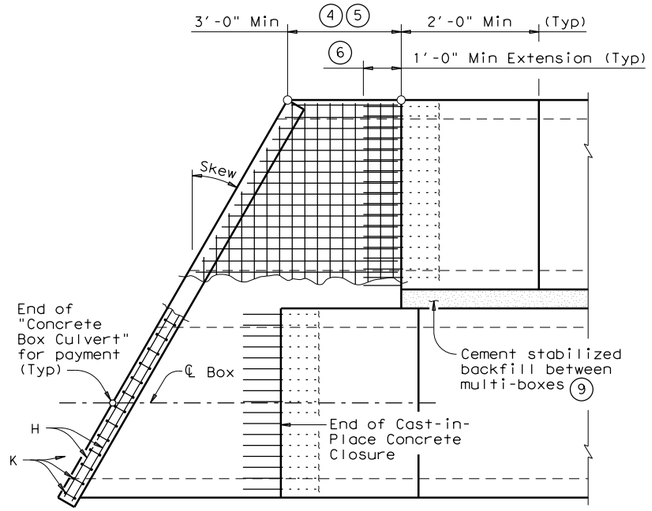

PLAN OF SKEWED ENDS

(Showing multi-box placement)

HL93 LOADING

Texas Department of Transportation

Bridge Division Standard

BOX CULVERTS PRECAST MISCELLANEOUS DETAILS

SCP-MD

FILE: scpmdsts.dgn	DN: GAF	CK: LMW	DW: BWH/TxDOT	CK: GAF
©TxDOT February 2010	CONT	SECT	JOB	HIGHWAY
REVISIONS				KLEIN RD
	DIST	COUNTY		SHEET NO.
	SAT	GUADALUPE		227

DISCLAIMER:
The use of this standard is governed by the "Texas Engineering Practice Act". No warranty of any kind is made by TxDOT for any purpose whatsoever. TxDOT assumes no responsibility for the conversion of this standard to other formats or for incorrect results or damages resulting from its use.

DATE: 1/9/2020 3:48:24 PM
FILE: H:\Projects\510130\03\Design\Civil\Standards\Drainage\scp05sts.dgn

BOX DATA

SECTION DIMENSIONS					Fill Height	M (Min)	REINFORCING (in²/ft) ②								① Lift Weight (Tons)
S (ft)	H (ft)	T_T (in)	T_B (in)	T_S (in)	(ft)	(in)	A_{S1}	A_{S2}	A_{S3}	A_{S4}	A_{S5}	A_{S6}	A_{S7}	A_{S8}	
5	3	8	7	6	<2	-	0.19	0.31	0.21	0.14	0.19	0.19	0.19	0.17	6.6
5	3	6	6	6	2<3	45	0.18	0.24	0.19	0.14	-	-	-	-	5.7
5	3	6	6	6	3-5	36	0.14	0.17	0.16	0.14	-	-	-	-	5.7
5	3	6	6	6	10	36	0.14	0.16	0.17	0.14	-	-	-	-	5.7
5	3	6	6	6	15	35	0.16	0.21	0.22	0.14	-	-	-	-	5.7
5	3	6	6	6	20	35	0.21	0.27	0.28	0.14	-	-	-	-	5.7
5	3	6	6	6	25	35	0.26	0.34	0.34	0.14	-	-	-	-	5.7
5	3	6	6	6	30	35	0.31	0.41	0.41	0.14	-	-	-	-	5.7
5	4	8	7	6	<2	-	0.19	0.33	0.24	0.14	0.19	0.19	0.19	0.17	7.2
5	4	6	6	6	2<3	45	0.16	0.27	0.22	0.14	-	-	-	-	6.3
5	4	6	6	6	3-5	45	0.14	0.19	0.18	0.14	-	-	-	-	6.3
5	4	6	6	6	10	36	0.14	0.18	0.18	0.14	-	-	-	-	6.3
5	4	6	6	6	15	35	0.14	0.23	0.24	0.14	-	-	-	-	6.3
5	4	6	6	6	20	35	0.17	0.30	0.31	0.14	-	-	-	-	6.3
5	4	6	6	6	25	35	0.21	0.37	0.38	0.14	-	-	-	-	6.3
5	4	6	6	6	30	35	0.25	0.44	0.45	0.14	-	-	-	-	6.3
5	5	8	7	6	<2	-	0.19	0.35	0.26	0.14	0.19	0.19	0.19	0.17	7.8
5	5	6	6	6	2<3	45	0.14	0.29	0.24	0.14	-	-	-	-	6.9
5	5	6	6	6	3-5	45	0.14	0.21	0.20	0.14	-	-	-	-	6.9
5	5	6	6	6	10	45	0.14	0.19	0.20	0.14	-	-	-	-	6.9
5	5	6	6	6	15	36	0.14	0.24	0.25	0.14	-	-	-	-	6.9
5	5	6	6	6	20	35	0.15	0.31	0.32	0.14	-	-	-	-	6.9
5	5	6	6	6	25	35	0.18	0.38	0.39	0.14	-	-	-	-	6.9
5	5	6	6	6	30	35	0.21	0.46	0.47	0.14	-	-	-	-	6.9
5	2	8	7	6	<2	-	0.20	0.31	0.20	0.14	0.22	0.19	0.19	0.17	6.0
5	2	6	6	6	30	44	0.39	0.33	0.34	0.14	-	-	-	-	5.1

⑤

① For Box Length = 8'-0"

② A_{S1} thru A_{S4}, A_{S7} and A_{S8} are minimum required areas of reinforcement per linear foot of box length. A_{S6} and A_{S5} are minimum required areas of reinforcement per linear foot of box width.

⑤ These designs were created by TxDOT and are not shown in the ASTM Specifications.

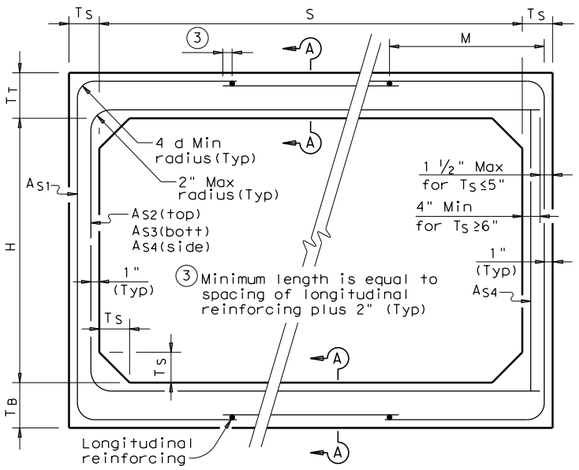

CORNER OPTION "A" CORNER OPTION "B"

FILL HEIGHT 2 FT AND GREATER

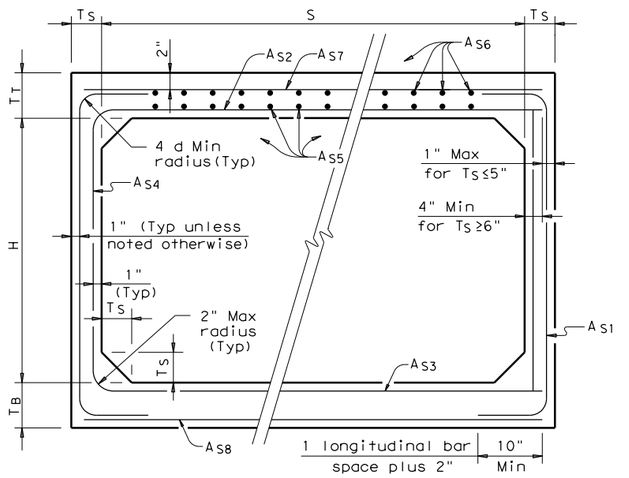

CORNER OPTION "A" CORNER OPTION "B"

FILL HEIGHT LESS THAN 2 FT

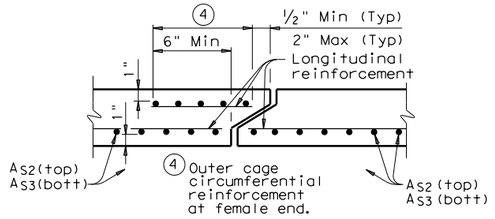

SECTION A-A

(TOP AND BOTTOM SLAB JOINT REINFORCEMENT)

GENERAL NOTES:

Designs shown conform to ASTM C1577.

Refer to ASTM C1577 for information or details not shown.

All concrete shall be Class "H" Concrete with a minimum compressive strength of 5,000 psi.

See SCP-MD standard sheet for miscellaneous details and notes not shown.

In lieu of furnishing the designs shown on this sheet, the contractor may furnish an alternate design that is equal to or exceeds the box design for the design fill height in the table. Shop plans for alternate designs shall be submitted in accordance with Item "Precast Concrete Structural Members (Fabrication)".

HL93 LOADING

Texas Department of Transportation

Bridge Division Standard

SINGLE BOX CULVERTS PRECAST

5'-0" SPAN

SCP-5

FILE: scp05sts.dgn	DN: GAF	CK: LMW	DW: BWH/TxDOT	CK: GAF
©TxDOT February 2010 REVISIONS	CONT	SECT	JOB	HIGHWAY
				KLEIN RD
	DIST	COUNTY		SHEET NO.
	SAT	GUADALUPE		228

Culvert Station and/or Creek name followed by applicable end (Lt, Rt or Both)	Description of Box Culvert No. Spans ~ Span X Height	Max Fill Height (Ft)	Applicable Box Culvert Standard (4)	Applicable Wingwall or End Treatment Standard	Skew Angle (0°, 15°, 30° or 45°)	Side Slope or Channel Slope Ratio (SL:1)	T Culvert Top Slab Thickness (In)	U Culvert Wall Thickness (In)	C Estimated Curb Height (Ft)	Hw (1) Height of Wingwall (Ft)	A Curb to End of Wingwall (Ft)	B Offset of End of Wingwall (Ft)	Lw Length of Longest Wingwall (Ft)	Ltw Culvert Toewall Length (Ft)	Atw Anchor Toewall Length (Ft)	Riprap Apron (C.Y.)	Class "C" Conc (Curb) (2) (C.Y.)	Class "C" Conc (Wingwall) (3) (C.Y.)	Total Wingwall Area (S.F.)
STA 134+45, OUTFALL A, RT	1 ~ 5′ X 4′	5	SCP-5	PW-1	45°	4:1	6"	6"	0.500′	5.000′	N/A	N/A	28.284′	6.000	N/A	0.0	0.1	7.5	283
STA 137+46, OUTFALL B, RT	1 ~ 5′ X 3′	4	SCP-5	PW-1	0°	3:1	6"	6"	0.500′	4.000′	N/A	N/A	12.000′	6.000	N/A	0.0	0.1	6.8	96

NOTES:

Skew Angle = 0° for SW-0, FW-0, SETB-CD, SETB-SW-0, and SETB-FW-0 standards.
30° Maximum for Safety End Treatment

SL:1 = Horizontal:1 Vertical
Side Slope at culvert for Flared or Straight Wingwalls. Channel Slope for Parallel Wingwalls.
Slope shall be 3:1 or flatter for Safety End Treatments.

T = Box Culvert Top Slab Thickness. Dimension can be found on the applicable Box Culvert Standard.

U = Box Culvert Wall Thickness. Dimension can be found on the applicable Box Culvert Standard.

C = Curb Height.

See applicable wing or end treatment standards for calculations of Hw, A, B, Lw, Ltw, Atw, and Total Wingwall Area.
Hw = Height of Wingwall.
A = Distance from Face of Curb to End of Wingwall (Not applicable to Parallel or Straight Wingwalls).
B = Offset of End of Wingwall (Not applicable to Parallel or Straight Wingwalls).
Lw = Length of Longest Wingwall.
Ltw = Length of Culvert Toewall (Not applicable when using Riprap Apron).
Atw = Length of Anchor Toewall (Applicable to Safety End Treatment only).
Total Wingwall Area = Wingwall area in S.F. for two wingwalls (one structure end) if Lt or Rt.
Area for four wingwalls (two structure ends) if Both.

(1) The wall heights shown will be rounded to the nearest Foot for bidding purposes.

(2) Concrete volume shown is for box culvert curb only. For curbs using the RAC standard, quantities shown must be increased by a factor of 2. If Class "S" concrete is required for the top slab of the culvert, the curb concrete shall also be Class "S". Curb concrete is considered part of the Box Culvert for payment.

(3) Concrete volume shown is total of wing, footing, culvert toewall (if any), anchor toewall (if any) and wingwall toewall. Riprap apron, culvert and curb quantities are not included.

(4) Regardless of the type of culvert shown on this sheet, the Contractor shall have the option of furnishing cast-in-place or precast culverts unless otherwise shown elsewhere on the plans. If the Contractor elects to provide culverts of a different type than those shown on this sheet, it shall be the Contractor's responsibility to make the necessary adjustments to the dimensions and quantities shown.

SPECIAL NOTE:

This sheet is a supplement to the Box Culvert standards. It is to be filled out by the culvert specifier and provides dimensions for the construction of the Box Culvert Wingwalls and Safety End Treatments.

An Excel 97 spreadsheet to assist in completing this table can be downloaded from the Bridge Standards (English) web page on the TxDOT web site. The completed sheet shall be signed, sealed, and dated by a licensed Professional Engineer.

Texas Department of Transportation

Bridge Division Standard

BOX CULVERT SUPPLEMENT
WINGS AND END TREATMENTS

BCS

FILE: bcsstdel.dgn	DN: TxDOT	CK: TxDOT	DW: TxDOT	CK: GAF
©TxDOT February 2010	CONT	SECT	JOB	HIGHWAY
REVISIONS				KLEIN RD
	DIST	COUNTY		SHEET NO.
	SAT	GUADALUPE		229

DISCLAIMER:
The use of this standard is governed by the "Texas Engineering Practice Act". No warranty of any kind is made by TxDOT for any purpose whatsoever. TxDOT assumes no responsibility for the conversion of this standard to other formats or for incorrect results or damages resulting from its use.

DATE: 1/9/2020 3:48:26 PM
FILE: H:\Projects\510\30\03\Design\Civil\Standards\Drainage\bcsstdel.dgn

DISCLAIMER:
The use of this standard is governed by the "Texas Engineering Practice Act". No warranty of any kind is made by TxDOT for any purpose whatsoever. TxDOT assumes no responsibility for the conversion of this standard to other formats or for incorrect results or damages resulting from its use.

DATE: 1/9/2020 3:48:28 PM
FILE: H:\Projects\510\30\03\Design\Civil\Standards\Drainage\pwstde01.dgn

TABLE OF DIMENSIONS & REINFORCING STEEL
(Wings for One Structure End)

Dimensions					Variable Reinforcing				Estimated ④ Quantities per ft of wing (2~Wings)		Estimated Quantities per ft of Toewall (1~Toewall)	
					Bars J1		Bars J2					
Maximum Wingwall Height Hw	W	X	Y	Z	Size	Spa	Size	Spa	Reinf (Lb/Ft)	Conc (CY/Ft)	Reinf (Lb/Ft)	Conc (CY/Ft)
2'-6"	2'-10"	10"	1'- 0"	7"	#4	1'-0"	#4	1'-0"	48.64	0.406	6.85	0.071
2'-9"	2'-10"	10"	1'- 0"	7"	#4	1'-0"	#4	1'-0"	49.31	0.424	6.85	0.071
3'-0"	2'-10"	10"	1'- 0"	7"	#4	1'-0"	#4	1'-0"	49.98	0.444	6.85	0.071
3'-3"	2'-10"	10"	1'- 0"	7"	#4	1'-0"	#4	1'-0"	53.32	0.462	6.85	0.071
3'-6"	2'-10"	10"	1'- 0"	7"	#4	1'-0"	#4	1'-0"	53.98	0.480	6.85	0.071
4'-0"	3'- 2"	1'- 2"	1'- 0"	7"	#4	1'-0"	#4	1'-0"	55.77	0.532	6.85	0.071
4'-6"	3'- 2"	1'- 2"	1'- 0"	7"	#4	1'-0"	#4	1'-0"	59.77	0.568	6.85	0.071
5'-0"	3'- 9"	1'- 7"	1'- 2"	7"	#4	1'-0"	#4	1'-0"	63.45	0.632	6.96	0.075
5'-6"	3'- 9"	1'- 7"	1'- 2"	7"	#4	1'-0"	#4	1'-0"	67.46	0.668	6.96	0.075
6'-0"	4'- 4"	2'- 0"	1'- 4"	7"	#5	1'-0"	#5	1'-0"	80.67	0.730	7.07	0.078
6'-6"	4'- 4"	2'- 0"	1'- 4"	7"	#5	1'-0"	#5	1'-0"	85.05	0.768	7.07	0.078
7'-0"	5'- 0"	2'- 3"	1'- 9"	8"	#5	1'-0"	#5	1'-0"	92.15	0.864	8.07	0.093
7'-6"	5'- 0"	2'- 3"	1'- 9"	8"	#5	1'-0"	#5	1'-0"	96.54	0.902	8.07	0.093
8'-0"	5'- 6"	2'- 8"	1'-10"	8"	#5	6"	#5	6"	139.04	0.962	8.13	0.095
8'-6"	5'- 6"	2'- 8"	1'-10"	8"	#5	6"	#5	6"	144.47	1.000	8.13	0.095
9'-6"	6'- 0"	2'-10"	2'- 2"	9"	#5	6"	#5	6"	156.93	1.136	8.41	0.110
10'-6"	6'- 5"	3'- 0"	2'- 5"	9"	#6	6"	#5	6"	196.27	1.234	8.57	0.117
11'-6"	7'- 2"	3'- 6"	2'- 8"	11"	#6	6"	#6	6"	230.13	1.438	9.52	0.140
12'-6"	7'- 8"	3'- 9"	2'-11"	1'- 0"	#7	6"	#6	6"	283.41	1.592	9.74	0.157
13'-6"	8'- 2"	4'- 0"	3'- 2"	1'- 2"	#8	6"	#6	6"	348.72	1.804	10.02	0.186
14'-6"	8'-10"	4'- 5"	3'- 5"	1'- 4"	#9	6"	#6	6"	432.94	2.046	10.30	0.218
15'-6"	9'- 6"	4'-10"	3'- 8"	1'- 6"	#9	6"	#7	6"	489.52	2.302	11.24	0.253
16'-0"	9'-11"	5'- 0"	3'-11"	1'- 7"	#9	6"	#7	6"	505.72	2.448	11.47	0.279

TABLE OF WINGWALL REINFORCING (2~Wings)

Bar	Size	No.	Spa
D1	#6	~	1'-0"
D2	#6	~	1'-0"
E1	#4	~	1'-0"
F	#4	~	1'-0"
G	#6	~	8"
M1	#4	4	~
P	#4	~	1'-0"
V	#4	~	1'-0"

TABLE OF TOEWALL REINFORCING

Bar	Size	No	Spa
J3	#4	~	1'-0"
M2	#4	2	~
E2	#4	~	1'-0"

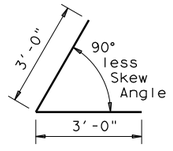

BARS D1

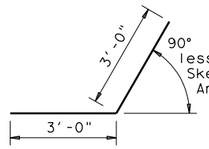

BARS D2

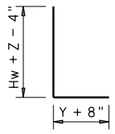

BARS J1

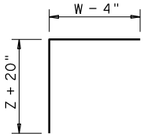

BARS J2

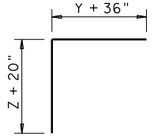

BARS J3

BARS V

WING DIMENSION CALCULATIONS:

Formulas: (All values are in Feet)

Hw = H + T + C
Lw = (Hw) (SL) ÷ Cosine θ for Ty PW-1
= (Hw - 1') (SL) ÷ Cosine θ for Ty PW-2 and Hw ≥ 4'
= (Hw - 0.5') (SL) ÷ Cosine θ for Ty PW-2 and Hw < 4'

For Cast-in-place culverts:
Ltw = [(N) (S) + (N + 1) (U)] ÷ Cosine θ

For Precast culverts:
Ltw = [(N) (2 U + S) + (N - 1) (0.5')] ÷ Cosine θ
Total Wingwall Area (Two Wings ~ SF)
= (2)(Hw)(Lw) for Ty PW-1
= (2)(Hw)(Lw) - 6 SF for Ty PW-2 and Hw ≥ 4'
= (2)(Hw)(Lw) - 1.5 SF for Ty PW-2 and Hw < 4'

Hw = Height of Wingwall
Lw = Length of Wingwall
Ltw = Culvert Toewall Length
N = Number of Culvert Spans
SL:1 = Channel Slope ratio. (Horizontal: 1 Vertical, Usual value is 2:1)
θ = Culvert Skew

See applicable box culvert standard for S, H, T and U values.

PARTIAL ELEVATION - PW-1

PARTIAL ELEVATION - PW-2

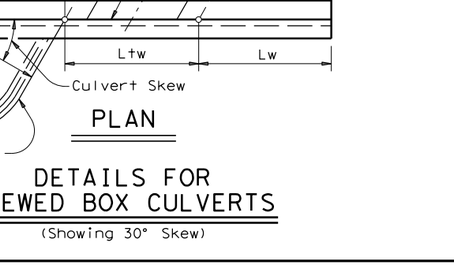

SECTION C-C

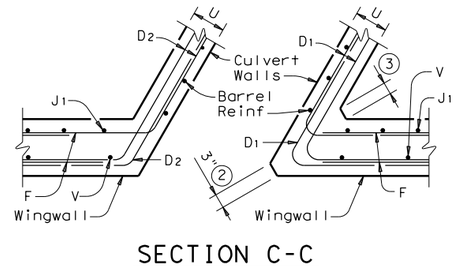

SECTION C-C

SECTION A-A
(Showing Wing Reinf)

SECTION B-B
(Showing Wing Reinf)

PLAN

DETAILS FOR
NON-SKEWED BOX CULVERTS

PLAN

DETAILS FOR
SKEWED BOX CULVERTS
(Showing 30° Skew)

① Skew Angle = 0°

② At discharge end, chamfer may be ¾".

③ For 15° Skew ~ 1"
For 30° Skew ~ 2"
For 45° Skew ~ 3"

④ Quantities shown are for two Type PW-1 wings. Adjust concrete volume for Type PW-2 wings. To determine estimated quantities for two wings, multiply the tabulated values by Lw. Quantities shown do not include weight of Bars D.

⑤ Provide weepholes for Hw = 5'-0" and greater. Fill around weepholes with coarse gravel.

⑥ Extend Bars E2 1'-6" minimum into the wingwall footing.

⑦ Lap Bars M1 1'-6" minimum with Bars M2.

⑧ Bars G equally spaced at 8" maximum, place as shown. Provide at least two pair Bars G per wing.

⑨ 0" min to 5'-0" max. Estimated curb heights are shown elsewhere in the plans. For structures with pedestrian rail, bicycle rail or curbs taller than 1'-0", refer to ECD standard. For structures with T6 bridge rail, refer to T6-CM standard. For structures with traffic rail, other than T6, refer to RAC standard.

⑩ For vehicle safety, the following requirements must be met:
- For structures without bridge rail, curbs cannot project more than 3" above finished grade.
- For structures with bridge rail, build curbs flush with finished grade.
Reduce curb heights, if necessary, to meet the above requirements. No changes will be made in quantities and no additional compensation will be allowed for this work.

⑪ 1'-0" typical. 2'-0" typical when RAC standard is referenced elsewhere in the plans.

⑫ 3'-0" for Hw < 4'.

⑬ 6" for Hw < 4'.

GENERAL NOTES:
Designed in accordance with AASHTO LRFD Bridge Design Specifications.
Provide Class "C" Concrete (f'c = 3,600 psi Min) and Grade 60 reinforcing steel.
Provide 1 ¼" Min clear cover to reinforcing steel.
Depth of toewalls for wingwalls and culverts may be reduced or eliminated when founded on solid rock, when directed by the Engineer.
See BCS sheet for wingwall type and additional dimensions and information.
The quantities for concrete and reinforcing steel resulting from the formulas given on this sheet are for the Contractor's information only.

DESIGNER NOTES:
Type PW-1 can be used for all applications and must be used if railing is to be mounted to the wingwall.
Type PW-2 can only be used for applications without a railing mounted to the wingwall.

Texas Department of Transportation

Bridge Division Standard

CONCRETE WINGWALLS
WITH PARALLEL WINGS FOR BOX CULVERTS
TYPES PW-1 AND PW-2

PW

FILE: pwstde01.dgn	DN: GAF	CK: CAT	DW: TxDOT	CK: GAF
©TxDOT February 2010	CONT	SECT	JOB	HIGHWAY
REVISIONS				KLEIN RD
11-10: Reinforcing Quantities. 01-12: PW-1 & PW-2.	DIST	COUNTY		SHEET NO.
	SAT	GUADALUPE		230

TABLE OF VARIABLE DIMENSIONS AND QUANTITIES FOR ONE HEADWALL (4)

SLOPE	DIA OF PIPE, D	Values for one Pipe			Values to be added for each addt'l Pipe		
		W	Reinf (Lbs)	Conc (CY) (1)	W	Reinf (Lbs)	Conc (CY) (1)
2:1	12"	9'- 0"	122	1.1	1'- 9"	15	0.2
	15"	10'- 3"	136	1.3	2'- 2"	16	0.2
	18"	11'- 6"	163	1.5	2'- 8"	19	0.3
	21"	12'- 9"	200	1.8	3'- 1"	31	0.4
	24"	14'- 0"	217	2.1	3'- 7"	34	0.4
	27"	15'- 3"	254	2.4	3'-11"	37	0.5
	30"	16'- 6"	272	2.7	4'- 4"	40	0.6
	33"	17'- 9"	314	3.1	4'- 8"	43	0.6
	36"	19'- 0"	371	3.9	5'- 1"	46	0.8
	42"	21'- 6"	442	4.9	5'-10"	52	1.0
	48"	25'- 0"	569	6.4	6'- 7"	59	1.3
	54"	27'- 6"	701	7.5	7'- 6"	82	1.6
	60"	30'- 0"	794	8.8	8'- 3"	90	1.8
	66"	32'- 6"	894	10.2	8'- 9"	96	2.0
	72"	35'- 0"	1055	11.7	9'- 4"	103	2.3
3:1	12"	13'- 0"	175	1.6	1'- 9"	14	0.2
	15"	14'- 9"	193	1.9	2'- 2"	17	0.2
	18"	16'- 6"	228	2.2	2'- 8"	19	0.3
	21"	18'- 3"	299	2.6	3'- 1"	31	0.4
	24"	20'- 0"	323	3.0	3'- 7"	33	0.4
	27"	21'- 9"	371	3.5	3'-11"	37	0.5
	30"	23'- 6"	415	4.0	4'- 4"	40	0.5
	33"	25'- 3"	469	4.6	4'- 8"	43	0.6
	36"	27'- 0"	556	5.7	5'- 1"	46	0.8
	42"	30'- 6"	675	7.1	5'-10"	52	1.0
	48"	35'- 6"	837	9.2	6'- 7"	59	1.3
	54"	39'- 0"	1015	11.0	7'- 6"	84	1.6
	60"	42'- 6"	1171	12.9	8'- 3"	91	1.8
	66"	46'- 0"	1298	14.9	8'- 9"	98	2.0
	72"	49'- 6"	1561	17.1	9'- 4"	103	2.3
4:1	12"	17'- 0"	229	2.0	1'- 9"	15	0.2
	15"	19'- 3"	266	2.4	2'- 2"	17	0.2
	18"	21'- 6"	308	2.9	2'- 8"	19	0.3
	21"	23'- 9"	382	3.5	3'- 1"	31	0.3
	24"	26'- 0"	430	3.9	3'- 7"	34	0.4
	27"	28'- 3"	486	4.7	3'-11"	37	0.5
	30"	30'- 6"	539	5.2	4'- 4"	40	0.6
	33"	32'- 9"	603	6.0	4'- 8"	42	0.6
	36"	35'- 0"	738	7.5	5'- 1"	47	0.8
	42"	39'- 6"	881	9.3	5'-10"	52	1.0
	48"	46'- 0"	1102	12.1	6'- 7"	61	1.3
	54"	50'- 6"	1364	14.4	7'- 6"	84	1.6
	60"	55'- 0"	1547	16.9	8'- 3"	91	1.8
	66"	59'- 6"	1741	19.5	8'- 9"	98	2.0
	72"	64'- 0"	2069	22.4	9'- 4"	102	2.3
6:1	12"	25'- 0"	336	3.0	1'- 9"	14	0.2
	15"	28'- 3"	384	3.6	2'- 2"	17	0.2
	18"	31'- 6"	452	4.2	2'- 8"	19	0.3
	21"	34'- 9"	581	5.1	3'- 1"	31	0.4
	24"	38'- 0"	644	5.8	3'- 7"	34	0.4
	27"	41'- 3"	737	6.9	3'-11"	37	0.5
	30"	44'- 6"	807	7.7	4'- 4"	39	0.6
	33"	47'- 9"	912	8.9	4'- 8"	44	0.6
	36"	51'- 0"	1108	11.0	5'- 1"	48	0.8
	42"	57'- 6"	1318	13.7	5'-10"	54	1.0
	48"	67'- 0"	1674	17.9	6'- 7"	59	1.3
	54"	73'- 6"	2064	21.3	7'- 6"	83	1.6
	60"	80'- 0"	2343	24.9	8'- 3"	89	1.8
	66"	86'- 6"	2635	28.9	8'- 9"	96	2.0
	72"	93'- 0"	3123	33.1	9'- 4"	101	2.3

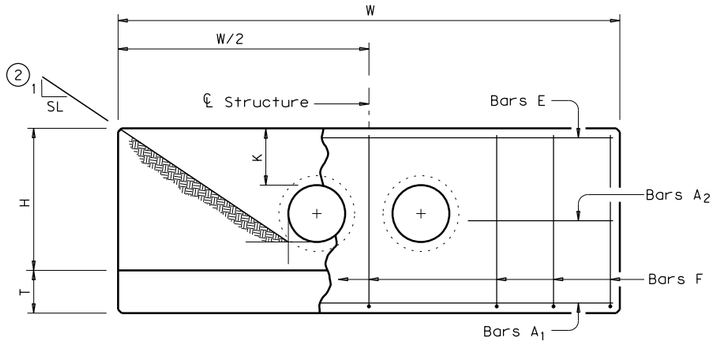

ELEVATION

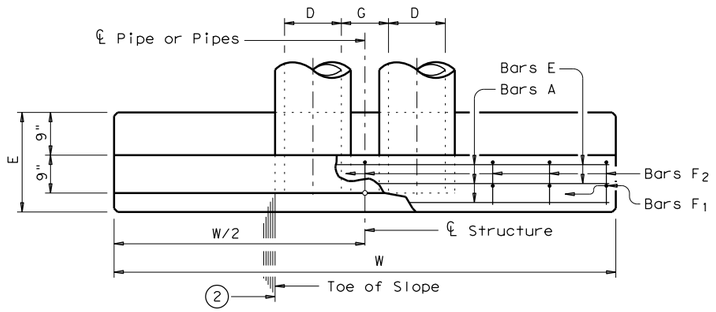

PLAN OF NON-SKEWED PIPES

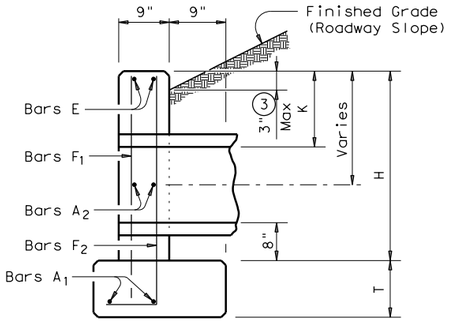

℄ SECTION

TABLE OF CONSTANT DIMENSIONS

DIA OF PIPE, D	G	K	H	T	E
12"	9"	1'- 0"	2'- 8"	9"	1'- 9"
15"	11"	1'- 0"	2'-11"	9"	1'- 9"
18"	1'- 2"	1'- 0"	3'- 2"	9"	1'- 9"
21"	1'- 4"	1'- 0"	3'- 5"	9"	2'- 0"
24"	1'- 7"	1'- 0"	3'- 8"	9"	2'- 0"
27"	1'- 8"	1'- 0"	3'-11"	9"	2'- 3"
30"	1'-10"	1'- 0"	4'- 2"	9"	2'- 3"
33"	1'-11"	1'- 0"	4'- 5"	9"	2'- 6"
36"	2'- 1"	1'- 0"	4'- 8"	1'- 0"	2'- 6"
42"	2'- 4"	1'- 0"	5'- 2"	1'- 0"	2'- 9"
48"	2'- 7"	1'- 3"	5'-11"	1'- 0"	3'- 0"
54"	3'- 0"	1'- 3"	6'- 5"	1'- 0"	3'- 3"
60"	3'- 3"	1'- 3"	6'-11"	1'- 0"	3'- 6"
66"	3'- 3"	1'- 3"	7'- 5"	1'- 0"	3'- 9"
72"	3'- 4"	1'- 3"	7'-11"	1'- 0"	4'- 0"

TABLE OF REINFORCING STEEL (4)

Bar	Size	Spa	No.
A1	# 5	~	2
A2	# 5	1'-6"	~
E	# 5	~	2
F	# 5	1'-0"	~

BARS F_2

GENERAL NOTES:
Designed according to AASHTO LRFD Specifications.
Reinforcing steel shall be placed with the center of the outside layer of bars 2" from the surface of the concrete.
All reinforcing steel shall be Grade 60.
All concrete shall be Class "C" and shall have a minimum compressive strength of 3600 psi.
No bridge rails of any type may be mounted directly to these culvert headwalls.

(1) Quantities shown are for concrete pipe and will increase slightly for metal pipe installations.

(2) Indicated slope is perpendicular to centerline Pipe or Pipes.

(3) For vehicle safety, curbs shall project no more than 3" above finished grade. Curb heights shall be reduced, if necessary, to meet these requirements. No changes will be made in quantities and no additional compensation will be allowed for this work.

(4) Quantities shown are for one structure end only (one headwall).

Texas Department of Transportation | Bridge Division Standard

CONCRETE HEADWALLS WITH PARALLEL WINGS FOR NON-SKEWED PIPE CULVERTS

CH-PW-0

FILE: chpw0ste.dgn	DN: TxDOT	CK: TxDOT	DW: TxDOT	CK: GAF
©TxDOT February 2010 REVISIONS	CONT	SECT	JOB	HIGHWAY
	DIST	COUNTY		SHEET NO.
	SAT	GUADALUPE		231

DISCLAIMER:
The use of this standard is governed by the "Texas Engineering Practice Act". No warranty of any kind is made by TxDOT for any purpose whatsoever. TxDOT assumes no responsibility for the conversion of this standard to other formats or for incorrect results or damages resulting from its use.

DATE: 1/9/2020 3:48:30 PM
FILE: H:\Projects\510330\03\Design\Civil\Standards\Drainage\chpw0ste.dgn

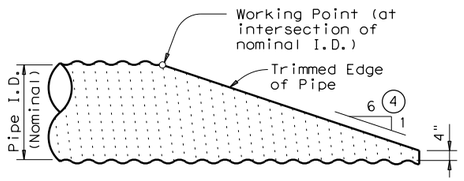

NOTE: All Cross Pipes, calculations, and dimensions are based on the pipe culverts mitered as shown in this detail. Alternate styles of mitered ends will require that appropriate adjustments be made to the values presented on this standard.

SIDE ELEVATION OF TYPICAL PIPE CULVERT MITER

(Showing Corrugated Metal Pipe Culvert.)
(Details at Concrete Pipe Culvert are similar.)

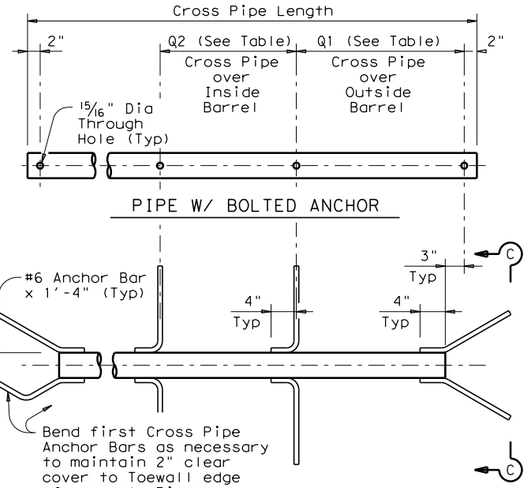

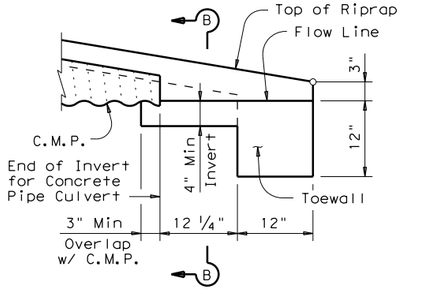

DETAIL "A"

(Showing Invert with Corrugated Metal Pipe Culvert. Concrete Pipe Culvert details are similar. Cross Pipes not shown for clarity.)

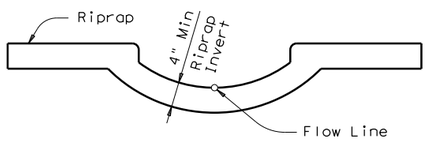

SECTION B-B

(Cross Pipes not shown for clarity.)

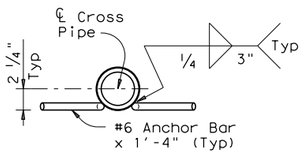

SECTION C-C

CROSS PIPE DETAILS

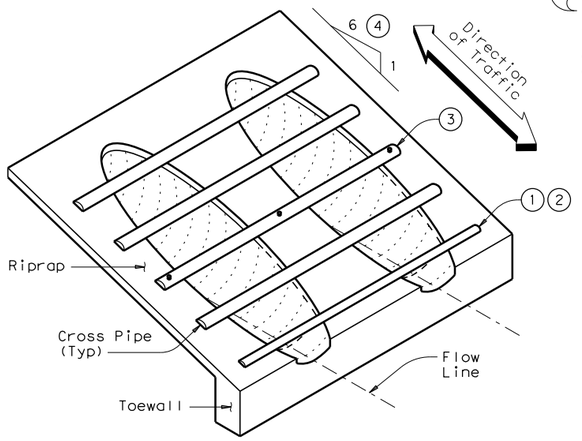

ISOMETRIC VIEW OF TYPICAL INSTALLATION

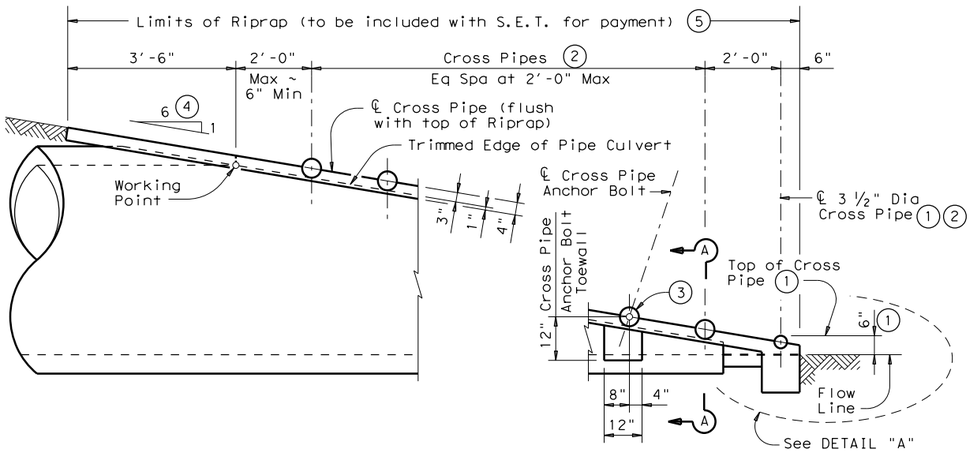

SIDE ELEVATION OF CAST-IN-PLACE CONCRETE

(Showing Concrete Pipe Culvert.)
(Details at Corrugated Metal Pipe Culvert are similar.)

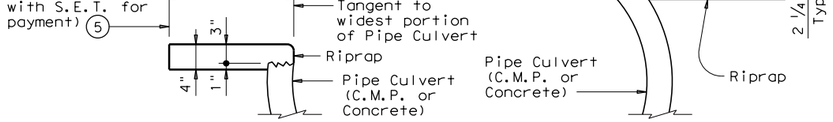

SHOWING TYPICAL PIPE CULVERT & RIPRAP

SHOWING CROSS PIPE WITH ANCHOR BAR

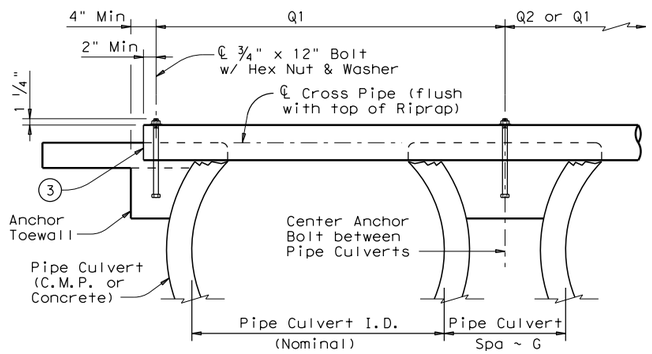

SHOWING CROSS PIPE WITH BOLTED ANCHOR

SECTION A-A

CROSS PIPE LENGTHS, REQUIRED PIPE SIZES, & RIPRAP QUANTITIES 2

Nominal Culvert I.D.	Conc Riprap (CY) 6	Pipe Culvert Spa ~ G	Single Barrel ~ Q1	Multi-Barrel ~ Q1	Q2	Conditions for use of Cross Pipes	Cross Pipe Size
12"	0.6	9"	N/A	2'- 1"	1'- 9"	3 or more Pipe Culverts	3" Std (3.500" O.D.)
15"	0.7	11"	N/A	2'- 5"	2'- 2"		
18"	0.8	1'- 2"	N/A	2'-10"	2'- 8"		
21"	0.9	1'- 4"	N/A	3'- 2"	3'- 1"		
24"	0.9	1'- 7"	N/A	3'- 6"	3'- 7"		
27"	1.0	1'- 8"	N/A	3'-10"	3'-11"	3 or more Pipe Culverts	3 1/2" Std (4.000" O.D.)
30"	1.1	1'-10"	N/A	4'- 2"	4'- 4"	2 or more Pipe Culverts	
33"	1.2	1'-11"	4'- 2"	4'- 5"	4'- 8"	All Pipe Culverts	
36"	1.3	2'- 1"	4'- 5"	4'- 9"	5'- 1"	All Pipe Culverts	4" Std (4.500" O.D.)
42"	1.5	2'- 4"	4'-11"	5'- 5"	5'-10"		
48"	1.7	2'- 7"	5'- 5"	6'- 0"	6'- 7"	All Pipe Culverts	5" Std (5.563" O.D.)
54"	2.0	3'- 0"	5'-11"	6'- 9"	7'- 6"		
60"	2.2	3'- 3"	6'- 5"	7'- 4"	8'- 3"		
66"	2.4	3'- 3"	6'-11"	7'-10"	8'- 9"		
72"	2.7	3'- 4"	7'- 5"	8'- 5"	9'- 4"		

1. The proper installation of the first Cross Pipe is critical for vehicle safety. The top of the first Cross Pipe must be placed at no more than 6" above the flow line.
2. Size of Cross Pipes, except the first bottom pipe, shall be as shown in the PIPE SIZE table. The first bottom pipe shall be 3 1/2" Standard Pipe (4" O.D.).
3. The third Cross Pipe from the bottom of the Culvert shall always be installed using a bolted connection. Care shall be taken to ensure that Riprap concrete does not flow into the Cross Pipe so as to permit disassembly of the bolted connection to allow cleanout access. At the Contractor's option, all other Cross Pipes may also be installed using the bolted connection details.
4. Match Cross Slope as shown elsewhere in the plans. Cross Slope of 6:1 or flatter is required for vehicle safety.
5. Riprap placed beyond the limits shown will be paid as Concrete Riprap in accordance with Item 432, "Riprap".
6. Quantities shown are for one end of one reinforced Concrete Pipe Culvert. For multiple pipe culverts or for Corrugated Metal Pipe Culverts, quantities will need to be adjusted. Riprap quantities are for Contractor's information only.

GENERAL NOTES:

Cross Pipes are designed for a traversing load of 10,000 pounds at yield as recommended by Research Report 280-2F, "Safety Treatment of Roadside Parallel-Drainage Structures", Texas Transportation Institute, March 1981.

Safety End Treatments shown herein are intended for use in those installations where out of control vehicles are likely to traverse the openings approximately perpendicular to the Cross Pipes.

Riprap and all necessary inverts shall be Concrete Riprap conforming to the requirements of Item 432, "Riprap".

Synthetic fibers listed on the "Fibers for Concrete" Material Producer List (MPL) may be used in lieu of steel reinforcing in riprap concrete unless noted otherwise.

Payment for riprap and toewall is included in the Price Bid for each Safety End Treatment.

Cross Pipes shall conform to the requirements of ASTM A53 (Type E or S, Grade B), ASTM A500 (Grade B), or API 5LX52.

Bolts and nuts shall conform to ASTM A307.

All steel components, except concrete reinforcing, shall be galvanized after fabrication. Galvanizing damaged during transport or construction shall be repaired in accordance with the specifications.

Texas Department of Transportation

Bridge Division Standard

SAFETY END TREATMENT

FOR 12" DIA TO 72" DIA
PIPE CULVERTS
TYPE II ~ PARALLEL DRAINAGE

SETP-PD

FILE: setppdse.dgn	DN: GAF	CK: CAT	DW: JRP	CK: GAF
©TxDOT February 2010	CONT	SECT	JOB	HIGHWAY
REVISIONS				KLEIN RD
11-10: Add note for synthetic fibers.	DIST	COUNTY		SHEET NO.
	SAT	GUADALUPE		232

DISCLAIMER:
The use of this standard is governed by the "Texas Engineering Practice Act". No warranty of any kind is made by TxDOT for any purpose whatsoever. TxDOT assumes no responsibility for the conversion of this standard to other formats or for incorrect results or damages resulting from its use.

DATE: 1/9/2020 3:48:32 PM
FILE: H:\Projects\510\30\03\Design\Civil\Standards\Drainage\setppdse.dgn

DISCLAIMER:
The use of this standard is governed by the "Texas Engineering Practice Act". No warranty of any kind is made by TxDOT for any purpose whatsoever. TxDOT assumes no responsibility for the conversion of this standard to other formats or for incorrect results or damages resulting from its use.

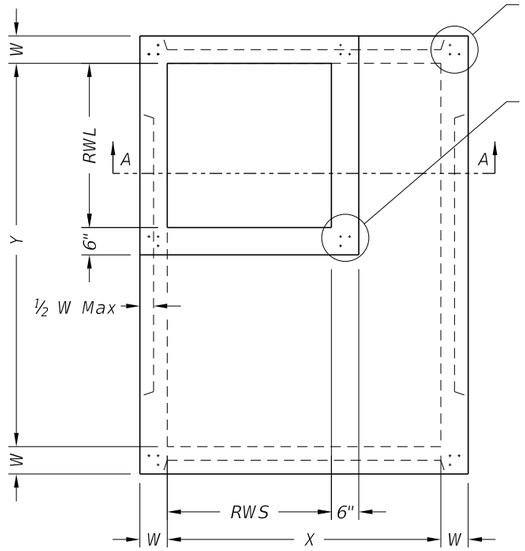

PLAN VIEW "A"

SQUARE REDUCED RISER OPTION

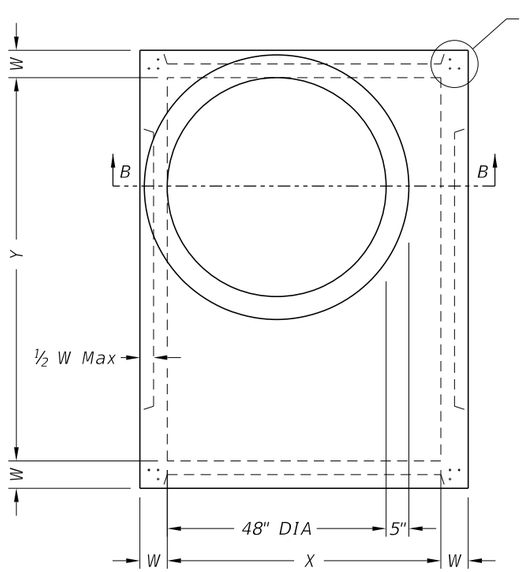

PLAN VIEW "B"

ROUND REDUCED RISER OPTION

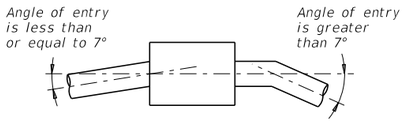

PIPE CONNECTION DETAIL

Connect pipes within 7° of normal to PB wall. If necessary, use pipe elbow or curved approach alignment to stay within this limit.

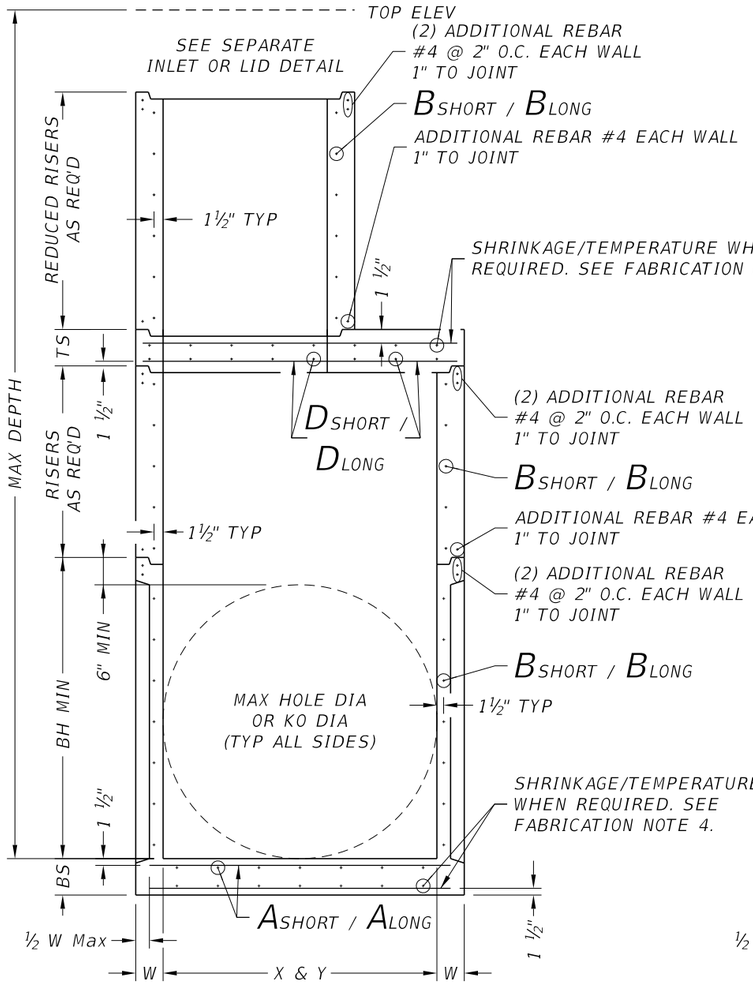

SECTION A-A

SQUARE REDUCED RISER OPTION

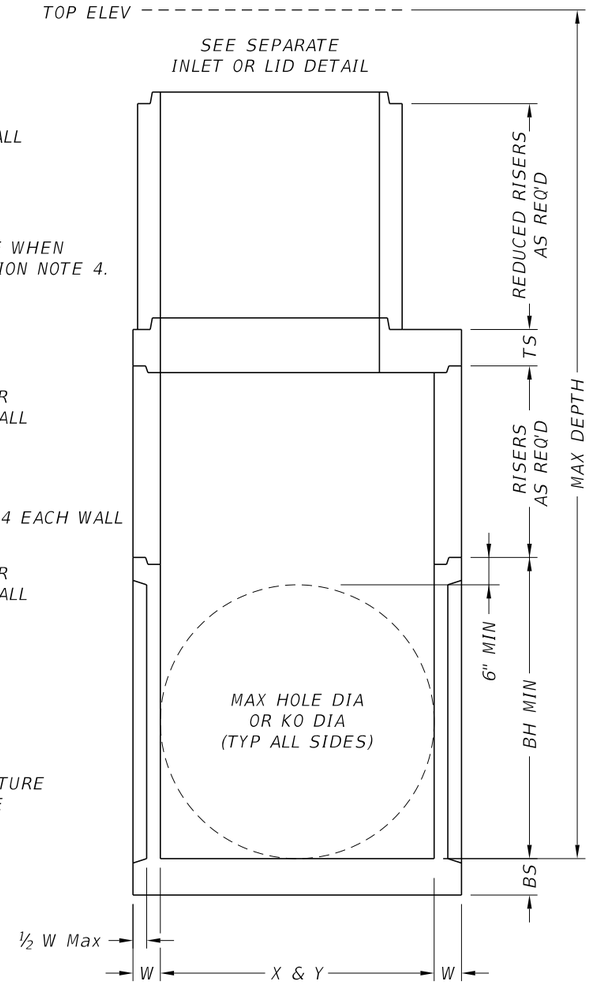

SECTION B-B

ROUND REDUCED RISER OPTION

FABRICATION NOTES:

1. Provide Class "H" concrete in accordance with Item 421 and having a minimum compressive strength of 5,000 psi.
2. Provide Grade 60 reinforcing steel or equivalent area of WWR.
3. Provide typical clear cover of 1 ½" to reinforcing steel at interior or exterior walls.
4. Walls or slabs with a thickness of 8" or greater require shrinkage and temperature reinforcing steel. Provide steel area = 0.11 in^2/ft each way.
5. No substitution is allowed for vertical and horizontal #4 bars in corners.
6. Manufacture base and risers to nearest 3" increment.
7. Design tongue and groove joints for full closure on both shoulders. Minimum spigot depth is ¾".
8. Provide lifting devices in conformance with Manufacturer's recommendations.
9. See sheet PDD for sizes, dimensions, and reinforcing steel not shown.

INSTALLATION NOTES:

1. Inverts (benching) to be provided by Contractor. Concrete or mortar used for invert is subsidiary to specified inlet or manhole.
2. Seal tongue and groove joints with preformed or bulk mastic in conformance with Manufacturer's recommendations. Tongue and groove joints may be grouted no more than 1" between each section, or ½ the joint depth, whichever is greater.
3. Do not grout rubber gasket joints without Manufacturer's recommendation.
4. For rigid pipe, cut hole in thin wall panel (KO) 4" Max, 2" Min larger than pipe OD.
5. For flexible pipe, consult boot/seal Manufacturer's specification for placement tolerance and hole size. Center pipe in hole and install boot/seal per Manufacturer's specification.

GENERAL NOTES:

1. Precast Base consists of base slab, base unit, risers (as required), reducing slab (as required), and reduced risers (as required). See sheet PDD for sizes.
2. Designed according to ASTM C913.
3. Payment for precast base is subsidiary to the specified inlet, per Item 465, "Junction Boxes, Manholes, and Inlets."

Cover dimensions are clear dimensions, unless noted otherwise.

HL93 LOADING

Texas Department of Transportation

Bridge Division Standard

PRECAST BASE

PB

FILE: prestd01.dgn	DN: TxDOT	CK: TxDOT	DW: TxDOT	CK: TxDOT
©TxDOT January 2015	CONT	SECT	JOB	HIGHWAY
REVISIONS				KLEIN RD
	DIST	COUNTY		SHEET NO.
	SAT	GUADALUPE		233

DATE: 1/9/2020 3:48:34 PM
FILE: H:\projects\5130\03\Design\Civil\Standards\Drainage\prestd01.dgn

DISCLAIMER:
The use of this standard is governed by the "Texas Engineering Practice Act". No warranty of any kind is made by TxDOT for any purpose whatsoever. TxDOT assumes no responsibility for the conversion to other formats or for incorrect results or damages resulting from its use.

DATE: 1/9/2020 3:48:36 PM
FILE: H:\projects\5100\30\03\Design\Civil\Standards\Drainage\pbgcstd1-18.dgn

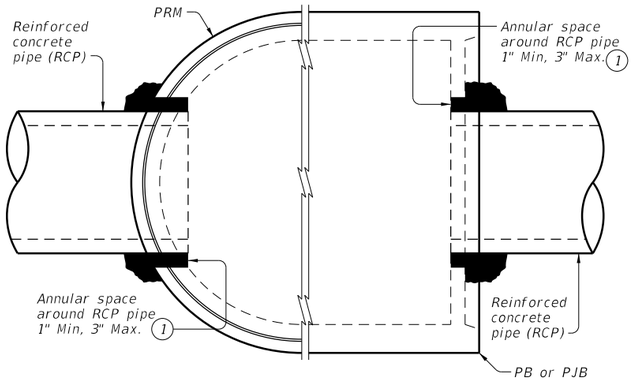

PRECAST ROUND MANHOLE (PRM) WITH THROUGH-HOLE

PRECAST BASE (PB) OR PRECAST JUNCTION BOX (PJB) WITH THIN-WALL KNOCK-OUT

TYPICAL HALF PLAN

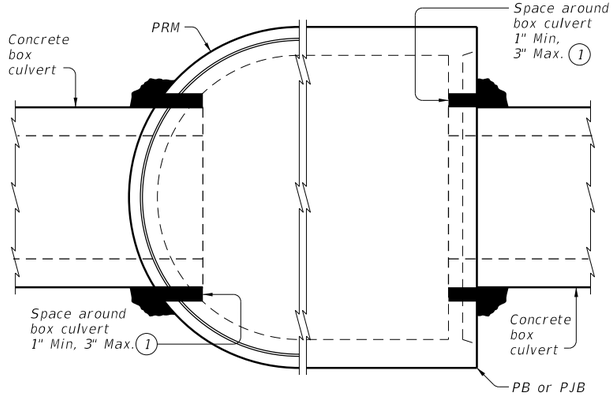

PRECAST ROUND MANHOLE (PRM) WITH THROUGH-HOLE

PRECAST BASE (PB) OR PRECAST JUNCTION BOX (PJB) WITH THIN-WALL KNOCK-OUT

TYPICAL HALF PLAN

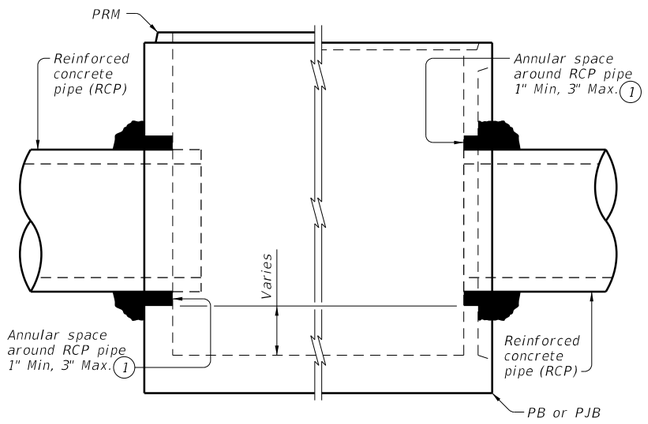

PRECAST ROUND MANHOLE (PRM) WITH THROUGH-HOLE

PRECAST BASE (PB) OR PRECAST JUNCTION BOX (PJB) WITH THIN-WALL KNOCK-OUT

TYPICAL HALF ELEVATION

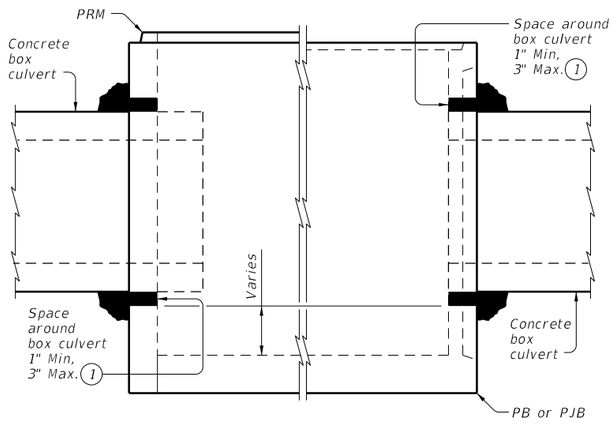

PRECAST ROUND MANHOLE (PRM) WITH THROUGH-HOLE

PRECAST BASE (PB) OR PRECAST JUNCTION BOX (PJB) WITH THIN-WALL KNOCK-OUT

TYPICAL HALF ELEVATION

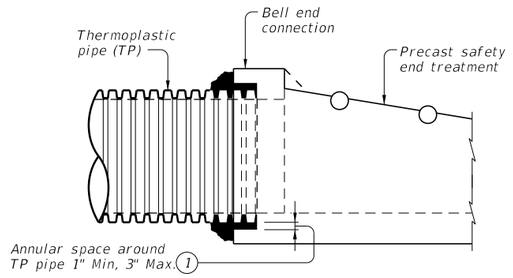

TYPICAL PARTIAL ELEVATION OF PRECAST SAFETY END TREATMENTS

Showing square PSET for parallel drainage, cross drainage shown similar.

(1) Completely fill the void between the precast structure and the connecting pipe or box with cementitious grouts and mortars in accordance with DMS-4675 "Cementitious Grouts and Mortars for Miscellaneous Application".

CONSTRUCTION NOTES:

Do not grout rubber gasket joints without Manufacturer's recommendations.

Do not use bricks, masonry blocks, native stone, or similar materials in conjunction with grouted connections when filling void spaces around pipes or box culverts.

MATERIAL NOTES:

Provide grouted connections in accordance with DMS-4675 "Cementitious Grouts and Mortars for Miscellaneous Application".

GENERAL NOTES:

See applicable standards for notes and details not shown:

- Precast Base (PB)
- Precast Junction Box (PJB)
- Precast Round Manhole (PRM)
- Precast Safety End Treatments C/D Square (PSET-SC)
- Precast Safety End Treatments P/D Square (PSET-SP)

Provide Concrete Box Culverts in accordance with Item 462 "Concrete Box Culverts and Drains".

Provide Reinforced Concrete Pipe (RCP) in accordance with Item 464 "Reinforced Concrete Pipe".

Provide Thermoplastic Pipe (TP) in accordance with Special Specification Thermoplastic Pipe.

Payment for grouted connections is considered subsidiary to other bid Items.

Texas Department of Transportation

Bridge Division Standard

PIPE AND BOX GROUTED CONNECTIONS FOR PRECAST STRUCTURES

PBGC

FILE: pbgcstd1-18.dgn	DN: TxDOT	CK: TAR	DW: JTR	CK: TAR
©TxDOT September 2018	CONT	SECT	JOB	HIGHWAY
REVISIONS				KLEIN RD
	DIST	COUNTY		SHEET NO.
	SAT	GUADALUPE		234

DISCLAIMER:
The use of this standard is governed by the "Texas Engineering Practice Act". No warranty of any kind is made by TxDOT for any purpose whatsoever. TxDOT assumes no responsibility for the conversion of this standard to other formats or for incorrect results or damages resulting from its use.

DATE: 1/9/2020 3:48:38 PM
FILE: H:\Projects\5107030\03\Design\Civil\Standards\Drainage\prestd09.dgn

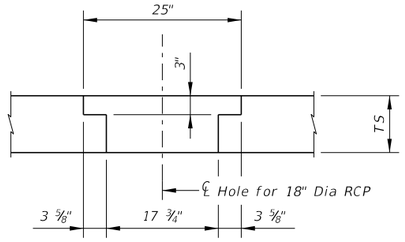

DETAIL "B"

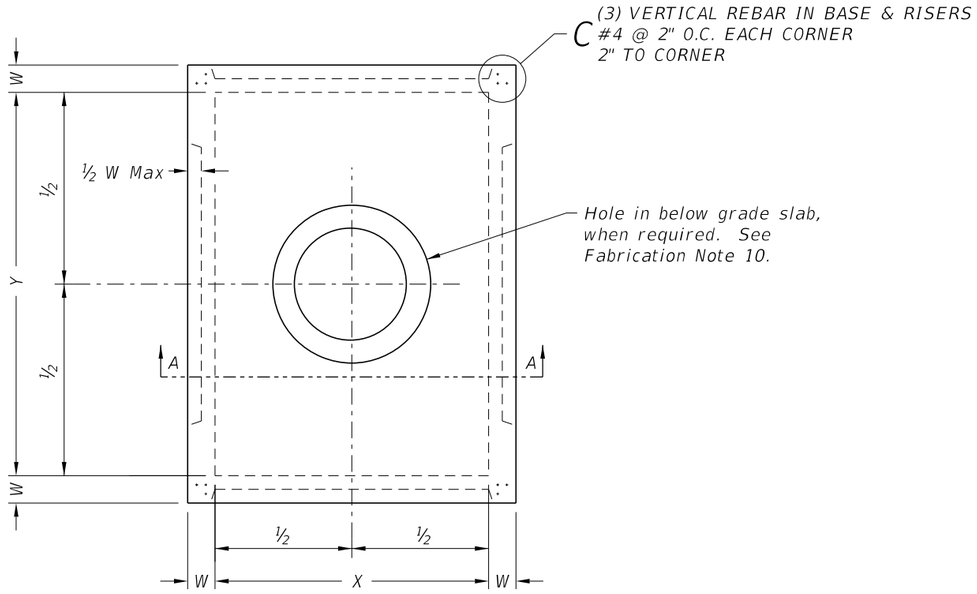

PLAN VIEW

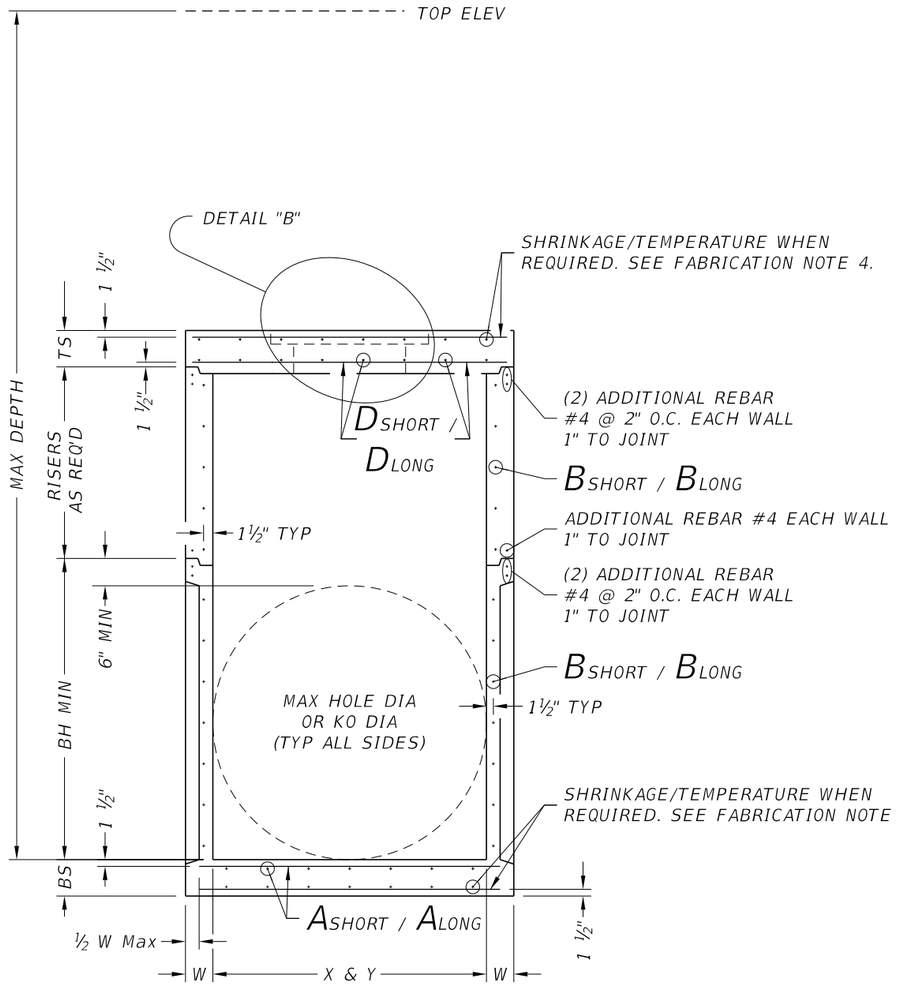

SECTION A-A

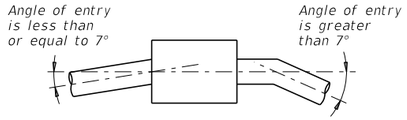

PIPE CONNECTION DETAIL

Connect pipes within 7° of normal to PJB wall. If necessary, use pipe elbow or curved approach alignment to stay within this limit.

FABRICATION NOTES:

1. Provide Class "H" concrete in accordance with Item 421 and having a minimum compressive strength of 5,000 psi.
2. Provide Grade 60 reinforcing steel or equivalent area of WWR.
3. Provide typical clear cover of 1 ½" to reinforcing steel at interior or exterior walls.
4. Walls or slabs with a thickness of 8" or greater require shrinkage and temperature reinforcing steel. Provide steel area = 0.11 in²/ft each way.
5. No substitution is allowed for vertical and horizontal #4 bars in corners.
6. Manufacture base and risers to nearest 3" increment.
7. Design tongue and groove joints for full closure on both shoulders. Minimum spigot depth is ¾".
8. Provide lifting devices in conformance with Manufacturer's recommendations.
9. See sheet PDD for sizes, dimensions, and reinforcing steel not shown.
10. Provide hole in below grade slab only when PJB is installed with inlet type POD.

INSTALLATION NOTES:

1. Inverts (benching) to be provided by Contractor. Concrete or mortar used for invert is subsidiary to junction box.
2. Seal tongue and groove joints with preformed or bulk mastic in conformance with Manufacturer's recommendations. Tongue and groove joints may be grouted no more than 1" between each section, or ½ the joint depth, whichever is greater.
3. Do not grout rubber gasket joints without Manufacturer's recommendation.
4. For rigid pipe, cut hole in thin wall panel (KO) 4" Max, 2" Min larger than pipe OD.
5. For flexible pipe, consult boot/seal Manufacturer's specification for placement tolerance and hole size. Center pipe in hole and install boot/seal per Manufacturer's specification.

GENERAL NOTES:

1. Precast Junction Box consists of base slab, base unit, risers (as required), and below grade slab. See sheet PDD for sizes.
2. Designed according to ASTM C913.
3. Payment for junction box is per Item 465 "Junction Boxes, Manholes, and Inlets" by type and size.

Cover dimensions are clear dimensions, unless noted otherwise.

HL93 LOADING

Texas Department of Transportation | Bridge Division Standard

PRECAST JUNCTION BOX

PJB

FILE: prestd09.dgn	DN: TxDOT	CK: TxDOT	DW: TxDOT	CK: TxDOT
©TxDOT January 2015	CONT	SECT	JOB	HIGHWAY
REVISIONS				KLEIN RD
	DIST	COUNTY		SHEET NO.
	SAT	GUADALUPE		235

	Size	MAX DEPTH = 15 ft. to top of BASE SLAB										MAX DEPTH = 25 ft. to top of BASE SLAB										Min Height (See Gen Note 3)	Max HOLE DIA (See Fab Note 2)	Max KO DIA (See Fab Note 2)
		Base Slab			Base Unit or Riser Walls			Below Grade Slab (w/PJB) Reducing Slab (w/PB)				Base Slab			Base Unit or Riser Walls			Below Grade Slab (w/PJB) Reducing Slab (w/PB)						
		Short Span Reinf Steel Area	Long Span Reinf Steel Area	Thickness	Short Span Reinf Steel Area	Long Span Reinf Steel Area	Thickness	Reduced Riser Size	Short Span Reinf Steel Area	Long Span Reinf Steel Area	Thickness	Short Span Reinf Steel Area	Long Span Reinf Steel Area	Thickness	Short Span Reinf Steel Area	Long Span Reinf Steel Area	Thickness	Reduced Riser Size	Short Span Reinf Steel Area	Long Span Reinf Steel Area	Thickness			
	X x Y	Ashort	Along	BS	Bshort	Blong	W	RWSxRWL or ID	Dshort	Dlong	TS	Ashort	Along	BS	Bshort	Blong	W	RWSxRWL or ID	Dshort	Dlong	TS	BH MIN	HOLE DIA	KO DIA
	ft.	in^2/ft	in^2/ft	in.	in^2/ft	in^2/ft	in.	ft. **	in^2/ft	in^2/ft	in.	in^2/ft	in^2/ft	in.	in^2/ft	in^2/ft	in.	ft. **	in^2/ft	in^2/ft	in.	ft.	in.	in.
Precast Junction Box (PJB)	3x3	0.23	0.23	6	0.19	0.19	6	N/A	0.37	0.37	9	0.29	0.29	6	0.24	0.24	6	N/A	0.37	0.37	9	3.5	36	36
	4x4	0.29	0.29	6	0.24	0.24	6	N/A	0.41	0.41	9	0.47	0.47	6	0.38	0.38	6	N/A	0.41	0.41	9	4.5	48	48
	3x5	0.29	0.18	6	0.19	0.35	6	N/A	0.48	0.48	9	0.39	0.18	6	0.23	0.59	6	N/A	0.48	0.48	9	3.5	36/60	36/60
	4x5	0.36	0.18	6	0.22	0.34	6	N/A	0.42	0.42	9	0.53	0.26	6	0.39	0.59	6	N/A	0.42	0.42	9	4.5	48/60	48/60
	5x5	0.36	0.36	6	0.34	0.34	6	N/A	0.43	0.43	9	0.62	0.62	6	0.59	0.59	6	N/A	0.43	0.43	9	5.5	60	60
	5x6	0.27	0.27	9	0.34	0.45	6	N/A	0.48	0.48	9	0.47	0.45	9	0.38	0.54	8	N/A	0.48	0.48	9	5.5	60/72	60/72
	6x6	0.27	0.27	9	0.45	0.45	6	N/A	0.56	0.56	9	0.52	0.52	9	0.54	0.54	8	N/A	0.56	0.56	9	6.5	72	72
	8x8	0.46	0.46	9	0.51	0.51	8	N/A	0.45	0.45	12	0.87	0.87	9	0.59	0.59	10	N/A	0.45	0.45	12	8.5	96	72
Precast Base (PB)	3x3	0.23	0.23	6	0.19	0.19	6	N/A	N/A	N/A	N/A	0.29	0.29	6	0.24	0.24	6	N/A	N/A	N/A	N/A	3.5	36	36
	4x4	0.29	0.29	6	0.24	0.24	6	N/A	N/A	N/A	N/A	0.47	0.47	6	0.38	0.38	6	N/A	N/A	N/A	N/A	4.5	48	48
	3x5	0.29	0.18	6	0.19	0.35	6	3x3	0.30	0.34	9	0.39	0.18	6	0.23	0.59	6	3x3	0.40	0.40	9	3.5	36/60	36/60
	4x5	0.36	0.18	6	0.22	0.34	6	3x3	0.30	0.30	9	0.53	0.26	6	0.39	0.59	6	3x3	0.46	0.37	9	4.5	48/60	48/60
	4x5	0.36	0.18	6	0.22	0.34	6	4x4	0.30	0.30	9	0.53	0.26	6	0.39	0.59	6	4x4	0.39	0.39	9	4.5	48/60	48/60
	4x5	0.36	0.18	6	0.22	0.34	6	48"	0.39	0.39	9	0.53	0.26	6	0.39	0.59	6	48"	0.47	0.47	9	4.5	48/60	48/60
	4x5	0.36	0.18	6	0.22	0.34	6	3x5	0.33	0.40	9	0.53	0.26	6	0.39	0.59	6	3x5	0.48	0.48	9	4.5	48/60	48/60
	5x5	0.36	0.36	6	0.34	0.34	6	3x3	0.34	0.34	9	0.62	0.62	6	0.59	0.59	6	3x3	0.53	0.53	9	5.5	60	60
	5x5	0.36	0.36	6	0.34	0.34	6	4x4	0.36	0.36	9	0.62	0.62	6	0.59	0.59	6	4x4	0.64	0.64	9	5.5	60	60
	5x5	0.38	0.38	6	0.34	0.34	6	48"	0.36	0.36	9	0.62	0.62	6	0.59	0.59	6	48"	0.64	0.64	9	5.5	60	60
	5x5	0.36	0.36	6	0.34	0.34	6	3x5	0.34	0.40	9	0.62	0.62	6	0.59	0.59	6	3x5	0.53	0.53	9	5.5	60	60
	5x6	0.31	0.31	9	0.34	0.45	6	3x3	0.34	0.34	9	0.47	0.45	9	0.38	0.54	8	3x3	0.61	0.50	9	5.5	60/72	60/72
	5x6	0.27	0.27	9	0.34	0.45	6	4x4	0.36	0.45	9	0.47	0.45	9	0.38	0.54	8	4x4	0.74	0.57	9	5.5	60/72	60/72
	5x6	0.29	0.29	9	0.34	0.45	6	48"	0.36	0.45	9	0.47	0.45	9	0.38	0.54	8	48"	0.74	0.57	9	5.5	60/72	60/72
	5x6	0.29	0.29	9	0.34	0.45	6	3x5	0.45	0.45	9	0.47	0.45	9	0.38	0.54	8	3x5	0.61	0.61	9	5.5	60/72	60/72
	6x6	0.29	0.29	9	0.45	0.45	6	3x3	0.41	0.41	9	0.52	0.52	9	0.54	0.54	8	3x3	0.74	0.74	9	6.5	72	72
	6x6	0.27	0.27	9	0.45	0.45	6	4x4	0.45	0.45	9	0.52	0.52	9	0.54	0.54	8	4x4	0.87	0.87	9	6.5	72	72
	6x6	0.29	0.29	9	0.45	0.45	6	48"	0.45	0.45	9	0.52	0.52	9	0.54	0.54	8	48"	0.87	0.87	9	6.5	72	72
	6x6	0.29	0.29	9	0.45	0.45	6	3x5	0.45	0.45	9	0.52	0.52	9	0.54	0.54	8	3x5	0.87	0.87	9	6.5	72	72
	8x8	0.52	0.52	9	0.51	0.51	8	3x3	0.61	0.61	12	0.91	0.91	9	0.70	0.70	10	3x3	0.85	0.85	12	8.5	96	72
	8x8	0.52	0.52	9	0.51	0.51	8	4x4	0.70	0.70	12	0.87	0.87	9	0.70	0.70	10	4x4	1.01	1.01	12	8.5	96	72
	8x8	0.52	0.52	9	0.51	0.51	8	48"	0.70	0.70	12	0.87	0.87	9	0.70	0.70	10	48"	1.01	1.01	12	8.5	96	72
	8x8	0.52	0.52	9	0.51	0.51	8	3x5	0.70	0.85	12	0.87	0.87	9	0.70	0.70	10	3x5	1.01	1.01	12	8.5	96	72

** Unless otherwise indicated.

FABRICATION NOTES:
1. Maximum spacing of reinforcement is 8".
2. At manufacturer's option, provide cast or cored holes or thin wall panels (KO) to the maximum diameter shown for each. When no penetration is required, it is acceptable to provide a wall with no sectional reduction.

GENERAL NOTES:
1. Precast Junction Box consists of base slab, base unit, risers (as required), and below grade slab. See sheet PJB for details.
2. Precast Base consists of base slab, base unit, risers (as required), reducing slab (as required), and reduced risers (as required). See sheet PB for details.
3. Min Height shown is for stock base units. Use stock base units whenever practical. Smaller height base units can be used in special installation circumstances, when noted elsewhere in the plans. Absolute minimum height of base units is 2'-6".

HL93 LOADING

Texas Department of Transportation | Bridge Division Standard

DESIGN DATA FOR PRECAST BASE AND JUNCTION BOX

PDD

FILE: prestd10.dgn	DN: TxDOT	CK: TxDOT	DW: TxDOT	CK: TxDOT
©TxDOT January 2015	CONT	SECT	JOB	HIGHWAY
REVISIONS				KLEIN RD
	DIST	COUNTY		SHEET NO.
	SAT	GUADALUPE		236

DISCLAIMER:
The use of this standard is governed by the "Texas Engineering Practice Act". No warranty of any kind is made by TxDOT for any purpose whatsoever. TxDOT assumes no responsibility for the conversion of this standard to other formats or for incorrect results or damages resulting from its use.

DATE: 1/9/2020 3:48:40 PM
FILE: H:\projects\5100\30\03\Design\Civil\Standards\Drainage\prestd10.dgn

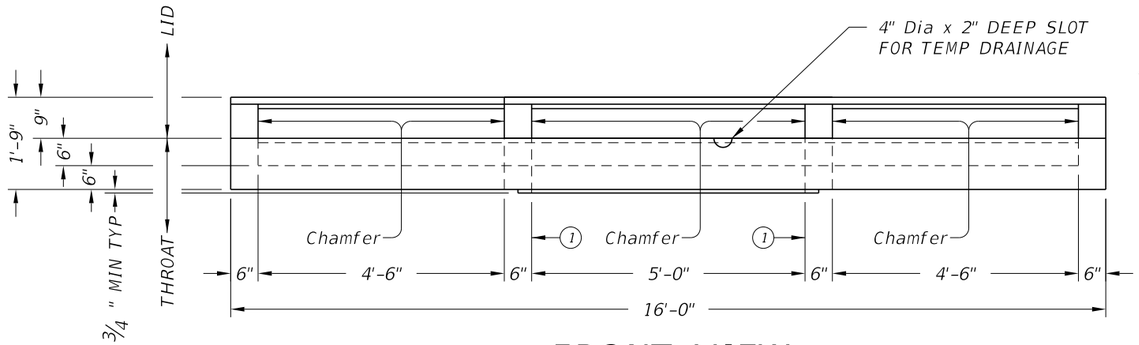

FRONT VIEW

(SHOWING LEFT AND RIGHT EXTENSIONS)

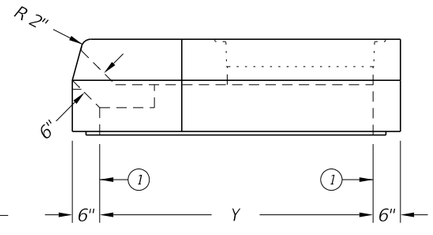

RIGHT VIEW

REAR VIEW

(EXTENSIONS NOT SHOWN)

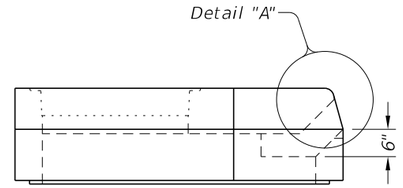

LEFT VIEW

1 Matches inside face of wall of precast base or riser below inlet.

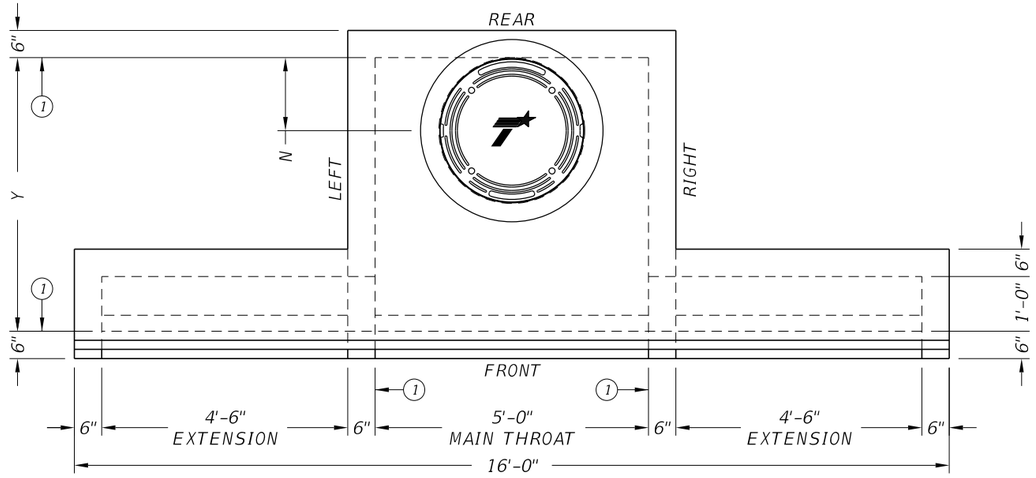

PLAN VIEW

(SHOWING LEFT AND RIGHT EXTENSIONS)

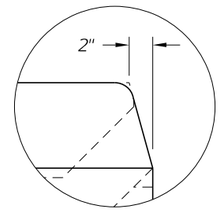

DETAIL "A"

HS20 LOADING

SHEET 1 OF 2

Texas Department of Transportation

Bridge Division Standard

PRECAST CURB INLET OUTSIDE ROADWAY

PCO

FILE: prestd03.dgn	DN: TxDOT	CK: TxDOT	DW: TxDOT	CK: TxDOT
©TxDOT January 2015	CONT	SECT	JOB	HIGHWAY
REVISIONS				KLEIN RD
	DIST	COUNTY		SHEET NO.
	SAT	GUADALUPE		237

DISCLAIMER:
The use of this standard is governed by the "Texas Engineering Practice Act". No warranty of any kind is made by TxDOT for any purpose whatsoever. TxDOT assumes no responsibility for the conversion of this standard to other formats or for incorrect results or damages resulting from its use.

DATE: 1/9/2020 3:48:42 PM
FILE: H:\Projects\510\30\03\Design\Civil\Standards\Drainage\prestd03.dgn

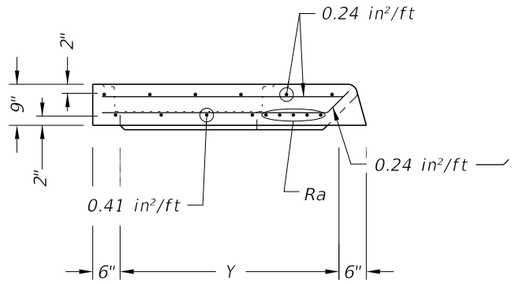

LID SECTION A-A

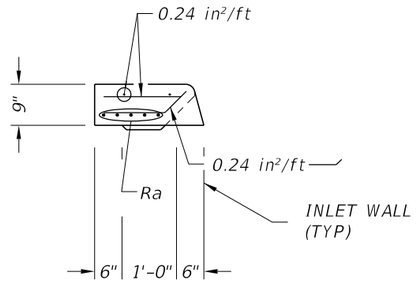

LID SECTION B-B

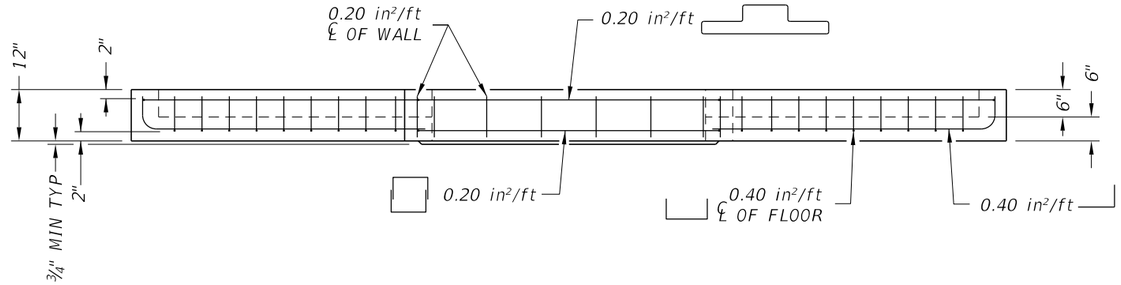

THROAT ELEVATION VIEW

(SHOWING LEFT AND RIGHT EXTENSIONS)

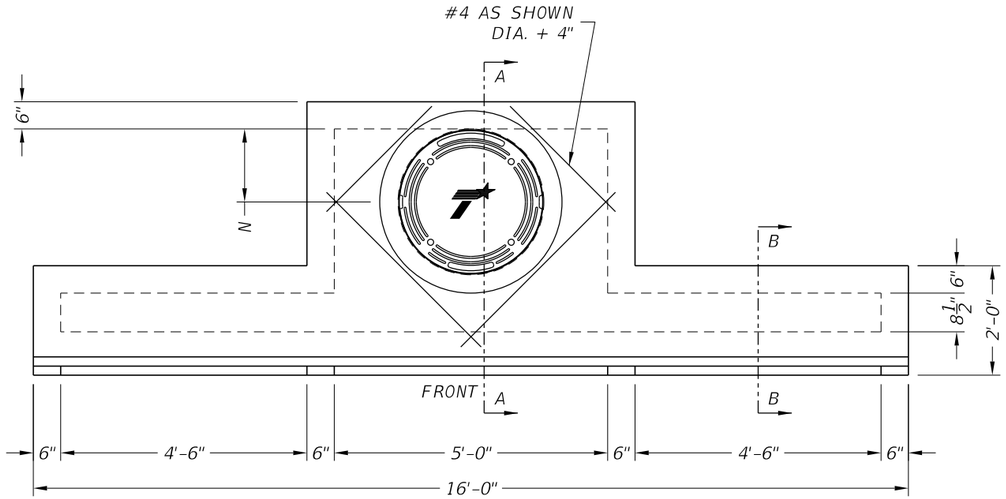

LID PLAN VIEW

(SHOWING LEFT AND RIGHT EXTENSIONS)

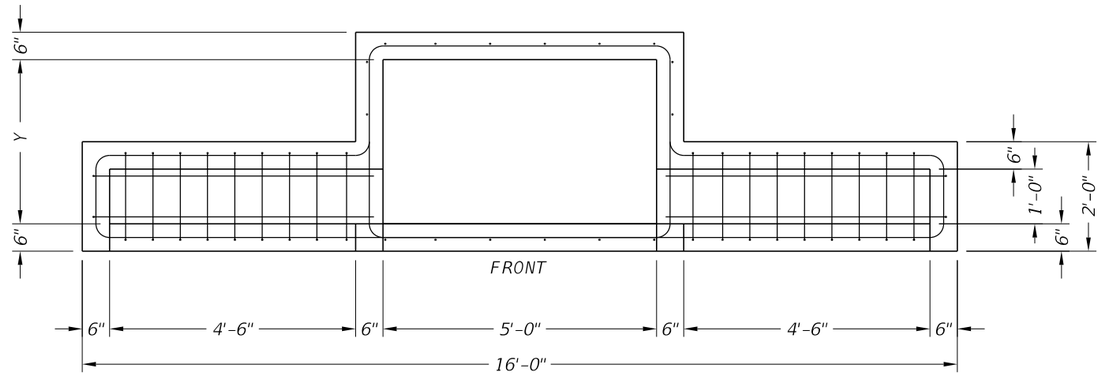

THROAT PLAN VIEW

(SHOWING LEFT AND RIGHT EXTENSIONS)

SIZE(Y)	N	MH DIA*	Ra
3'	9"	18"	(4) #5 Additional
4'	16"	32"	(4) #5 Additional
5'	16"	32"	(4) #5 Additional
6'	16"	32"	(4) #5 Additional

* Nominal ring and cover size.

FABRICATION NOTES:

1. Provide Class "H" concrete in accordance with Item 421 and having a minimum compressive strength of 5,000 psi.
2. Provide Grade 60 reinforcing steel or equivalent area of WWR.
3. Extensions may be right, left, both or none. Provide extensions as specified elsewhere in the plans.
4. Design tongue and groove joints for full closure on both shoulders. Minimum spigot depth is ¾". Lid may employ a butt joint with dowels at the Contractor's option.
5. Provide lifting devices in conformance with Manufacturer's recommendations.
6. Provide cast iron solid cover, unless noted otherwise elsewhere in the plans.
7. Chamfer vertical edges of inlet lid ¾" as shown in Front View, sheet 1.

INSTALLATION NOTES:

1. Inlet throat and lid are not intended for direct traffic. Do not place in roadway.
2. Seal tongue and groove joints and butt joints with preformed or bulk mastic in conformance with Manufacturer's recommendations. Tongue and groove joints may be grouted no more than 1" between each section, or ½ the joint depth, whichever is greater.
3. Do not grout rubber gasket joints without Manufacturer's recommendation.

GENERAL NOTES:

1. Designed according to ASTM C913.
2. Open area of main throat = 360 sq in. Open area of one extension throat = 324 sq in.
3. Payment for inlet is per Item 465, "Junction Boxes, Manholes, and Inlets" by type, size, and extension placement. Extensions are subsidiary to inlet.

Cover dimensions are clear dimensions, unless noted otherwise.

HS20 LOADING

Texas Department of Transportation

Bridge Division Standard

PRECAST CURB INLET OUTSIDE ROADWAY

PCO

FILE: prestd03.dgn	DN: TxDOT	CK: TxDOT	DW: TxDOT	CK: TxDOT
©TxDOT January 2015	CONT	SECT	JOB	HIGHWAY
REVISIONS				KLEIN RD
	DIST	COUNTY		SHEET NO.
	SAT	GUADALUPE		238

DISCLAIMER:
The use of this standard is governed by the "Texas Engineering Practice Act". No warranty of any kind is made by TxDOT for any purpose whatsoever. TxDOT assumes no responsibility for the conversion of this standard to other formats or for incorrect results or damages resulting from its use.

DATE: 1/9/2020 3:48:43 PM
FILE: H:\projects\510\30\03\Design\Civil\Standards\Drainage\prestd03.dgn

DISCLAIMER:
The use of this standard is governed by the "Texas Engineering Practice Act". No warranty of any kind is made by TxDOT for any purpose whatsoever. TxDOT assumes no responsibility for the conversion of this standard to other formats or for incorrect results or damages resulting from its use.

DATE: 1/9/2020 3:48:45 PM
FILE: H:\projects\510303\Design\Civil\Standards\Drainage\prestd05.dgn

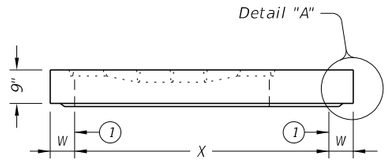

STYLE 'FG'

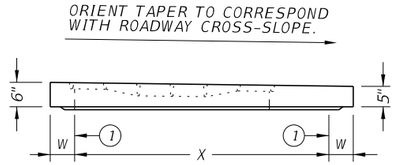

STYLE 'SFG'
ELEVATION VIEW

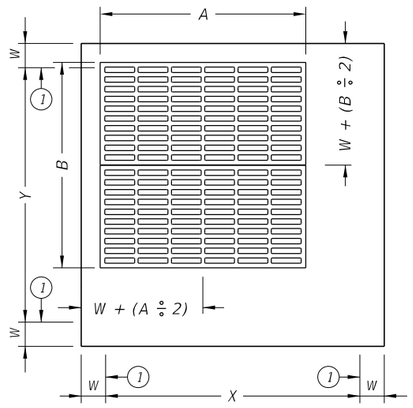

PLAN VIEW
CAST-IN FRAME & GRATE
STYLES 'FG' & 'SFG'

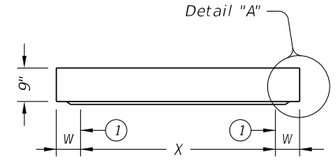

ELEVATION VIEW

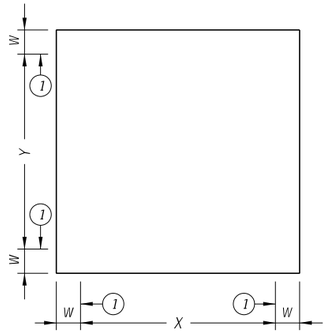

PLAN VIEW
NO OPENINGS
STYLE 'SL'

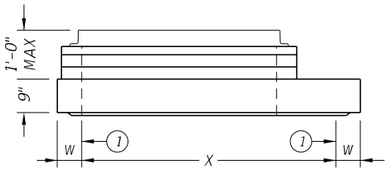

ELEVATION VIEW

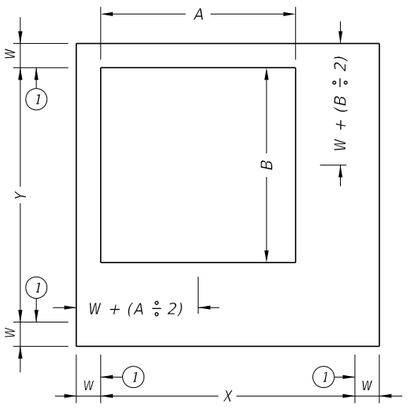

PLAN VIEW
SHIP LOOSE FRAME & GRATE
STYLE 'SH'

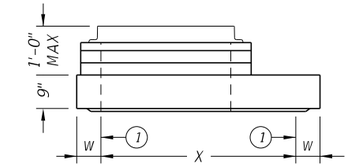

ELEVATION VIEW

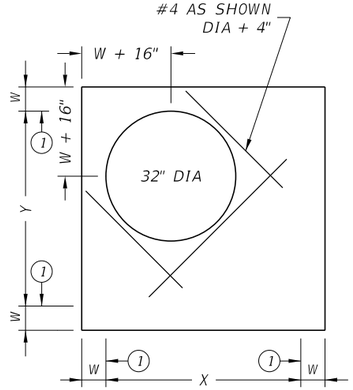

PLAN VIEW
SHIP LOOSE RING & COVER
STYLE 'RH'

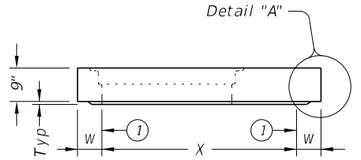

ELEVATION VIEW

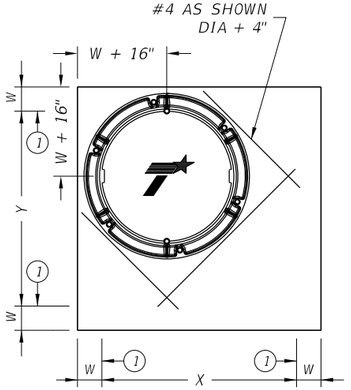

PLAN VIEW
32" DIA CAST-IN RING & COVER
STYLE 'RC'

PLAN VIEW
EXPOSED REBAR
STYLE 'S1'

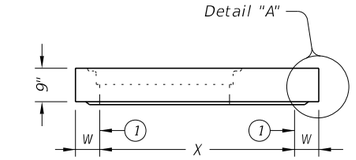

ELEVATION VIEW

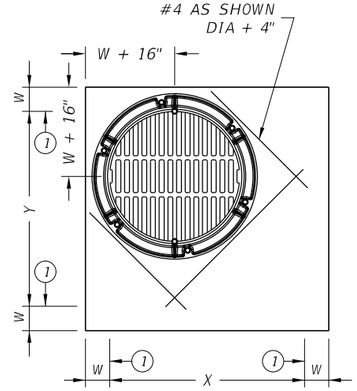

PLAN VIEW
32" DIA CAST-IN RING & GRATE
STYLE 'RG'

(1) Matches inside face of wall of precast base or riser below inlet.

HL93 LOADING SHEET 1 OF 2

Texas Department of Transportation

Bridge Division Standard

PRECAST SLAB LID

PSL

FILE: prestd05.dgn	DN: TxDOT	CK: TxDOT	DW: TxDOT	CK: TxDOT
©TxDOT January 2015	CONT	SECT	JOB	HIGHWAY
REVISIONS				KLEIN RD
	DIST	COUNTY		SHEET NO.
	SAT	GUADALUPE		239

Style	Size (X x Y)	W (2)	A x B (nominal)	Short Span Reinf Steel Area	Long Span Reinf Steel Area
SL	3'x3'	6"	n/a	0.37 in²/ft	0.37 in²/ft
RH,RC,RG,SH,S1,FG	3'x3'	6"	3'x3' or 32" Dia	0.37 in²/ft	0.37 in²/ft
SFG	3'x3'	6"	3'x3'	0.32 in²/ft	0.32 in²/ft
SL	4'x4'	6"	n/a	0.34 in²/ft	0.34 in²/ft
RH,RC,RG,SH,S1,FG	4'x4'	6"	3'x3' or 32" Dia	0.41 in²/ft	0.41 in²/ft
SH,S1,FG	4'x4'	6"	4'x4'	0.41 in²/ft	0.41 in²/ft
SFG	4'x4'	6"	4'x4'	0.32 in²/ft	0.32 in²/ft
SL	3'x5'	6"	n/a	0.39 in²/ft	0.39 in²/ft
RH,RC,RG,SH,S1,FG	3'x5'	6"	3'x3' or 32" Dia	0.48 in²/ft	0.48 in²/ft
SH,S1,FG	3'x5'	6"	3'x5'	0.48 in²/ft	0.48 in²/ft
SFG	3'x5'	6"	3'x5'	0.32 in²/ft	0.32 in²/ft
SL	4'x5'	6"	n/a	0.42 in²/ft	0.42 in²/ft
RH,RC,RG,SH,S1,FG	4'x5'	6"	3'x3' or 32" Dia	0.42 in²/ft	0.42 in²/ft
SH,S1,FG	4'x5'	6"	4'x4'	0.63 in²/ft	0.63 in²/ft
SH,S1,FG	4'x5'	6"	3'x5'	0.66 in²/ft	0.66 in²/ft
SL	5'x5'	6"	n/a	0.36 in²/ft	0.36 in²/ft
RH,RC,RG,SH,S1,FG	5'x5'	6"	3'x3' or 32" Dia	0.43 in²/ft	0.43 in²/ft
SH,S1,FG	5'x5'	6"	4'x4'	0.63 in²/ft	0.63 in²/ft
SH,S1,FG	5'x5'	6"	3'x5'	0.63 in²/ft	0.63 in²/ft
SL	5'x6'	6"/8"	n/a	0.48 in²/ft	0.48 in²/ft
RH,RC,RG,SH,S1,FG	5'x6'	6"/8"	3'x3' or 32" Dia	0.48 in²/ft	0.48 in²/ft
SH,S1,FG	5'x6'	6"/8"	4'x4'	0.60 in²/ft	0.60 in²/ft
SH,S1,FG	5'x6'	6"/8"	3'x5'	0.60 in²/ft	0.60 in²/ft
SL	6'x6'	6"/8"	n/a	0.43 in²/ft	0.43 in²/ft
RH,RC,RG,SH,S1,FG	6'x6'	6"/8"	3'x3' or 32" Dia	0.56 in²/ft	0.56 in²/ft
SH,S1,FG	6'x6'	6"/8"	4'x4'	0.56 in²/ft	0.56 in²/ft
SH,S1,FG	6'x6'	6"/8"	3'x5'	0.59 in²/ft	0.59 in²/ft
SL	8'x8'	8"/10"	n/a	0.45 in²/ft	0.45 in²/ft
RH,RC,RG,SH,S1,FG	8'x8'	8"/10"	3'x3' or 32" Dia	0.45 in²/ft	0.45 in²/ft
SH,S1,FG	8'x8'	8"/10"	4'x4'	0.45 in²/ft	0.45 in²/ft
SH,S1,FG	8'x8'	8"/10"	3'x5'	0.45 in²/ft	0.45 in²/ft

(2) See sheet PDD for corresponding wall thickness (W) of base unit or riser.

Construct cast-in-place reinforced concrete apron, when shown elsewhere in plans. Use Class "A" concrete. Apron is subsidiary to PSL. Apron is 1'-6" Min width around precast zone drain.

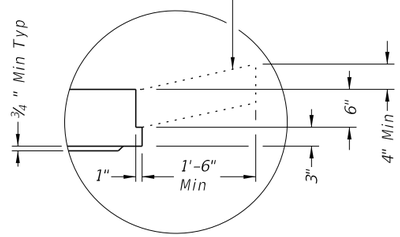

DETAIL "A"

(Reinforcing not shown for clarity)

When an apron is to be cast around PSL, use detail above to create an apron ledge on all 4 sides.

FABRICATION NOTES:

1. Locate penetration (Style 'RH'), ring and cover (Style 'RC'), ring and grate (Style 'RG'), and frame and grate (Style 'FG') in a corner. Only one penetration is allowed per slab lid.
2. Provide Class "H" concrete in accordance with Item 421 and having a minimum compressive strength of 5,000 psi.
3. Provide Grade 60 reinforcing steel or equivalent area of WWR.
4. Provide clear cover of ¾" to reinforcing from lower outside shoulder of slab for structural reinforcement, and 2" from top of slab for shrinkage and temperature reinforcement. Place short span reinforcing closest to surface.
5. Slabs with a thickness of 8" or greater require shrinkage and temperature reinforcing. Provide steel area = 0.11 in²/ft each way.
6. No substitution is allowed for diagonal #4 bars around openings.
7. Design tongue and groove joints for full closure on both shoulders. Minimum spigot depth is ¾".
8. Provide lifting devices in conformance with Manufacturer's recommendations.

INSTALLATION NOTES:

1. Precast slab lids are intended for direct traffic and may be placed in roadway.
2. Seal tongue and groove joints with preformed or bulk mastic in conformance with Manufacturer's recommendations. Tongue and groove joints may be grouted no more than 1" between each section, or ½ the joint depth, whichever is greater.
3. Do not grout rubber gasket joints without Manufacturer's recommendation.
4. Initial installation of grade adjustment rings for Styles 'RH' and 'SH' is limited to 1'-0" Max as shown.
5. Grade adjustment rings for Styles 'RH' and 'SH' may be increased to 2'-0" Max when future construction affects final grade of structure. Make adjustments greater than 2'-0" with additional risers. Adjustments can be made up to Max depth shown on sheet PDD. Structure must be evaluated if Max depth will be exceeded.
6. Orient long dimension of grate slots perpendicular to traffic, unless noted otherwise on plans

GENERAL NOTES:

1. Designed according to ASTM C913.
2. Payment for lid is per Item 465, "Junction Boxes, Manholes, and Inlets" by type, style, size, and opening size (when applicable).

Cover dimensions are clear dimensions, unless noted otherwise.

DISCLAIMER:
The use of this standard is governed by the "Texas Engineering Practice Act". No warranty of any kind is made by TxDOT for any purpose whatsoever. TxDOT assumes no responsibility for the conversion of this standard to other formats or for incorrect results or damages resulting from its use.

DATE: 1/9/2020 3:48:45 PM
FILE: H:\projects\510\30\03\Design\Civil\Standards\Drainage\prestd05.dgn

HL93 LOADING SHEET 2 OF 2

Texas Department of Transportation | Bridge Division Standard

PRECAST SLAB LID

PSL

FILE: prestd05.dgn	DN: TxDOT	CK: TxDOT	DW: TxDOT	CK: TxDOT
©TxDOT January 2015	CONT	SECT	JOB	HIGHWAY
REVISIONS				KLEIN RD
	DIST	COUNTY		SHEET NO.
	SAT	GUADALUPE		240

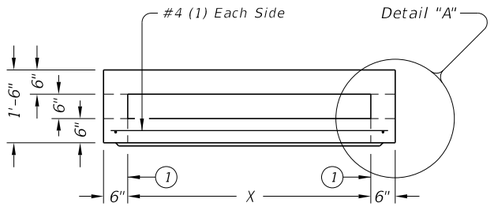

ELEVATION VIEW

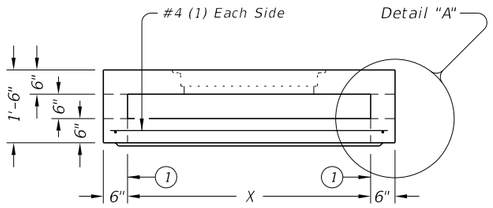

ELEVATION VIEW

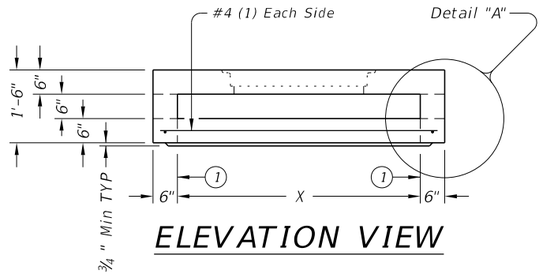

ELEVATION VIEW

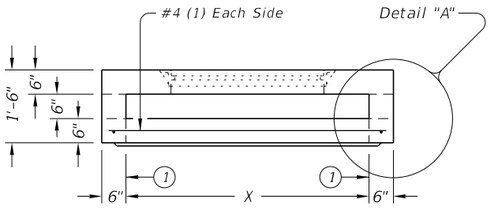

ELEVATION VIEW

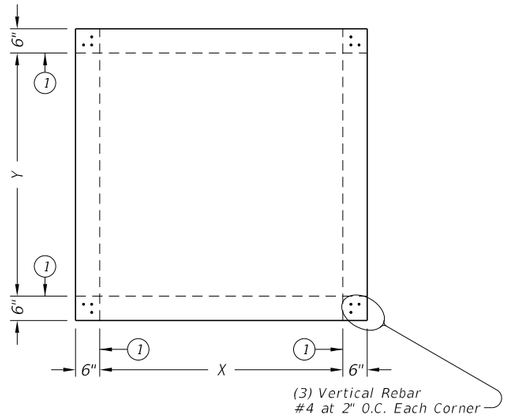

PLAN VIEW
NO OPENINGS

STYLE 'SL'

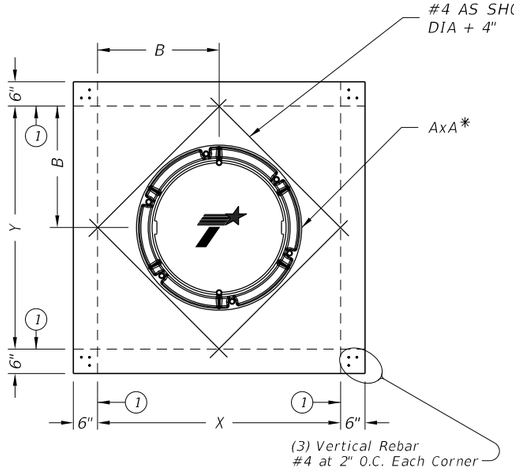

PLAN VIEW
32" DIA CAST-IN RING & COVER

STYLE 'RC'

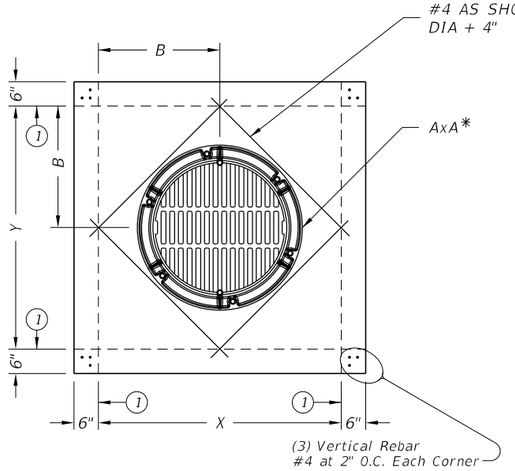

PLAN VIEW
32" DIA CAST-IN RING & GRATE

STYLE 'RG'

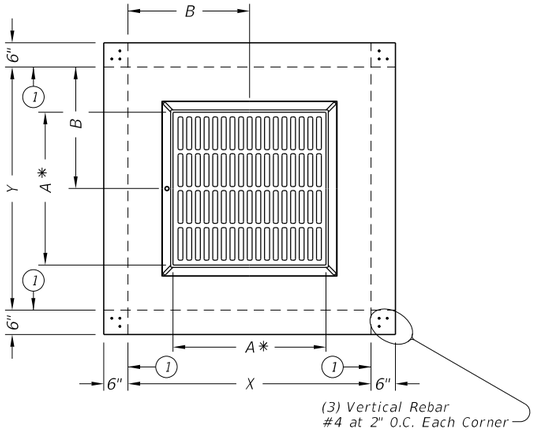

PLAN VIEW
CAST-IN FRAME & GRATE

STYLE 'FG'

Style	Size (X x Y)	A x A *	B x B	Short Span Reinf Steel Area	Long Span Reinf Steel Area
SL	3'x3'	n/a	n/a	0.37 in²/ft	0.37 in²/ft
RC,RG	3'x3'	32" Dia	1.5'x1.5'	0.37 in²/ft	0.37 in²/ft
FG	3'x3'	3'x3'	1.5'x1.5'	0.37 in²/ft	0.37 in²/ft
SL	4'x4'	n/a	n/a	0.34 in²/ft	0.34 in²/ft
RC,RG	4'x4'	32" Dia	2'x2'	0.34 in²/ft	0.34 in²/ft
FG	4'x4'	3'x3'	2'x2'	0.34 in²/ft	0.34 in²/ft
FG	4'x4'	4'x4'	2'x2'	0.34 in²/ft	0.34 in²/ft
SL	5'x5'	n/a	n/a	0.43 in²/ft	0.43 in²/ft
RC,RG	5'x5'	32" Dia	2.5'x2.5'	0.68 in²/ft	0.68 in²/ft
FG	5'x5'	3'x3'	2.5'x2.5'	0.43 in²/ft	0.43 in²/ft
FG	5'x5'	4'x4'	2.5'x2.5'	0.43 in²/ft	0.43 in²/ft

* Nominal frame/grate or ring/cover size.

(1) Matches inside face of wall of precast base or riser below inlet.

FABRICATION NOTES:
1. Provide Class "H" concrete in accordance with Item 421 and having a minimum compressive strength of 5,000 psi.
2. Provide Grade 60 reinforcing steel or equivalent area of WWR.
3. Provide clear cover of ¾" to reinforcing from bottom of slab for structural reinforcement. Place short span reinforcing closest to surface.
4. No substitution is allowed for diagonal #4 bars around openings.
5. Design tongue and groove joints for full closure on both shoulders. Minimum spigot depth is ¾".
6. Provide lifting devices in conformance with Manufacturer's recommendations.

INSTALLATION NOTES:
1. PAZD is for use in ditches and medians outside of the horizontal clearance (clear zone). Precast Area Zone Drain is not intended for direct traffic and may not be placed in roadway.
2. Seal tongue and groove joints with preformed or bulk mastic in conformance with Manufacturer's recommendations. Tongue and groove joints may be grouted no more than 1" between each section, or ½ the joint depth, whichever is greater.
3. Do not grout rubber gasket joints without Manufacturer's recommendation.

GENERAL NOTES:
1. Designed according to ASTM C913.
2. Payment for inlet is per Item 465, "Junction Boxes, Manholes, and Inlets" by type, style, size, and opening size (when applicable).

Construct cast-in-place reinforced concrete apron when shown elsewhere in plans. Use Class "A" concrete. Apron is subsidiary to PAZD. Apron is 1'-6" Min width around precast zone drain.

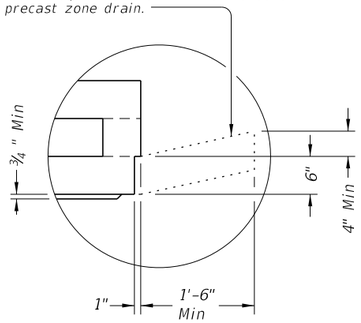

DETAIL "A"

(Reinforcing not shown for clarity)

When an apron is to be cast around PAZD, use detail above to create an apron ledge on all 4 sides.

Texas Department of Transportation

Bridge Division Standard

PRECAST AREA ZONE DRAIN

PAZD

FILE: prestd08.dgn	DN: TxDOT	CK: TxDOT	DW: TxDOT	CK: TxDOT
©TxDOT January 2015	CONT	SECT	JOB	HIGHWAY
REVISIONS				KLEIN RD
	DIST	COUNTY		SHEET NO.
	SAT	GUADALUPE		241

DISCLAIMER:
The use of this standard is governed by the "Texas Engineering Practice Act". No warranty of any kind is made by TxDOT for any purpose whatsoever. TxDOT assumes no responsibility for the conversion of this standard to other formats or for incorrect results or damages resulting from its use.

DATE: 1/9/2020 3:48:48 PM
FILE: H:\Projects\510\30\03\Design\Civil\Standards\Drainage\prestd08.dgn

DISCLAIMER:
The use of this standard is governed by the "Texas Engineering Practice Act". No warranty of any kind is made by TxDOT for any purpose whatsoever. TxDOT assumes no responsibility for the conversion of this standard to other formats or for incorrect results or damages resulting from its use.

DATE: 1/9/2020 3:48:50 PM
FILE: H:\projects\510\30\03\Design\Civil\Standards\Drainage\prestd13.dgn

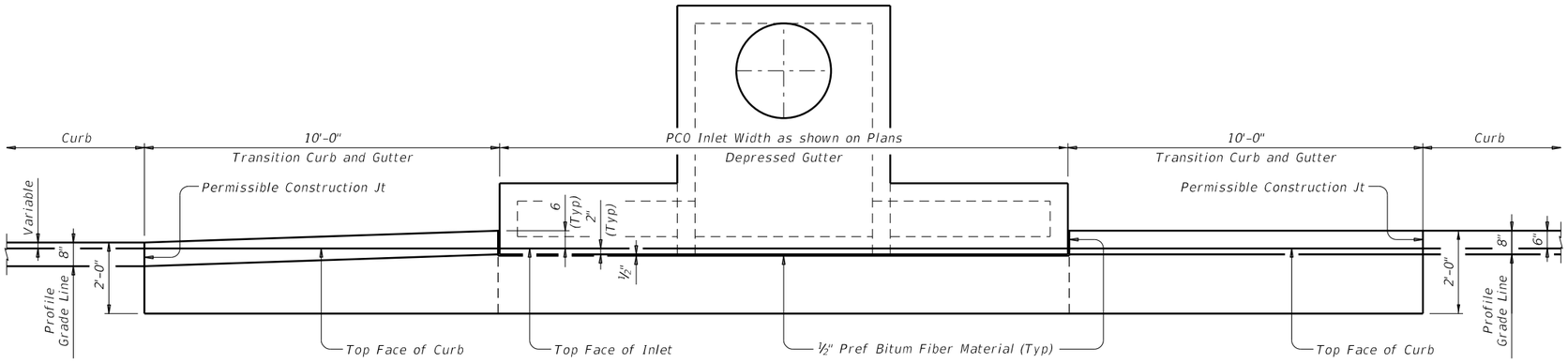

SHOWING TYPE I, IIa & III Curb and Gutter

SHOWING TYPE II & IV Curb and Gutter

PLAN

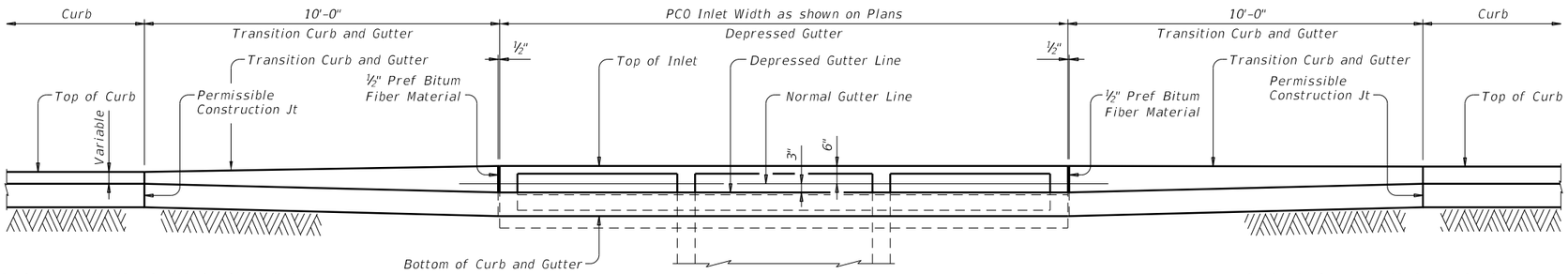

SHOWING TYPE I, IIa & III Curb and Gutter

SHOWING TYPE II & IV Curb and Gutter

ELEVATION

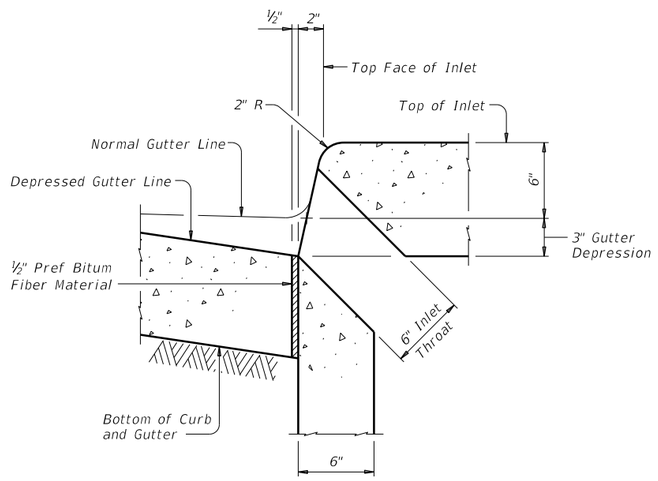

SECTION AT GUTTER AND INLET

Reinforcing steel not shown for clarity.

CONSTRUCTION NOTES:
Align top face of curb with PCO Inlet as shown.

MATERIAL NOTES:
Provide ½" Preformed Bituminous Fiber Material.

GENERAL NOTES:
See Precast Curb Inlet Outside Roadway (PCO) standard for details and notes not shown.
See Concrete Curb and Curb and Gutter (CCCG-12) standard for details and notes not shown.
Curb and Gutter Transitions is paid for and in accordance with Item 529, "Concrete Curb, Gutter, and Combined Curb and Gutter."
Preformed Bituminous Fiber Material is subsidiary to PCO Inlet.

Texas Department of Transportation

Bridge Division Standard

CURB AND GUTTER TRANSITION DETAILS FOR PCO INLET

CGT-PCO

FILE: prestd13.dgn	DN: TxDOT	CK: AES	DW: JTR	CK: AES
©TxDOT January 2015	CONT	SECT	JOB	HIGHWAY
REVISIONS				KLEIN RD
	DIST	COUNTY		SHEET NO.
	SAT	GUADALUPE		242

SITE DESCRIPTION

PROJECT LIMITS: *KLEIN RD FROM S WALNUT AVE TO FM 725*
Project Length = 5056 feet = 0.96 miles
Begin Project : STA 102+28.76
End Project : STA 152+85.12

PROJECT DESCRIPTION:

CONSISTING OF: ROADWAY RECONSTRUCTION, REPLACEMENT OF A LOW WATER CROSSING WITH A BRIDGE STRUCTURE, NEW STORM DRAIN SYSTEMS, BICYCLE AND PEDESTRIAN FACILITIES, ILLUMINATION, TRAFFIC SIGNALS, UTILITY RELOCATIONS, AND ROW ACQUISITION

MAJOR SOIL DISTURBING ACTIVITIES:

1. Install controls down-slope of work area and initiate inspection and maintenance activities.

2. Begin construction with interim stabilization practices. Adjust erosion and sedimentation controls during construction to meet requirements and changing conditions and as directed/approved by the engineer.

3. Soil disturbing activities will include widening, grading, excavation and embankment for roadway widening, drainage structure replacement and metal beam guard fence installation.

TOTAL PROJECT AREA: *Approximately 11.30 acre*

TOTAL AREA TO BE DISTURBED: *Approximately 11.30 acre*

EXISTING CONDITION OF SOIL & VEGETATIVE COVER AND % OF EXISTING VEGETATIVE COVER:

Description of existing vegetative cover: native grass

Percentage of existing vegetative cover: 80%

Existing vegetative cover: dense

NAME OF RECEIVING WATERS: *Guadalupe River Tributary 22*

EROSION AND SEDIMENT CONTROLS

SOIL STABILIZATION PRACTICES:

- [x] TEMPORARY SEEDING
- [x] PERMANENT PLANTING, SODDING, OR SEEDING
- [ ] MULCHING
- [ ] SOIL RETENTION BLANKET
- [ ] BUFFER ZONES
- [ ] OTHER

NOTE: *Stabilization measures must be initiated immediately in portions of the site where construction activities have temporarily ceased and will not resume for a period exceeding 14 calendar days. Stabilization measures that provide a protective cover must be initiated immediately in portions of the site where construction activities have permanently ceased.*

STRUCTURAL PRACTICES:

- [x] SILT FENCES
- [ ] HAY BALES
- [ ] SANDBAGS
- [ ] DIVERSION, INTERCEPTOR, OR PERIMETER DIKES
- [ ] DIVERSION, INTERCEPTOR, OR PERIMETER SWALES
- [ ] DIVERSION DIKE AND SWALE COMBINATIONS
- [x] ROCK FILTER DAMS
- [ ] PAVED FLUMES/RIPRAP
- [ ] ROCK BEDDING AT CONSTRUCTION EXIT
- [ ] TIMBER MATTING AT CONSTRUCTION EXIT
- [ ] CHANNEL LINERS
- [ ] SEDIMENT TRAPS/BASINS
- [ ] GABIONS
- [ ] STORM INLET SEDIMENT TRAP
- [ ] STONE OUTLET STRUCTURES
- [ ] CURBS AND GUTTERS
- [ ] STORM SEWERS
- [ ] VELOCITY CONTROL DEVICES
- [x] BIODEGRADABLE EROSION CONTROL LOGS

OTHER:

NARRATIVE - SEQUENCE OF CONSTRUCTION (STORM WATER MANAGEMENT) ACTIVITIES:

The order of activities will be as follows:

1. *Install structural practices as indicated above in ditches at structure locations.*
2. *Existing topsoil will be bladed and windrowed.*
3. *Construction activities begin.*
4. *Windrowed topsoil will be bladed back onto completed front slope. Then seed and sod all disturbed areas.*
5. *Remove all temporary controls and reseed or resod any areas disturbed by their removal.*

Contractor-generated schedules are incorporated into the projects SW3P by reference.

STORM WATER MANAGEMENT: *Storm Water Drainage will be provided by grass "flat bottom & V bottom" ditches. This system will carry drainage within the right of way to Elm Creek and Rocky Creek where cross drainage occurs. The cross drainage structures will be protected with structural practices as indicated above.*

Sediment control devices will remain in place until at least 70% regrowth of vegetation has occurred. At this time the new vegetation will act as a filter strip for post construction TSS control upon removal of the device.

A site (visual & odor) assessment of water quality leaving the project site: water quality leaving the construction site has been of good quality, with no visually apparent sediments, litter, fertilizers, or surfactants. The water has no petroleum or other odor. Even so, it might be expected that some sediment and litter will escape the project site and that petroleum products leaking from motor vehicles that travel through the site may lower the quality of runoff water.

OTHER EROSION AND SEDIMENT CONTROLS:

MAINTENANCE: *All erosion and sediment controls will be maintained in good working order. If a repair is necessary, it will be done at the earliest date possible, but no later than 7 calendar days after the surrounding exposed ground has dried sufficiently to prevent further damage from heavy equipment. The areas adjacent to creeks and drainage ways shall have priority followed by devices protecting storm sewer inlets. Sediment must be removed from control measures when the design capacity is reduced by 50 percent. If sediment escapes the construction site, off site accumulation of sediment must be removed at a frequency to minimize off-site impacts.*

INSPECTION: *An inspection will be performed by a City inspector at least every 7 calendar days. An Inspection and Maintenance Report will be made per each inspection. Based on the inspection results, the controls shall be revised per the inspection report.*

WASTE MATERIALS: *The contractor shall adequately store all construction waste materials to prevent these materials from becoming pollutants and to minimize pollutant discharges from the storage locations. No construction waste material will be buried on site or stored in 100-yr flood plain. Litter and construction chemicals shall be properly contained and prevented from becoming a pollutant in storm water discharge.*

Potential pollutants will primarily be from the sediments leaving the project right-of-way and petroleum products. Principal sources of pollution will be disturbed soil from grading and excavating and other roadway construction activities, litter and debris from construction activities, gasoline, oil, and grease from asphalt distributor vehicles, scrappers, trucks, rollers, compactors, and fuel trucks during daily, routine operations.

The contractor will maintain a clean, orderly construction site. Construction waste including trash, rubble, scrap and vegetation shall be disposed of in lidded dumpsters or in a manner approved by the Project Engineer. Disposal methods must meet Federal, State, and Local waste management guidelines. No construction waste will be buried or burned on site. Spoils disposal, material storage, and material resulting from the destruction of existing roads and structures shall be stored in areas approved by the Project Engineer and protected from runoff. All waterways shall be cleared of temporary embankment, temporary bridges, matting, false work piling, debris, or other obstructions placed during construction operations, that are not part of the finished work, as soon as practicable. All excess soil generated by the construction will be collected and disposed of by the contractor. Disposal areas, stockpiles, and haul roads shall be constructed in a manner that will minimize and control the amount of sediment that may enter receiving waters. Disposal areas shall not be located in any wetland, water body, or stream bed.

HAZARDOUS WASTE (INCLUDING SPILL REPORTING): *At a minimum, any product in the following categories are considered to be hazardous: Paints, Acids for cleaning masonry surfaces, Cleaning Solvents, Asphalt Products, Chemical Additives for soil stabilization, or Concrete Curing Compounds and additives. In event of a spill which may be hazardous, the Spill Coordinator should be contacted immediately.*

SANITARY WASTE: *All sanitary waste will be collected from the portable units as necessary or as required by local regulation by a licensed sanitary waste management contractor.*

OFFSITE VEHICLE TRACKING:

- [ ] HAUL ROADS DAMPENED FOR DUST CONTROL
- [ ] LOADED HAUL TRUCKS TO BE COVERED WITH TARPAULIN
- [ ] EXCESS DIRT ON ROAD REMOVED DAILY
- [ ] STABILIZED CONSTRUCTION ENTRANCE

OTHER:

REMARKS: *Disposal areas, stockpiles, and haul roads shall be constructed in a manner that will minimize and control the amount of sediment that may enter receiving waters. Disposal areas shall not be located in any wetland, waterbody or streambed.*

On and off site project specific locations including borrow pits and equipment staging areas are under the control of the contractor. The contractor will be obligated to comply with the requirements of the construction general permit.

All waterways shall be cleared as soon as practicable of temporary embankment, temporary bridges, matting, falsework, piling, debris or other obstructions placed during construction operations that are not a part of the finished work.

TxDOT STORM WATER POLLUTION PREVENTION PLAN (SW3P)

Texas Department of Transportation
© 2015 by Texas Department of Transportation
all rights reserved

FED.RD. DIV.NO.	FEDERAL AID PROJECT NO.		SHEET NO.
6			243
STATE	DIST.	COUNTY	
TEXAS	SAT	GUADALUPE	
CONT.	SECT.	JOB	HIGHWAY NO.
			KLEIN RD

LEVELS DISPLAYED
1 2 3 4 5 6 7 8 9 10 11 12 13 14 15 16
17 18 19 20 21 22 23 24 25 26 27 28 29 30 31 32
33 34 35 36 37 38 39 40 41 42 43 44 45 46 47 48
49 50 51 52 53 54 55 56 57 58 59 60 61 62 63
Design Filename: H:\Projects\510\30\03\Design\Civil\Standards\SW3P\sw3pexp.dgn

Plotted on: 1/9/2020

Design Filename: H:\Projects\510\30\03\Design\Civil\SW3P\Phase1\5103003sw3p101.dgn

ITEM	DESCRIPTION	UNIT	QTY
0506-6020	CONSTRUCTION EXITS (INSTALL) (TY 1)	SY	111
0506-6024	CONSTRUCTION EXITS (REMOVE)	SY	111

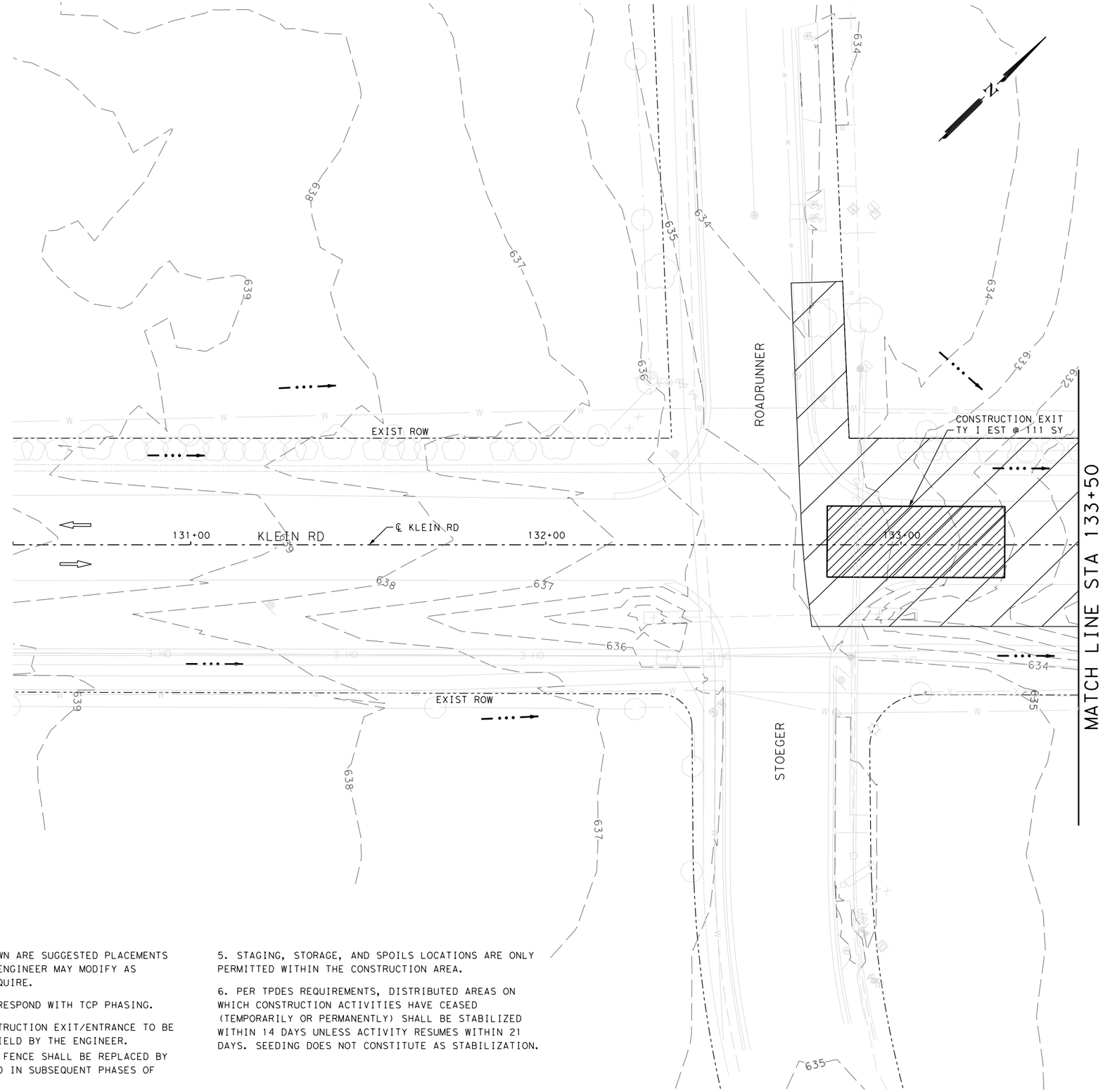

LEGEND

- TRAFFIC FLOW ARROWS
- FLOW ARROW
- SCF — SEDIMENT CONTROL FENCE
- RFD2 — TY 2 ROCK FILTER DAM
- RFD3 — TY 3 ROCK FILTER DAM
- CONSTRUCTION EXIT
- CL-CI — EROSION CONTROL LOG
- CONSTRUCTION PHASE
- WETLAND AREA

NOTES:

1. THE MEASURES SHOWN ARE SUGGESTED PLACEMENTS OF SW3P ITEMS. THE ENGINEER MAY MODIFY AS FIELD CONDITIONS REQUIRE.
2. SW3P LAYOUTS CORRESPOND WITH TCP PHASING.
3. LOCATION OF CONSTRUCTION EXIT/ENTRANCE TO BE DETERMINED IN THE FIELD BY THE ENGINEER.
4. SEDIMENT CONTROL FENCE SHALL BE REPLACED BY CONTRACTOR AS NEEDED IN SUBSEQUENT PHASES OF CONSTRUCTION.
5. STAGING, STORAGE, AND SPOILS LOCATIONS ARE ONLY PERMITTED WITHIN THE CONSTRUCTION AREA.
6. PER TPDES REQUIREMENTS, DISTRIBUTED AREAS ON WHICH CONSTRUCTION ACTIVITIES HAVE CEASED (TEMPORARILY OR PERMANENTLY) SHALL BE STABILIZED WITHIN 14 DAYS UNLESS ACTIVITY RESUMES WITHIN 21 DAYS. SEEDING DOES NOT CONSTITUTE AS STABILIZATION.

DESIGN

INTERIM REVIEW
DOCUMENT INCOMPLETE. NOT INTENDED FOR PERMIT, BIDDING OR CONSTRUCTION.
ENGINEER: TYLER PAYNE DUBE
P.E. SERIAL NO: 118612
DATE: 1/9/2020

APPROVAL

INTERIM REVIEW
DOCUMENT INCOMPLETE. NOT INTENDED FOR PERMIT, BIDDING OR CONSTRUCTION.
ENGINEER: JOHN A. TYLER
P.E. SERIAL NO: 105193
DATE: 1/9/2020

0 10 20 30 60

SCALE: PLAN 1" = 30'

REV. NO.	DATE	DESCRIPTION	BY

PAPE-DAWSON ENGINEERS
SAN ANTONIO | AUSTIN | HOUSTON | FORT WORTH | DALLAS
2000 NW LOOP 410 | SAN ANTONIO, TX 78213 | 210.375.9000
TBPE FIRM REGISTRATION #470 | TBPLS FIRM REGISTRATION #10028800

City of New Braunfels

KLEIN RD PHASE 2

SW3P LAYOUT PHASE 1 STEP 1

SHEET 1 OF 5

DGN:	STATE	PROJECT NO.	ROADWAY
CHK DGN:	TEXAS	NB 18-026	KLEIN RD
DWG:	COUNTY	CITY	SHEET NO.
CHK DWG:	GUADALUPE	NEW BRAUNFELS	244

Plotted on: 1/9/2020

Design Filename: H:\Projects\510\30\03\Design\Civil\SW3P\Phase1\5103003sw3p102.dgn

ITEM	DESCRIPTION	UNIT	QTY
0506-6002	ROCK FILTER DAMS (INSTALL) (TY 2)	LF	15
0506-6003	ROCK FILTER DAMS (INSTALL) (TY 3)	LF	220
0506-6011	ROCK FILTER DAMS (REMOVE)	LF	235
0506-6038	TEMP SEDMT CONT FENCE (INSTALL)	LF	100
0506-6039	TEMP SEDMT CONT FENCE (REMOVE)	LF	100
0506-6041	BIODEG EROSN CONT LOGS (INSTL) (12")	LF	40
0506-6043	BIODEG EROSN CONT LOGS (REMOVE)	LF	40

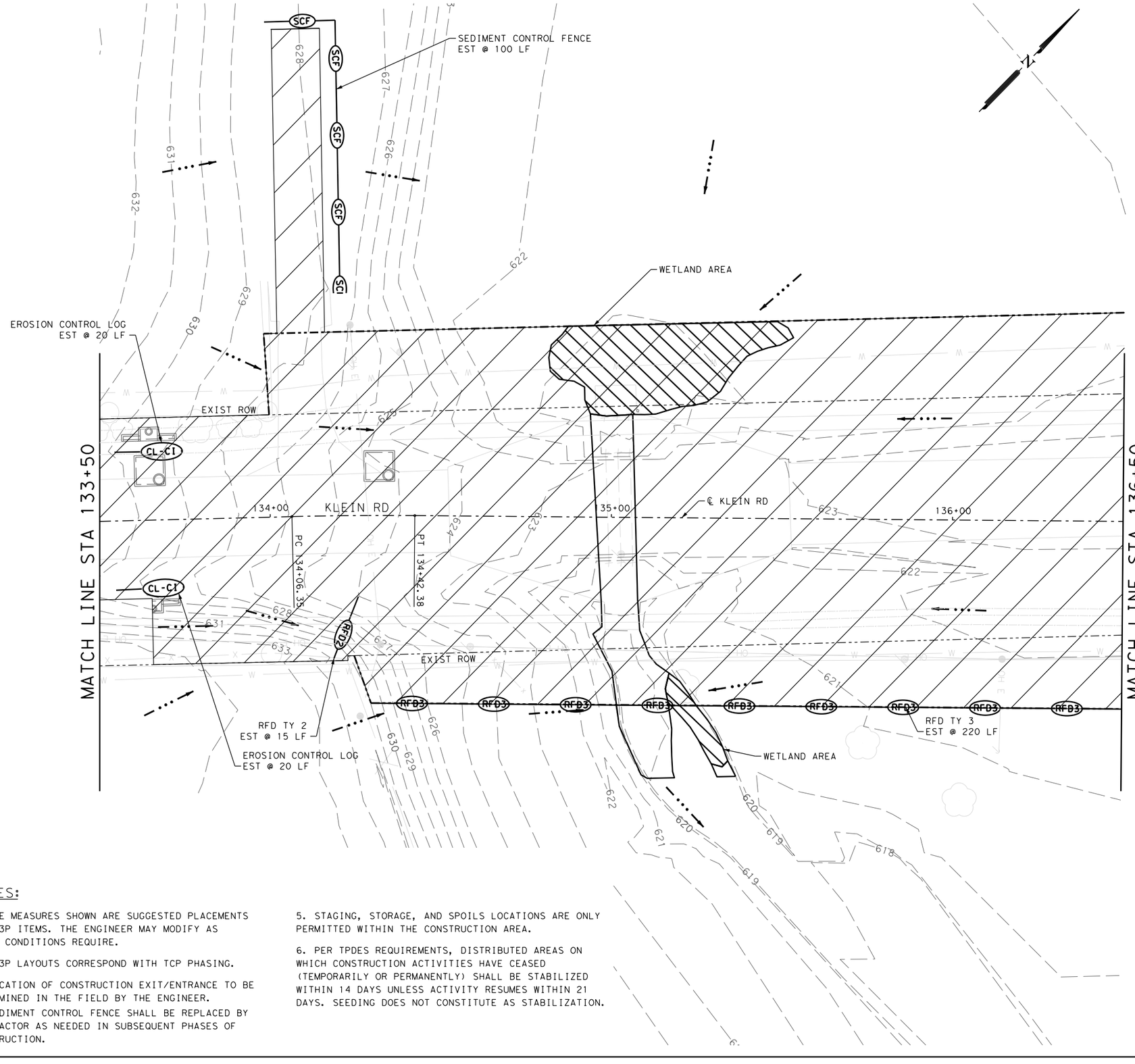

LEGEND

- TRAFFIC FLOW ARROWS
- FLOW ARROW
- SCF — SEDIMENT CONTROL FENCE
- RFD2 — TY 2 ROCK FILTER DAM
- RFD3 — TY 3 ROCK FILTER DAM
- CONSTRUCTION EXIT
- CL-CI — EROSION CONTROL LOG
- CONSTRUCTION PHASE
- WETLAND AREA

NOTES:

1. THE MEASURES SHOWN ARE SUGGESTED PLACEMENTS OF SW3P ITEMS. THE ENGINEER MAY MODIFY AS FIELD CONDITIONS REQUIRE.
2. SW3P LAYOUTS CORRESPOND WITH TCP PHASING.
3. LOCATION OF CONSTRUCTION EXIT/ENTRANCE TO BE DETERMINED IN THE FIELD BY THE ENGINEER.
4. SEDIMENT CONTROL FENCE SHALL BE REPLACED BY CONTRACTOR AS NEEDED IN SUBSEQUENT PHASES OF CONSTRUCTION.
5. STAGING, STORAGE, AND SPOILS LOCATIONS ARE ONLY PERMITTED WITHIN THE CONSTRUCTION AREA.
6. PER TPDES REQUIREMENTS, DISTRIBUTED AREAS ON WHICH CONSTRUCTION ACTIVITIES HAVE CEASED (TEMPORARILY OR PERMANENTLY) SHALL BE STABILIZED WITHIN 14 DAYS UNLESS ACTIVITY RESUMES WITHIN 21 DAYS. SEEDING DOES NOT CONSTITUTE AS STABILIZATION.

DESIGN

INTERIM REVIEW
DOCUMENT INCOMPLETE. NOT INTENDED FOR PERMIT, BIDDING OR CONSTRUCTION.
ENGINEER: TYLER PAYNE DUBE
P.E. SERIAL NO: 118612
DATE: 1/9/2020

APPROVAL

INTERIM REVIEW
DOCUMENT INCOMPLETE. NOT INTENDED FOR PERMIT, BIDDING OR CONSTRUCTION.
ENGINEER: JOHN A. TYLER
P.E. SERIAL NO: 105193
DATE: 1/9/2020

0 10 20 30 60
SCALE: PLAN 1"= 30'

REV. NO.	DATE	DESCRIPTION	BY

PAPE-DAWSON ENGINEERS
SAN ANTONIO | AUSTIN | HOUSTON | FORT WORTH | DALLAS
2000 NW LOOP 410 | SAN ANTONIO, TX 78213 | 210.375.9000
TBPE FIRM REGISTRATION #470 | TBPLS FIRM REGISTRATION #10028800

City of New Braunfels

KLEIN RD PHASE 2

SW3P LAYOUT PHASE 1 STEP 1

SHEET 2 OF 5

DGN:	STATE	PROJECT NO.	ROADWAY
CHK DGN:	TEXAS	NB 18-026	KLEIN RD
DWG:	COUNTY	CITY	SHEET NO.
CHK DWG:	GUADALUPE	NEW BRAUNFELS	245

Plotted on: 1/9/2020

Design Filename: H:\Projects\510\30\03\Design\Civil\SW3P\Phase1\5103003sw3p103.dgn

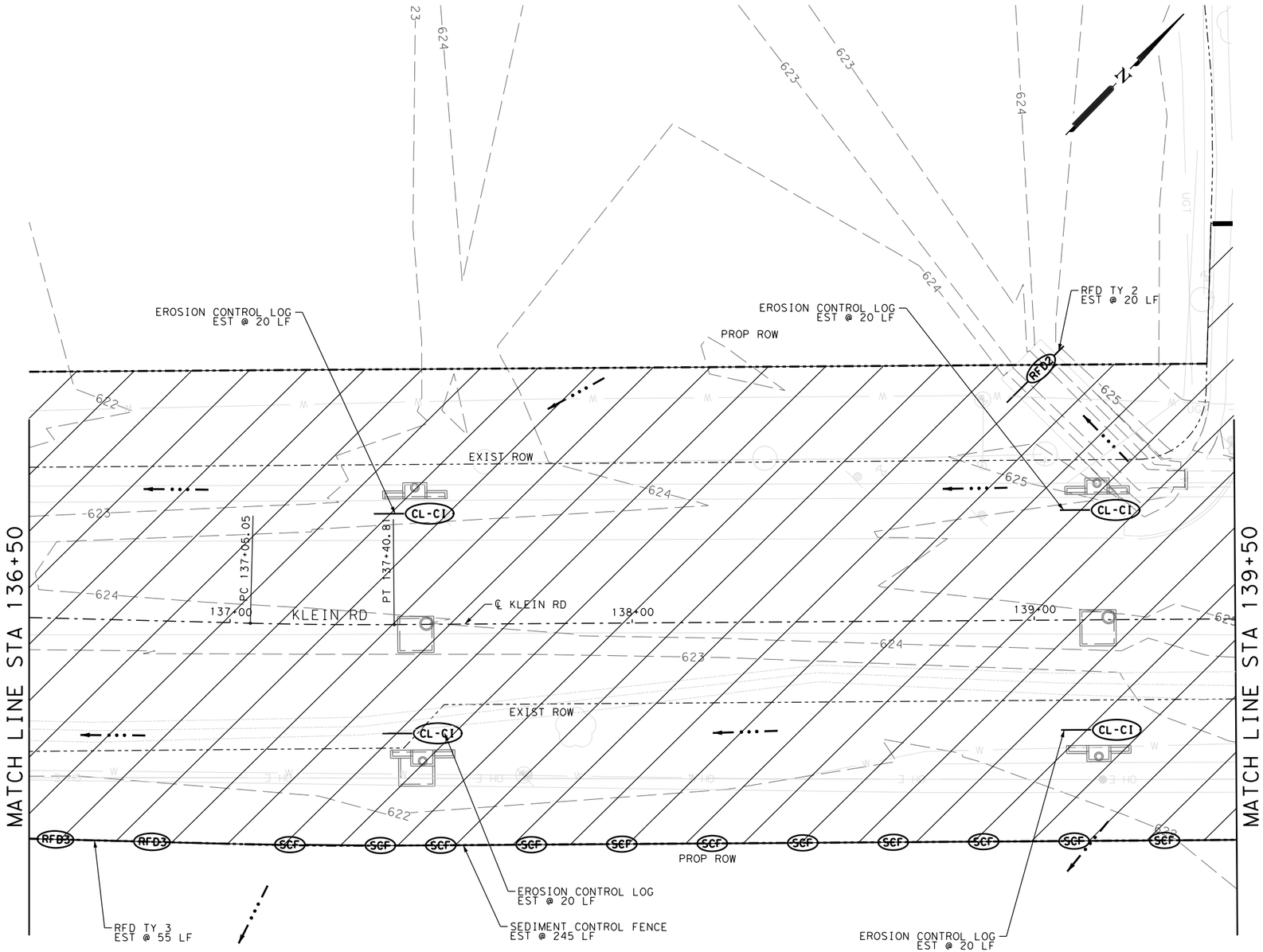

ITEM	DESCRIPTION	UNIT	QTY
0506-6002	ROCK FILTER DAMS (INSTALL) (TY 2)	LF	20
0506-6003	ROCK FILTER DAMS (INSTALL) (TY 3)	LF	55
0506-6011	ROCK FILTER DAMS (REMOVE)	LF	75
0506-6038	TEMP SEDMT CONT FENCE (INSTALL)	LF	245
0506-6039	TEMP SEDMT CONT FENCE (REMOVE)	LF	245
0506-6041	BIODEG EROSN CONT LOGS (INSTL) (12")	LF	80
0506-6043	BIODEG EROSN CONT LOGS (REMOVE)	LF	80

LEGEND

- TRAFFIC FLOW ARROWS
- FLOW ARROW
- SCF — SEDIMENT CONTROL FENCE
- RFD2 — TY 2 ROCK FILTER DAM
- RFD3 — TY 3 ROCK FILTER DAM
- CONSTRUCTION EXIT
- CL-CI — EROSION CONTROL LOG
- CONSTRUCTION PHASE
- WETLAND AREA

NOTES:

1. THE MEASURES SHOWN ARE SUGGESTED PLACEMENTS OF SW3P ITEMS. THE ENGINEER MAY MODIFY AS FIELD CONDITIONS REQUIRE.
2. SW3P LAYOUTS CORRESPOND WITH TCP PHASING.
3. LOCATION OF CONSTRUCTION EXIT/ENTRANCE TO BE DETERMINED IN THE FIELD BY THE ENGINEER.
4. SEDIMENT CONTROL FENCE SHALL BE REPLACED BY CONTRACTOR AS NEEDED IN SUBSEQUENT PHASES OF CONSTRUCTION.
5. STAGING, STORAGE, AND SPOILS LOCATIONS ARE ONLY PERMITTED WITHIN THE CONSTRUCTION AREA.
6. PER TPDES REQUIREMENTS, DISTRIBUTED AREAS ON WHICH CONSTRUCTION ACTIVITIES HAVE CEASED (TEMPORARILY OR PERMANENTLY) SHALL BE STABILIZED WITHIN 14 DAYS UNLESS ACTIVITY RESUMES WITHIN 21 DAYS. SEEDING DOES NOT CONSTITUTE AS STABILIZATION.

DESIGN

INTERIM REVIEW

DOCUMENT INCOMPLETE. NOT INTENDED FOR PERMIT, BIDDING OR CONSTRUCTION.
ENGINEER: TYLER PAYNE DUBE
P.E. SERIAL NO: 118612
DATE: 1/9/2020

APPROVAL

INTERIM REVIEW

DOCUMENT INCOMPLETE. NOT INTENDED FOR PERMIT, BIDDING OR CONSTRUCTION.
ENGINEER: JOHN A. TYLER
P.E. SERIAL NO: 105193
DATE: 1/9/2020

0 10 20 30 60

SCALE: PLAN 1"= 30'

REV. NO.	DATE	DESCRIPTION	BY

PAPE-DAWSON ENGINEERS
SAN ANTONIO | AUSTIN | HOUSTON | FORT WORTH | DALLAS
2000 NW LOOP 410 | SAN ANTONIO, TX 78213 | 210.375.9000
TBPE FIRM REGISTRATION #470 | TBPLS FIRM REGISTRATION #10028800

City of New Braunfels

KLEIN RD PHASE 2

SW3P LAYOUT PHASE 1 STEP 1

SHEET 3 OF 5

DGN:	STATE	PROJECT NO.	ROADWAY
CHK DGN:	TEXAS	NB 18-026	KLEIN RD
DWG:	COUNTY	CITY	SHEET NO.
CHK DWG:	GUADALUPE	NEW BRAUNFELS	246

ITEM	DESCRIPTION	UNIT	QTY
0506-6038	TEMP SEDMT CONT FENCE (INSTALL)	LF	356
0506-6039	TEMP SEDMT CONT FENCE (REMOVE)	LF	356
0506-6041	BIODEG EROSN CONT LOGS (INSTL) (12")	LF	20

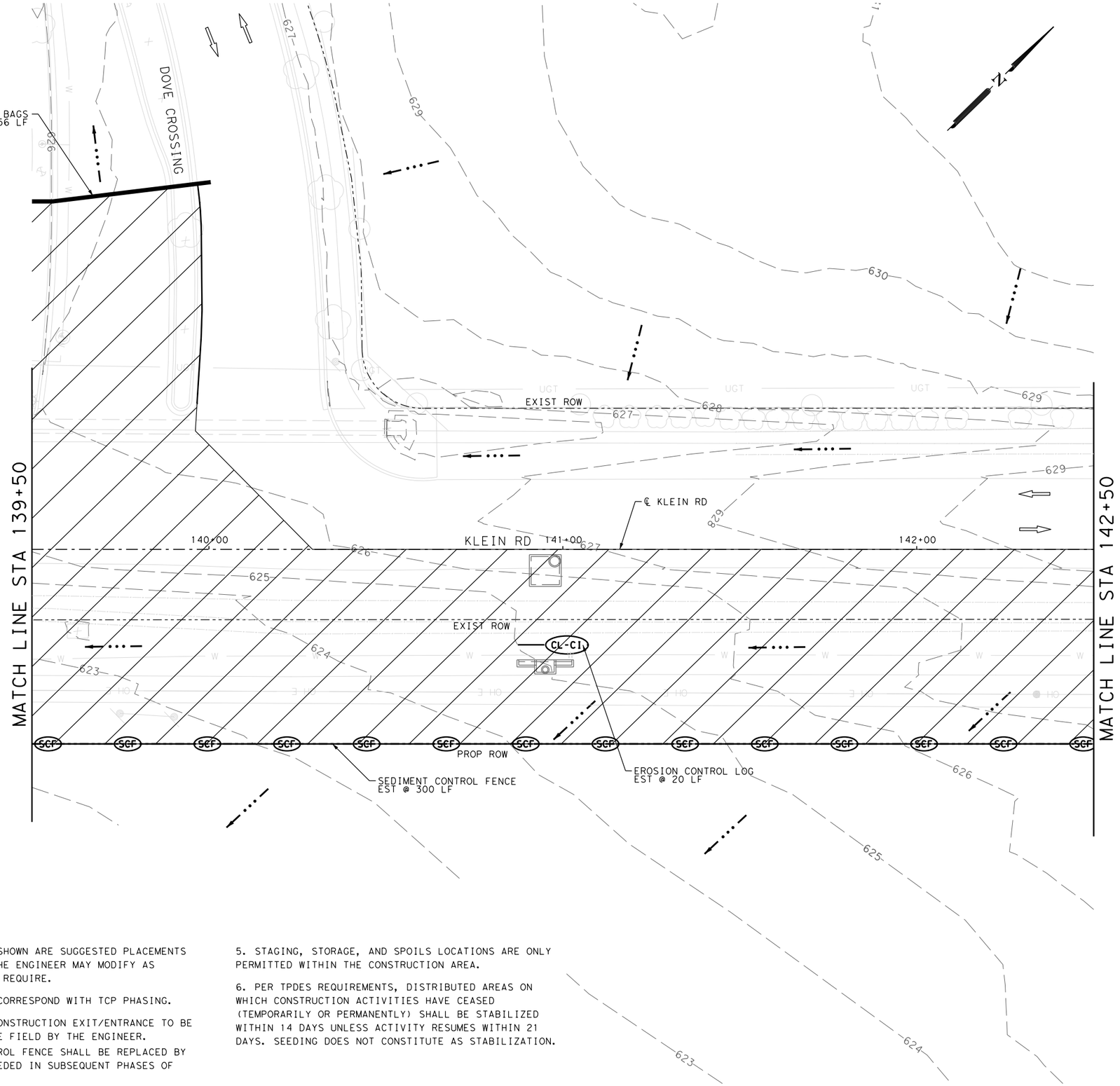

LEGEND

- TRAFFIC FLOW ARROWS
- FLOW ARROW
- SCF — SEDIMENT CONTROL FENCE
- RFD2 — TY 2 ROCK FILTER DAM
- RFD3 — TY 3 ROCK FILTER DAM
- CONSTRUCTION EXIT
- CL-C1 — EROSION CONTROL LOG
- CONSTRUCTION PHASE
- WETLAND AREA

NOTES:

1. THE MEASURES SHOWN ARE SUGGESTED PLACEMENTS OF SW3P ITEMS. THE ENGINEER MAY MODIFY AS FIELD CONDITIONS REQUIRE.
2. SW3P LAYOUTS CORRESPOND WITH TCP PHASING.
3. LOCATION OF CONSTRUCTION EXIT/ENTRANCE TO BE DETERMINED IN THE FIELD BY THE ENGINEER.
4. SEDIMENT CONTROL FENCE SHALL BE REPLACED BY CONTRACTOR AS NEEDED IN SUBSEQUENT PHASES OF CONSTRUCTION.
5. STAGING, STORAGE, AND SPOILS LOCATIONS ARE ONLY PERMITTED WITHIN THE CONSTRUCTION AREA.
6. PER TPDES REQUIREMENTS, DISTRIBUTED AREAS ON WHICH CONSTRUCTION ACTIVITIES HAVE CEASED (TEMPORARILY OR PERMANENTLY) SHALL BE STABILIZED WITHIN 14 DAYS UNLESS ACTIVITY RESUMES WITHIN 21 DAYS. SEEDING DOES NOT CONSTITUTE AS STABILIZATION.

DESIGN

INTERIM REVIEW

DOCUMENT INCOMPLETE. NOT INTENDED FOR PERMIT, BIDDING OR CONSTRUCTION.
ENGINEER: TYLER PAYNE DUBE
P.E. SERIAL NO: 118612
DATE: 1/9/2020

APPROVAL

INTERIM REVIEW

DOCUMENT INCOMPLETE. NOT INTENDED FOR PERMIT, BIDDING OR CONSTRUCTION.
ENGINEER: JOHN A. TYLER
P.E. SERIAL NO: 105193
DATE: 1/9/2020

0 10 20 30 60

SCALE: PLAN 1"= 30'

REV. NO.	DATE	DESCRIPTION	BY

PAPE-DAWSON ENGINEERS
SAN ANTONIO | AUSTIN | HOUSTON | FORT WORTH | DALLAS
2000 NW LOOP 410 | SAN ANTONIO, TX 78213 | 210.375.9000
TBPE FIRM REGISTRATION #470 | TBPLS FIRM REGISTRATION #10028800

City of New Braunfels

KLEIN RD PHASE 2

SW3P LAYOUT PHASE 1 STEP 1

SHEET 4 OF 5

DGN:	STATE	PROJECT NO.	ROADWAY
CHK DGN:	TEXAS	NB 18-026	KLEIN RD
DWG:	COUNTY	CITY	SHEET NO.
CHK DWG:	GUADALUPE	NEW BRAUNFELS	247

Plotted on: 1/9/2020

Design Filename: H:\Projects\510\30\03\Design\Civil\SW3P\Phase1\5103003sw3p104.dgn

Plotted on: 1/9/2020

Design Filename: H:\Projects\510\30\03\Design\Civil\SW3P\Phase1\5103003sw3p105.dgn

ITEM	DESCRIPTION	UNIT	QTY
0506-6020	CONSTRUCTION EXITS (INSTALL) (TY 1)	SY	111
0506-6024	CONSTRUCTION EXITS (REMOVE)	SY	111
0506-6038	TEMP SEDMT CONT FENCE (INSTALL)	LF	25
0506-6039	TEMP SEDMT CONT FENCE (REMOVE)	LF	25
0506-6041	BIODEG EROSN CONT LOGS (INSTL) (12")	LF	20
0506-6043	BIODEG EROSN CONT LOGS (REMOVE)	LF	20

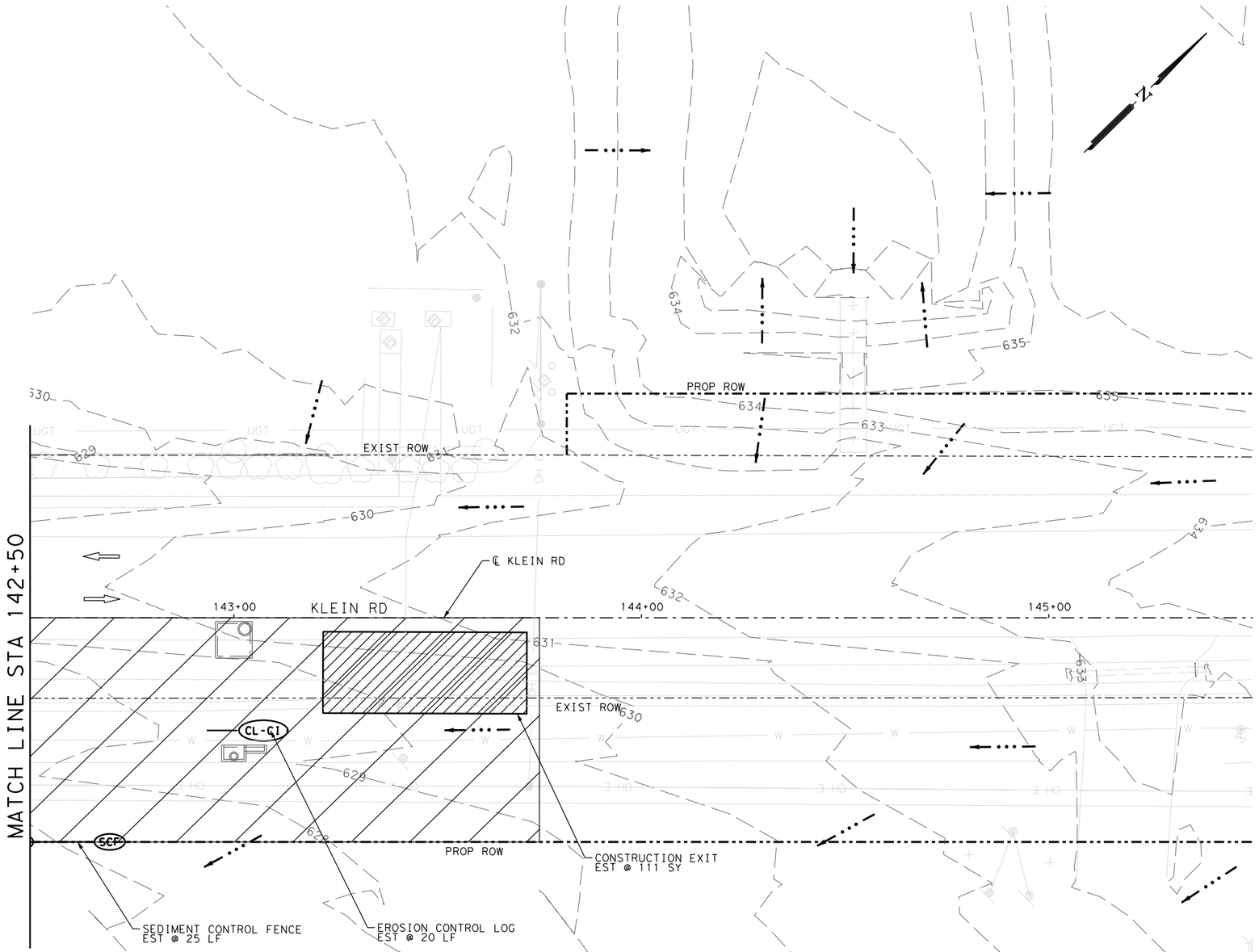

LEGEND

- TRAFFIC FLOW ARROWS
- FLOW ARROW
- SCF — SEDIMENT CONTROL FENCE
- RFD2 — TY 2 ROCK FILTER DAM
- RFD3 — TY 3 ROCK FILTER DAM
- CONSTRUCTION EXIT
- CL-CI — EROSION CONTROL LOG
- CONSTRUCTION PHASE
- WETLAND AREA

DESIGN

INTERIM REVIEW

DOCUMENT INCOMPLETE. NOT INTENDED FOR PERMIT, BIDDING OR CONSTRUCTION.
ENGINEER: TYLER PAYNE DUBE
P.E. SERIAL NO: 118612
DATE: 1/9/2020

APPROVAL

INTERIM REVIEW

DOCUMENT INCOMPLETE. NOT INTENDED FOR PERMIT, BIDDING OR CONSTRUCTION.
ENGINEER: JOHN A. TYLER
P.E. SERIAL NO: 105193
DATE: 1/9/2020

0 10 20 30 60

SCALE: PLAN 1"= 30'

REV. NO.	DATE	DESCRIPTION	BY

PAPE-DAWSON ENGINEERS
SAN ANTONIO | AUSTIN | HOUSTON | FORT WORTH | DALLAS
2000 NW LOOP 410 | SAN ANTONIO, TX 78213 | 210.375.9000
TBPE FIRM REGISTRATION #470 | TBPLS FIRM REGISTRATION #10028800

City of New Braunfels

KLEIN RD PHASE 2

SW3P LAYOUT PHASE 1 STEP 1

SHEET 5 OF 5

DGN:	STATE	PROJECT NO.	ROADWAY
CHK DGN:	TEXAS	NB 18-026	KLEIN RD
DWG:	COUNTY	CITY	SHEET NO.
CHK DWG:	GUADALUPE	NEW BRAUNFELS	248

NOTES:

1. THE MEASURES SHOWN ARE SUGGESTED PLACEMENTS OF SW3P ITEMS. THE ENGINEER MAY MODIFY AS FIELD CONDITIONS REQUIRE.
2. SW3P LAYOUTS CORRESPOND WITH TCP PHASING.
3. LOCATION OF CONSTRUCTION EXIT/ENTRANCE TO BE DETERMINED IN THE FIELD BY THE ENGINEER.
4. SEDIMENT CONTROL FENCE SHALL BE REPLACED BY CONTRACTOR AS NEEDED IN SUBSEQUENT PHASES OF CONSTRUCTION.
5. STAGING, STORAGE, AND SPOILS LOCATIONS ARE ONLY PERMITTED WITHIN THE CONSTRUCTION AREA.
6. PER TPDES REQUIREMENTS, DISTRIBUTED AREAS ON WHICH CONSTRUCTION ACTIVITIES HAVE CEASED (TEMPORARILY OR PERMANENTLY) SHALL BE STABILIZED WITHIN 14 DAYS UNLESS ACTIVITY RESUMES WITHIN 21 DAYS. SEEDING DOES NOT CONSTITUTE AS STABILIZATION.

Plotted on: 1/9/2020

Design Filename: H:\Projects\510\30\03\Design\Civil\SW3P\Phase1\5103003sw3p1A01.dgn

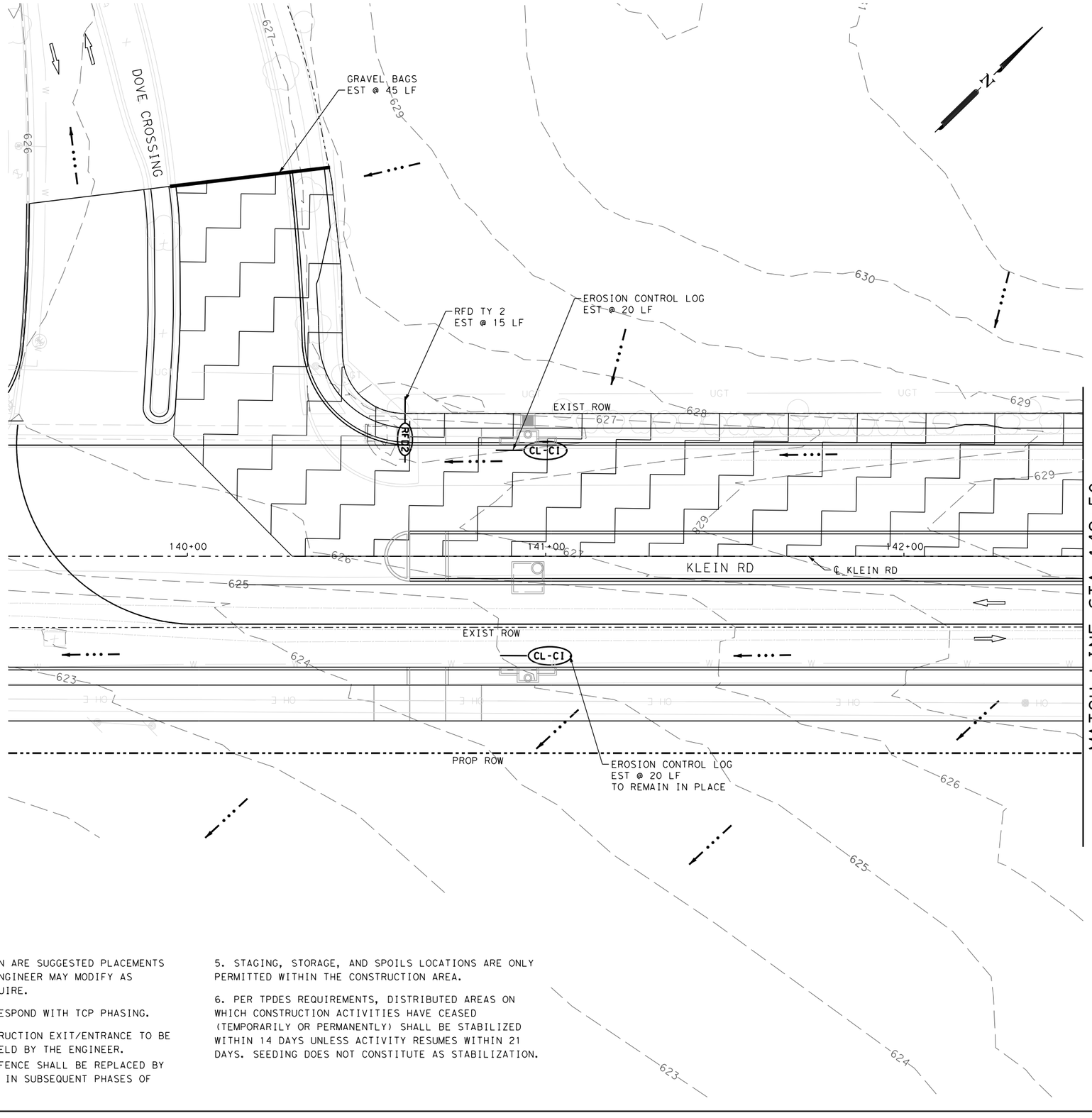

ITEM	DESCRIPTION	UNIT	QTY
0506-6002	ROCK FILTER DAMS (INSTALL) (TY 2)	LF	15
0506-6011	ROCK FILTER DAMS (REMOVE)	LF	15
0506-6038	TEMP SEDMT CONT FENCE (INSTALL)	LF	45
0506-6039	TEMP SEDMT CONT FENCE (REMOVE)	LF	45
0506-6041	BIODEG EROSN CONT LOGS (INSTL) (12")	LF	20
0506-6043	BIODEG EROSN CONT LOGS (REMOVE)	LF	40

LEGEND

- TRAFFIC FLOW ARROWS
- FLOW ARROW
- SCF — SEDIMENT CONTROL FENCE
- RFD2 — TY 2 ROCK FILTER DAM
- RFD3 — TY 3 ROCK FILTER DAM
- CONSTRUCTION EXIT
- CL-CI — EROSION CONTROL LOG
- CONSTRUCTION PHASE
- WETLAND AREA

NOTES:

1. THE MEASURES SHOWN ARE SUGGESTED PLACEMENTS OF SW3P ITEMS. THE ENGINEER MAY MODIFY AS FIELD CONDITIONS REQUIRE.
2. SW3P LAYOUTS CORRESPOND WITH TCP PHASING.
3. LOCATION OF CONSTRUCTION EXIT/ENTRANCE TO BE DETERMINED IN THE FIELD BY THE ENGINEER.
4. SEDIMENT CONTROL FENCE SHALL BE REPLACED BY CONTRACTOR AS NEEDED IN SUBSEQUENT PHASES OF CONSTRUCTION.
5. STAGING, STORAGE, AND SPOILS LOCATIONS ARE ONLY PERMITTED WITHIN THE CONSTRUCTION AREA.
6. PER TPDES REQUIREMENTS, DISTRIBUTED AREAS ON WHICH CONSTRUCTION ACTIVITIES HAVE CEASED (TEMPORARILY OR PERMANENTLY) SHALL BE STABILIZED WITHIN 14 DAYS UNLESS ACTIVITY RESUMES WITHIN 21 DAYS. SEEDING DOES NOT CONSTITUTE AS STABILIZATION.

DESIGN

INTERIM REVIEW

DOCUMENT INCOMPLETE. NOT INTENDED FOR PERMIT, BIDDING OR CONSTRUCTION.
ENGINEER: TYLER PAYNE DUBE
P.E. SERIAL NO: 118612
DATE: 1/9/2020

APPROVAL

INTERIM REVIEW

DOCUMENT INCOMPLETE. NOT INTENDED FOR PERMIT, BIDDING OR CONSTRUCTION.
ENGINEER: JOHN A. TYLER
P.E. SERIAL NO: 105193
DATE: 1/9/2020

0 10 20 30 60

SCALE: PLAN 1" = 30'

REV. NO.	DATE	DESCRIPTION	BY

PAPE-DAWSON ENGINEERS
SAN ANTONIO | AUSTIN | HOUSTON | FORT WORTH | DALLAS
2000 NW LOOP 410 | SAN ANTONIO, TX 78213 | 210.375.9000
TBPE FIRM REGISTRATION #470 | TBPLS FIRM REGISTRATION #10028800

City of New Braunfels

KLEIN RD PHASE 2

SW3P LAYOUT PHASE I STEP 2

SHEET 1 OF 2

DGN:	STATE	PROJECT NO.	ROADWAY
CHK DGN:	TEXAS	NB 18-026	KLEIN RD
DWG:	COUNTY	CITY	SHEET NO.
CHK DWG:	GUADALUPE	NEW BRAUNFELS	249

ITEM	DESCRIPTION	UNIT	QTY
0506-6020	CONSTRUCTION EXITS (INSTALL) (TY 1)	SY	111
0506-6024	CONSTRUCTION EXITS (REMOVE)	SY	111

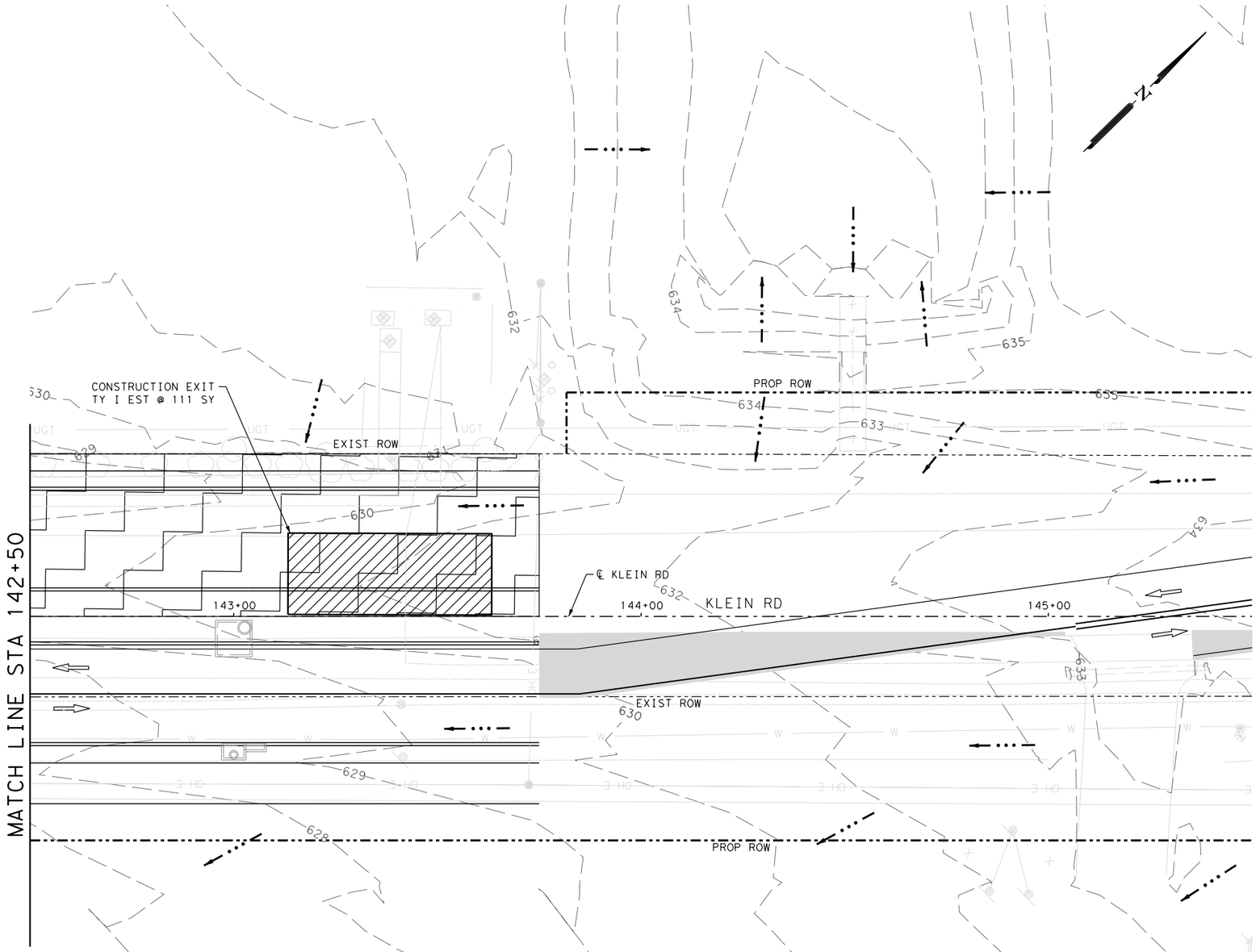

LEGEND

- TRAFFIC FLOW ARROWS
- FLOW ARROW
- SCF — SEDIMENT CONTROL FENCE
- RFD2 — TY 2 ROCK FILTER DAM
- RFD3 — TY 3 ROCK FILTER DAM
- CONSTRUCTION EXIT
- CL-CI — EROSION CONTROL LOG
- CONSTRUCTION PHASE
- WETLAND AREA

NOTES:

1. THE MEASURES SHOWN ARE SUGGESTED PLACEMENTS OF SW3P ITEMS. THE ENGINEER MAY MODIFY AS FIELD CONDITIONS REQUIRE.
2. SW3P LAYOUTS CORRESPOND WITH TCP PHASING.
3. LOCATION OF CONSTRUCTION EXIT/ENTRANCE TO BE DETERMINED IN THE FIELD BY THE ENGINEER.
4. SEDIMENT CONTROL FENCE SHALL BE REPLACED BY CONTRACTOR AS NEEDED IN SUBSEQUENT PHASES OF CONSTRUCTION.
5. STAGING, STORAGE, AND SPOILS LOCATIONS ARE ONLY PERMITTED WITHIN THE CONSTRUCTION AREA.
6. PER TPDES REQUIREMENTS, DISTRIBUTED AREAS ON WHICH CONSTRUCTION ACTIVITIES HAVE CEASED (TEMPORARILY OR PERMANENTLY) SHALL BE STABILIZED WITHIN 14 DAYS UNLESS ACTIVITY RESUMES WITHIN 21 DAYS. SEEDING DOES NOT CONSTITUTE AS STABILIZATION.

DESIGN

INTERIM REVIEW
DOCUMENT INCOMPLETE. NOT INTENDED FOR PERMIT, BIDDING OR CONSTRUCTION.
ENGINEER: TYLER PAYNE DUBE
P.E. SERIAL NO: 118612
DATE: 1/9/2020

APPROVAL

INTERIM REVIEW
DOCUMENT INCOMPLETE. NOT INTENDED FOR PERMIT, BIDDING OR CONSTRUCTION.
ENGINEER: JOHN A. TYLER
P.E. SERIAL NO: 105193
DATE: 1/9/2020

0 10 20 30 60

SCALE: PLAN 1" = 30'

REV. NO.	DATE	DESCRIPTION	BY

PAPE-DAWSON ENGINEERS
SAN ANTONIO | AUSTIN | HOUSTON | FORT WORTH | DALLAS
2000 NW LOOP 410 | SAN ANTONIO, TX 78213 | 210.375.9000
TBPE FIRM REGISTRATION #470 | TBPLS FIRM REGISTRATION #10028800

City of New Braunfels

KLEIN RD PHASE 2

SW3P LAYOUT PHASE 1 STEP 2

SHEET 2 OF 2

DGN:	STATE	PROJECT NO.	ROADWAY
CHK DGN:	TEXAS	NB 18-026	KLEIN RD
DWG:	COUNTY	CITY	SHEET NO.
CHK DWG:	GUADALUPE	NEW BRAUNFELS	250

Plotted on: 1/9/2020

Design Filename: H:\Projects\510\30\03\Design\Civil\SW3P\Phase1\5103003sw3p1A02.dgn

Plotted on: 1/9/2020

Design Filename: H:\Projects\510\30\03\Design\Civil\SW3P\Phase2\5103003sw3p201.dgn

ITEM	DESCRIPTION	UNIT	QTY
0506-6038	TEMP SEDMT CONT FENCE (INSTALL)	LF	88
0506-6039	TEMP SEDMT CONT FENCE (REMOVE)	LF	88
0506-6041	BIODEG EROSN CONT LOGS (INSTL) (12")	LF	31

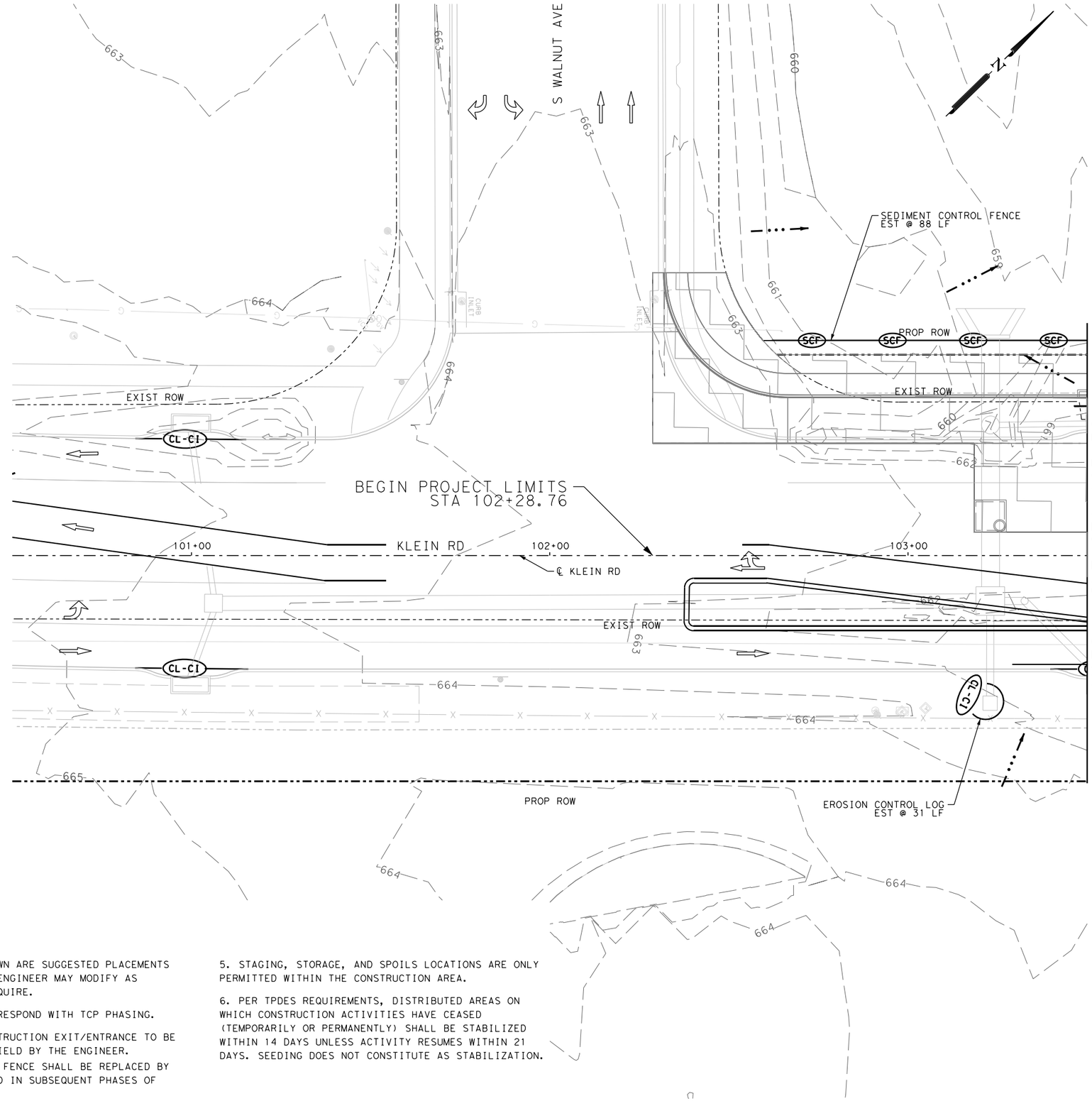

LEGEND

- TRAFFIC FLOW ARROWS
- FLOW ARROW
- SCF — SEDIMENT CONTROL FENCE
- RFD2 — TY 2 ROCK FILTER DAM
- RFD3 — TY 3 ROCK FILTER DAM
- CONSTRUCTION EXIT
- CL-CI — EROSION CONTROL LOG
- CONSTRUCTION PHASE
- WETLAND AREA

NOTES:

1. THE MEASURES SHOWN ARE SUGGESTED PLACEMENTS OF SW3P ITEMS. THE ENGINEER MAY MODIFY AS FIELD CONDITIONS REQUIRE.
2. SW3P LAYOUTS CORRESPOND WITH TCP PHASING.
3. LOCATION OF CONSTRUCTION EXIT/ENTRANCE TO BE DETERMINED IN THE FIELD BY THE ENGINEER.
4. SEDIMENT CONTROL FENCE SHALL BE REPLACED BY CONTRACTOR AS NEEDED IN SUBSEQUENT PHASES OF CONSTRUCTION.
5. STAGING, STORAGE, AND SPOILS LOCATIONS ARE ONLY PERMITTED WITHIN THE CONSTRUCTION AREA.
6. PER TPDES REQUIREMENTS, DISTRIBUTED AREAS ON WHICH CONSTRUCTION ACTIVITIES HAVE CEASED (TEMPORARILY OR PERMANENTLY) SHALL BE STABILIZED WITHIN 14 DAYS UNLESS ACTIVITY RESUMES WITHIN 21 DAYS. SEEDING DOES NOT CONSTITUTE AS STABILIZATION.

DESIGN

INTERIM REVIEW
DOCUMENT INCOMPLETE. NOT INTENDED FOR PERMIT, BIDDING OR CONSTRUCTION.
ENGINEER: TYLER PAYNE DUBE
P.E. SERIAL NO: 118612
DATE: 1/9/2020

APPROVAL

INTERIM REVIEW
DOCUMENT INCOMPLETE. NOT INTENDED FOR PERMIT, BIDDING OR CONSTRUCTION.
ENGINEER: JOHN A. TYLER
P.E. SERIAL NO: 105193
DATE: 1/9/2020

0 10 20 30 60

SCALE: PLAN 1" = 30'

REV. NO.	DATE	DESCRIPTION	BY

PAPE-DAWSON ENGINEERS
SAN ANTONIO | AUSTIN | HOUSTON | FORT WORTH | DALLAS
2000 NW LOOP 410 | SAN ANTONIO, TX 78213 | 210.375.9000
TBPE FIRM REGISTRATION #470 | TBPLS FIRM REGISTRATION #10028800

City of New Braunfels

KLEIN RD PHASE 2

SW3P LAYOUT PHASE 2 STEP 1

SHEET 1 OF 18

DGN:	STATE	PROJECT NO.	ROADWAY
CHK DGN:	TEXAS	NB 18-026	KLEIN RD
DWG:	COUNTY	CITY	SHEET NO.
CHK DWG:	GUADALUPE	NEW BRAUNFELS	251

Plotted on: 1/9/2020

Design Filename: H:\Projects\510\30\03\Design\Civil\SW3P\Phase2\5103003sw3p202.dgn

ITEM	DESCRIPTION	UNIT	QTY
0506-6020	CONSTRUCTION EXITS (INSTALL) (TY 1)	SY	111
0506-6024	CONSTRUCTION EXITS (REMOVE)	SY	111
0506-6038	TEMP SEDMT CONT FENCE (INSTALL)	LF	300
0506-6039	TEMP SEDMT CONT FENCE (REMOVE)	LF	300
0506-6041	BIODEG EROSN CONT LOGS (INSTL) (12")	LF	60
0506-6043	BIODEG EROSN CONT LOGS (REMOVE)	LF	40

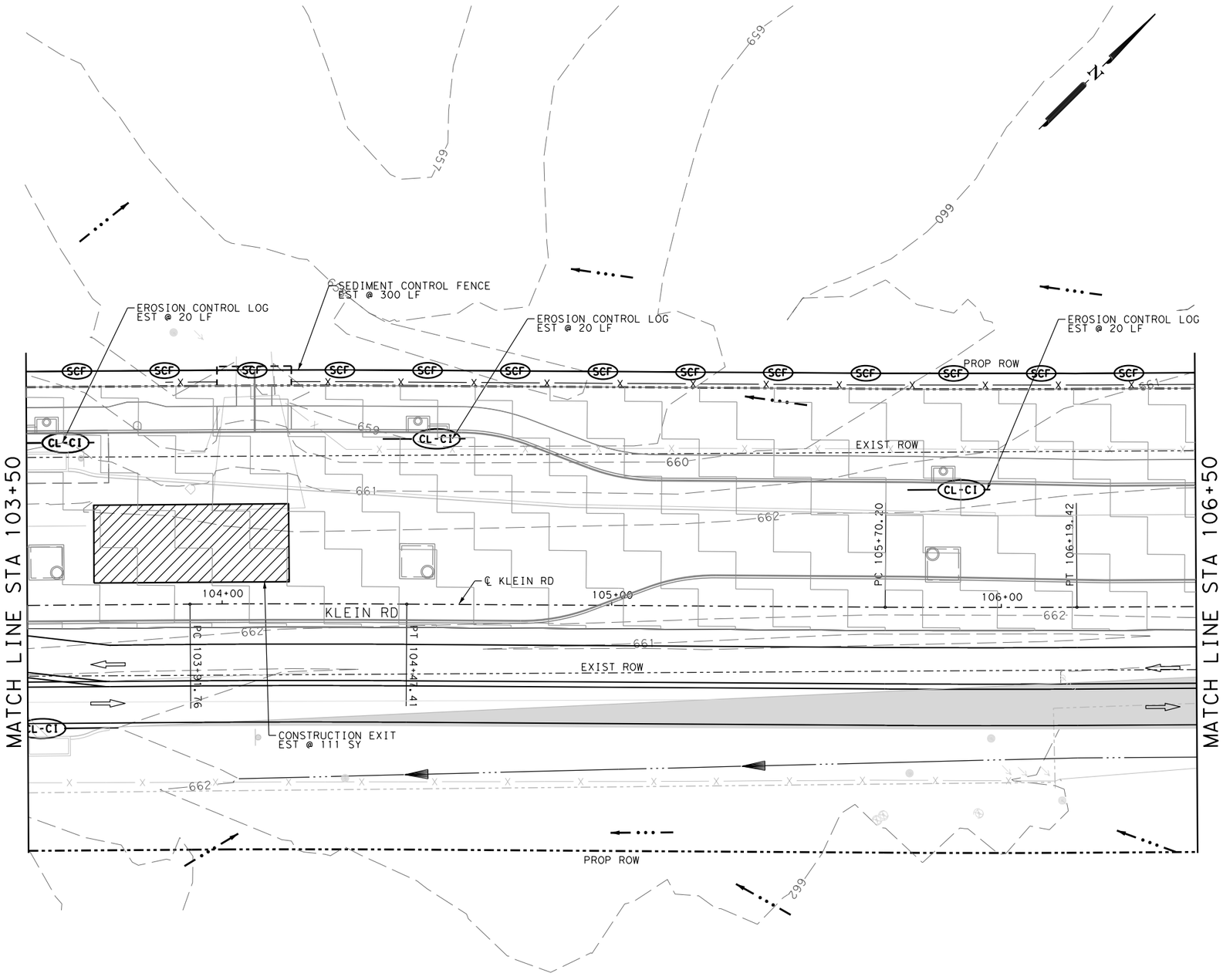

LEGEND

- TRAFFIC FLOW ARROWS
- FLOW ARROW
- SCF — SEDIMENT CONTROL FENCE
- RFD2 — TY 2 ROCK FILTER DAM
- RFD3 — TY 3 ROCK FILTER DAM
- CONSTRUCTION EXIT
- CL-CI — EROSION CONTROL LOG
- CONSTRUCTION PHASE
- WETLAND AREA

NOTES:

1. THE MEASURES SHOWN ARE SUGGESTED PLACEMENTS OF SW3P ITEMS. THE ENGINEER MAY MODIFY AS FIELD CONDITIONS REQUIRE.
2. SW3P LAYOUTS CORRESPOND WITH TCP PHASING.
3. LOCATION OF CONSTRUCTION EXIT/ENTRANCE TO BE DETERMINED IN THE FIELD BY THE ENGINEER.
4. SEDIMENT CONTROL FENCE SHALL BE REPLACED BY CONTRACTOR AS NEEDED IN SUBSEQUENT PHASES OF CONSTRUCTION.
5. STAGING, STORAGE, AND SPOILS LOCATIONS ARE ONLY PERMITTED WITHIN THE CONSTRUCTION AREA.
6. PER TPDES REQUIREMENTS, DISTRIBUTED AREAS ON WHICH CONSTRUCTION ACTIVITIES HAVE CEASED (TEMPORARILY OR PERMANENTLY) SHALL BE STABILIZED WITHIN 14 DAYS UNLESS ACTIVITY RESUMES WITHIN 21 DAYS. SEEDING DOES NOT CONSTITUTE AS STABILIZATION.

DESIGN

INTERIM REVIEW

DOCUMENT INCOMPLETE. NOT INTENDED FOR PERMIT, BIDDING OR CONSTRUCTION.
ENGINEER: TYLER PAYNE DUBE
P.E. SERIAL NO: 118612
DATE: 1/9/2020

APPROVAL

INTERIM REVIEW

DOCUMENT INCOMPLETE. NOT INTENDED FOR PERMIT, BIDDING OR CONSTRUCTION.
ENGINEER: JOHN A. TYLER
P.E. SERIAL NO: 105193
DATE: 1/9/2020

0 10 20 30 60

SCALE: PLAN 1"= 30'

REV. NO.	DATE	DESCRIPTION	BY

PAPE-DAWSON ENGINEERS
SAN ANTONIO | AUSTIN | HOUSTON | FORT WORTH | DALLAS
2000 NW LOOP 410 | SAN ANTONIO, TX 78213 | 210.375.9000
TBPE FIRM REGISTRATION #470 | TBPLS FIRM REGISTRATION #10028800

City of New Braunfels

KLEIN RD PHASE 2

SW3P LAYOUT PHASE 2 STEP 1

SHEET 2 OF 18

DGN:	STATE	PROJECT NO.	ROADWAY
CHK DGN:	TEXAS	NB 18-026	KLEIN RD
DWG:	COUNTY	CITY	SHEET NO.
CHK DWG:	GUADALUPE	NEW BRAUNFELS	252

Plotted on: 1/9/2020

Design Filename: H:\Projects\510\30\03\Design\Civil\SW3P\Phase2\5103003sw3p203.dgn

ITEM	DESCRIPTION	UNIT	QTY
0506-6002	ROCK FILTER DAMS (INSTALL) (TY 2)	LF	10
0506-6011	ROCK FILTER DAMS (REMOVE)	LF	10
0506-6038	TEMP SEDMT CONT FENCE (INSTALL)	LF	50
0506-6039	TEMP SEDMT CONT FENCE (REMOVE)	LF	50

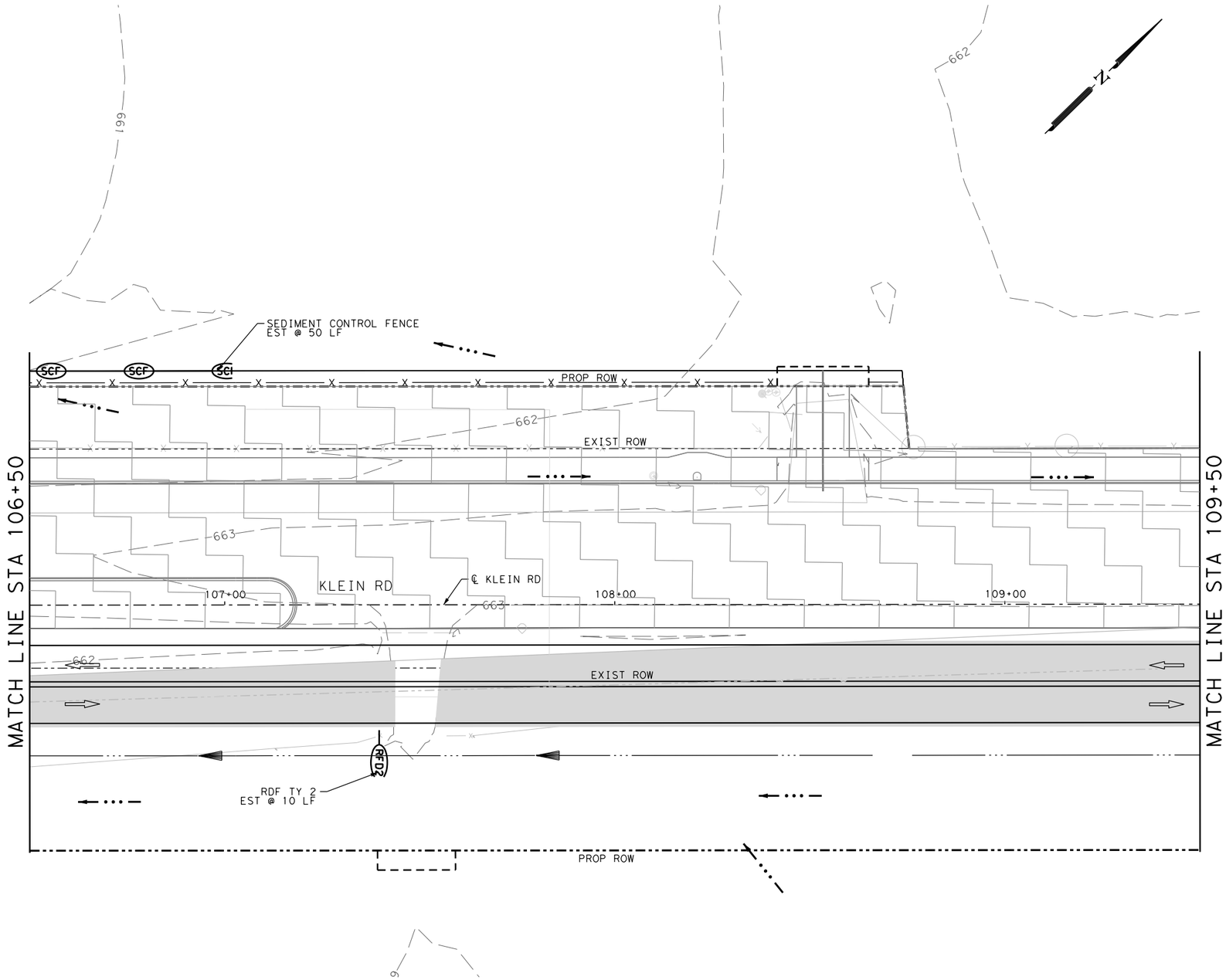

LEGEND

- TRAFFIC FLOW ARROWS
- FLOW ARROW
- SCF — SEDIMENT CONTROL FENCE
- RFD2 — TY 2 ROCK FILTER DAM
- RFD3 — TY 3 ROCK FILTER DAM
- CONSTRUCTION EXIT
- CL-CI — EROSION CONTROL LOG
- CONSTRUCTION PHASE
- WETLAND AREA

DESIGN

INTERIM REVIEW

DOCUMENT INCOMPLETE. NOT INTENDED FOR PERMIT, BIDDING OR CONSTRUCTION.
ENGINEER: TYLER PAYNE DUBE
P.E. SERIAL NO: 118612
DATE: 1/9/2020

APPROVAL

INTERIM REVIEW

DOCUMENT INCOMPLETE. NOT INTENDED FOR PERMIT, BIDDING OR CONSTRUCTION.
ENGINEER: JOHN A. TYLER
P.E. SERIAL NO: 105193
DATE: 1/9/2020

0 10 20 30 60

SCALE: PLAN 1"= 30'

REV. NO.	DATE	DESCRIPTION	BY

PAPE-DAWSON ENGINEERS
SAN ANTONIO | AUSTIN | HOUSTON | FORT WORTH | DALLAS
2000 NW LOOP 410 | SAN ANTONIO, TX 78213 | 210.375.9000
TBPE FIRM REGISTRATION #470 | TBPLS FIRM REGISTRATION #10028800

City of New Braunfels

KLEIN RD PHASE 2

SW3P LAYOUT PHASE 2 STEP 1

SHEET 3 OF 18

DGN:	STATE	PROJECT NO.	ROADWAY
CHK DGN:	TEXAS	NB 18-026	KLEIN RD
DWG:	COUNTY	CITY	SHEET NO.
CHK DWG:	GUADALUPE	NEW BRAUNFELS	253

NOTES:

1. THE MEASURES SHOWN ARE SUGGESTED PLACEMENTS OF SW3P ITEMS. THE ENGINEER MAY MODIFY AS FIELD CONDITIONS REQUIRE.
2. SW3P LAYOUTS CORRESPOND WITH TCP PHASING.
3. LOCATION OF CONSTRUCTION EXIT/ENTRANCE TO BE DETERMINED IN THE FIELD BY THE ENGINEER.
4. SEDIMENT CONTROL FENCE SHALL BE REPLACED BY CONTRACTOR AS NEEDED IN SUBSEQUENT PHASES OF CONSTRUCTION.
5. STAGING, STORAGE, AND SPOILS LOCATIONS ARE ONLY PERMITTED WITHIN THE CONSTRUCTION AREA.
6. PER TPDES REQUIREMENTS, DISTRIBUTED AREAS ON WHICH CONSTRUCTION ACTIVITIES HAVE CEASED (TEMPORARILY OR PERMANENTLY) SHALL BE STABILIZED WITHIN 14 DAYS UNLESS ACTIVITY RESUMES WITHIN 21 DAYS. SEEDING DOES NOT CONSTITUTE AS STABILIZATION.

ITEM	DESCRIPTION	UNIT	QTY
0506-6002	ROCK FILTER DAMS (INSTALL) (TY 2)	LF	10
0506-6011	ROCK FILTER DAMS (REMOVE)	LF	10
0506-6041	BIODEG EROSN CONT LOGS (INSTL) (12")	LF	20
0506-6043	BIODEG EROSN CONT LOGS (REMOVE)	LF	20

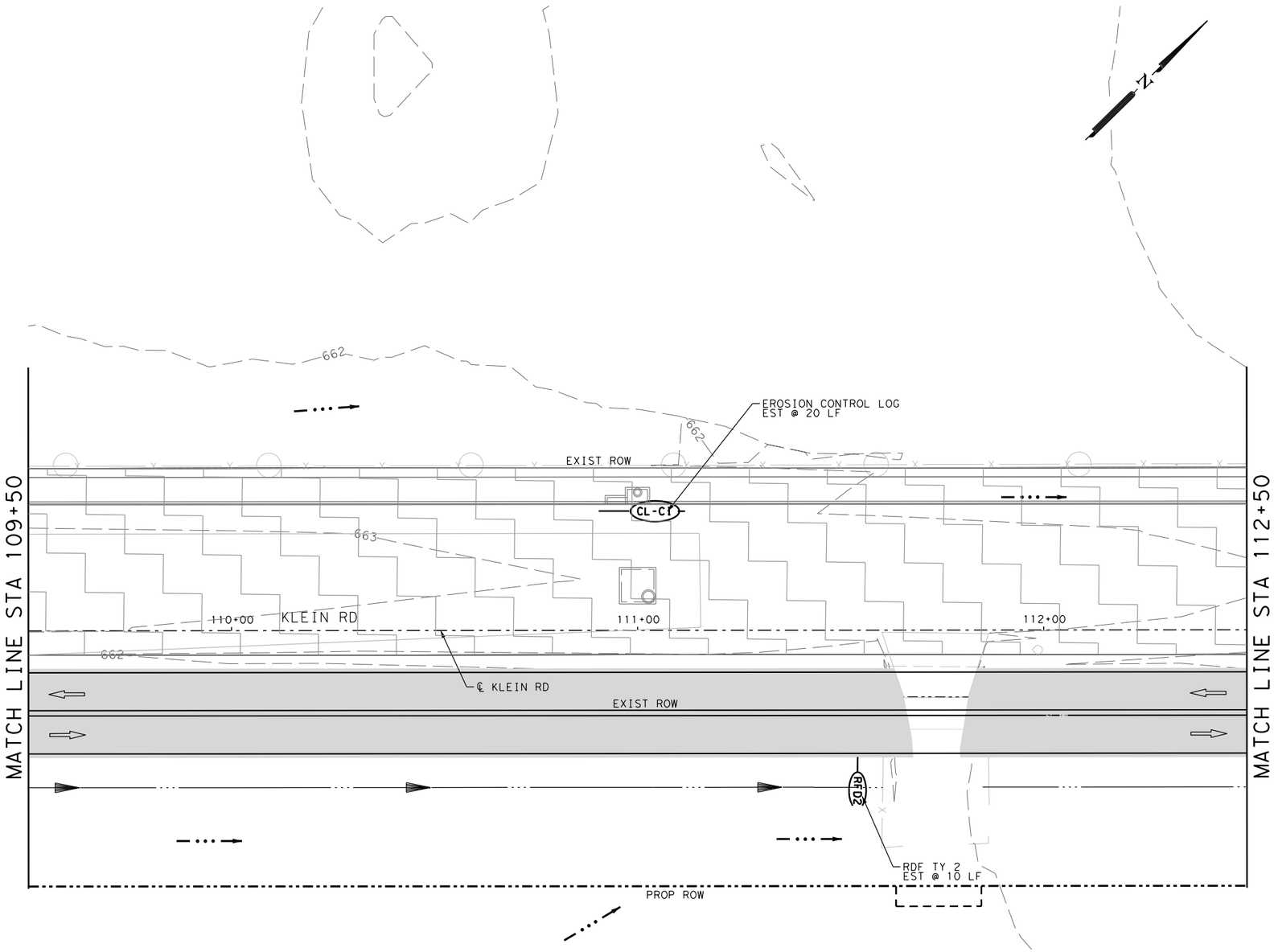

LEGEND

- TRAFFIC FLOW ARROWS
- FLOW ARROW
- SCF — SEDIMENT CONTROL FENCE
- RFD2 — TY 2 ROCK FILTER DAM
- RFD3 — TY 3 ROCK FILTER DAM
- CONSTRUCTION EXIT
- CL-CI — EROSION CONTROL LOG
- CONSTRUCTION PHASE
- WETLAND AREA

DESIGN

INTERIM REVIEW

DOCUMENT INCOMPLETE. NOT INTENDED FOR PERMIT, BIDDING OR CONSTRUCTION.
ENGINEER: TYLER PAYNE DUBE
P.E. SERIAL NO: 118612
DATE: 1/9/2020

APPROVAL

INTERIM REVIEW

DOCUMENT INCOMPLETE. NOT INTENDED FOR PERMIT, BIDDING OR CONSTRUCTION.
ENGINEER: JOHN A. TYLER
P.E. SERIAL NO: 105193
DATE: 1/9/2020

0 10 20 30 60

SCALE: PLAN 1"= 30'

REV. NO.	DATE	DESCRIPTION	BY

PAPE-DAWSON ENGINEERS
SAN ANTONIO | AUSTIN | HOUSTON | FORT WORTH | DALLAS
2000 NW LOOP 410 | SAN ANTONIO, TX 78213 | 210.375.9000
TBPE FIRM REGISTRATION #470 | TBPLS FIRM REGISTRATION #10028800

City of New Braunfels

KLEIN RD PHASE 2

SW3P LAYOUT PHASE 2 STEP 1

SHEET 4 OF 18

DGN:	STATE	PROJECT NO.	ROADWAY
CHK DGN:	TEXAS	NB 18-026	KLEIN RD
DWG:	COUNTY	CITY	SHEET NO.
CHK DWG:	GUADALUPE	NEW BRAUNFELS	254

NOTES:

1. THE MEASURES SHOWN ARE SUGGESTED PLACEMENTS OF SW3P ITEMS. THE ENGINEER MAY MODIFY AS FIELD CONDITIONS REQUIRE.
2. SW3P LAYOUTS CORRESPOND WITH TCP PHASING.
3. LOCATION OF CONSTRUCTION EXIT/ENTRANCE TO BE DETERMINED IN THE FIELD BY THE ENGINEER.
4. SEDIMENT CONTROL FENCE SHALL BE REPLACED BY CONTRACTOR AS NEEDED IN SUBSEQUENT PHASES OF CONSTRUCTION.
5. STAGING, STORAGE, AND SPOILS LOCATIONS ARE ONLY PERMITTED WITHIN THE CONSTRUCTION AREA.
6. PER TPDES REQUIREMENTS, DISTRIBUTED AREAS ON WHICH CONSTRUCTION ACTIVITIES HAVE CEASED (TEMPORARILY OR PERMANENTLY) SHALL BE STABILIZED WITHIN 14 DAYS UNLESS ACTIVITY RESUMES WITHIN 21 DAYS. SEEDING DOES NOT CONSTITUTE AS STABILIZATION.

Plotted on: 1/9/2020

Design Filename: H:\Projects\510\30\03\Design\Civil\SW3P\Phase2\5103003sw3p204.dgn

ITEM	DESCRIPTION	UNIT	QTY
0506-6002	ROCK FILTER DAMS (INSTALL) (TY 2)	LF	20
0506-6011	ROCK FILTER DAMS (REMOVE)	LF	20
0506-6020	CONSTRUCTION EXITS (INSTALL) (TY 1)	SY	156
0506-6024	CONSTRUCTION EXITS (REMOVE)	SY	156
0506-6041	BIODEG EROSN CONT LOGS (INSTL) (12")	LF	20
0506-6043	BIODEG EROSN CONT LOGS (REMOVE)	LF	20

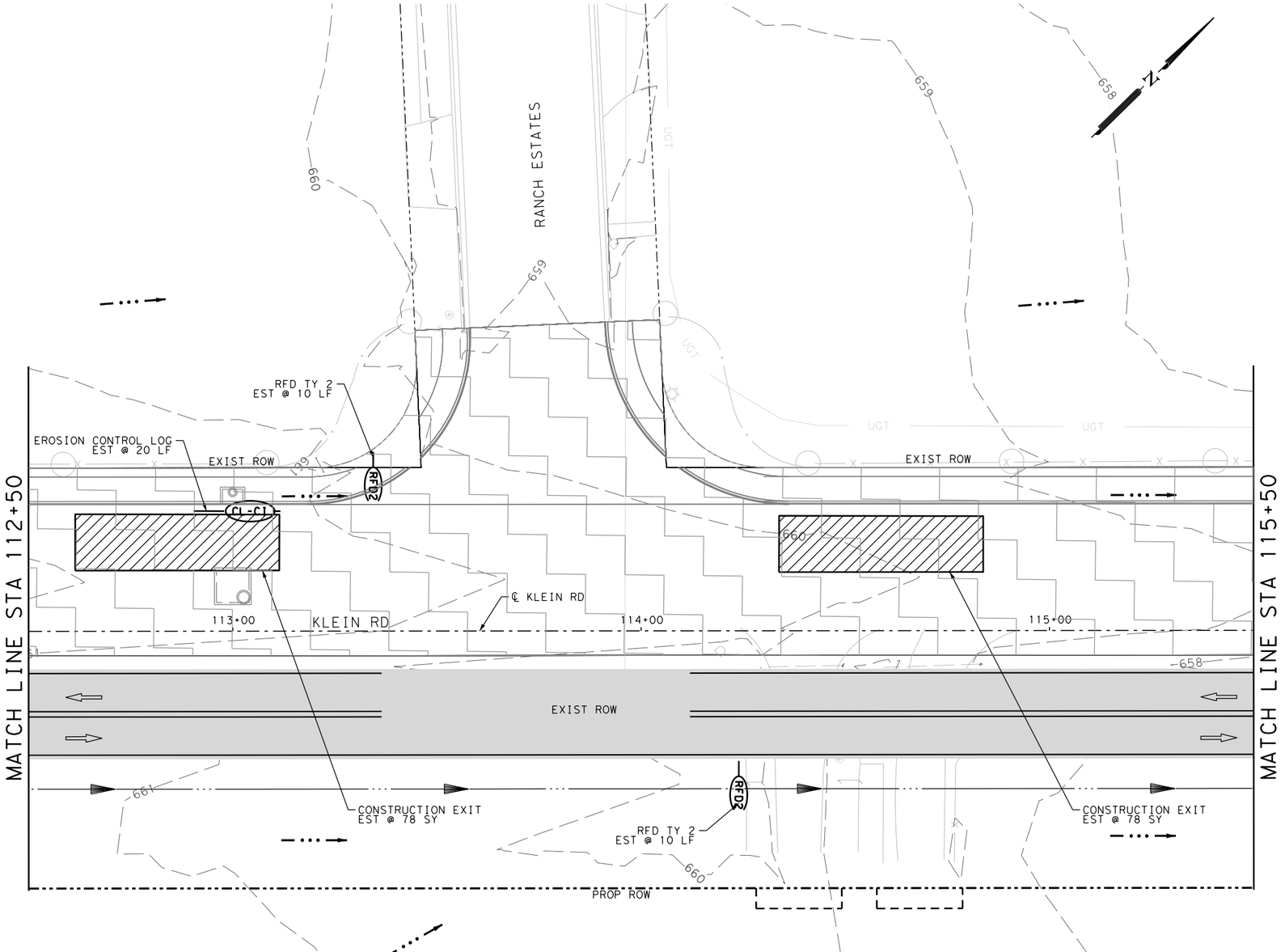

LEGEND

- TRAFFIC FLOW ARROWS
- FLOW ARROW
- SCF — SEDIMENT CONTROL FENCE
- RFD2 — TY 2 ROCK FILTER DAM
- RFD3 — TY 3 ROCK FILTER DAM
- CONSTRUCTION EXIT
- CL-C1 — EROSION CONTROL LOG
- CONSTRUCTION PHASE
- WETLAND AREA

DESIGN

INTERIM REVIEW

DOCUMENT INCOMPLETE. NOT INTENDED FOR PERMIT, BIDDING OR CONSTRUCTION.
ENGINEER: TYLER PAYNE DUBE
P.E. SERIAL NO: 118612
DATE: 1/9/2020

APPROVAL

INTERIM REVIEW

DOCUMENT INCOMPLETE. NOT INTENDED FOR PERMIT, BIDDING OR CONSTRUCTION.
ENGINEER: JOHN A. TYLER
P.E. SERIAL NO: 105193
DATE: 1/9/2020

0 10 20 30 60

SCALE: PLAN 1"= 30'

REV. NO.	DATE	DESCRIPTION	BY

PAPE-DAWSON ENGINEERS
SAN ANTONIO | AUSTIN | HOUSTON | FORT WORTH | DALLAS
2000 NW LOOP 410 | SAN ANTONIO, TX 78213 | 210.375.9000
TBPE FIRM REGISTRATION #470 | TBPLS FIRM REGISTRATION #10028800

City of New Braunfels

KLEIN RD PHASE 2

SW3P LAYOUT PHASE 2 STEP 1

SHEET 5 OF 18

DGN:	STATE	PROJECT NO.	ROADWAY
CHK DGN:	TEXAS	NB 18-026	KLEIN RD
DWG:	COUNTY	CITY	SHEET NO.
CHK DWG:	GUADALUPE	NEW BRAUNFELS	255

NOTES:

1. THE MEASURES SHOWN ARE SUGGESTED PLACEMENTS OF SW3P ITEMS. THE ENGINEER MAY MODIFY AS FIELD CONDITIONS REQUIRE.
2. SW3P LAYOUTS CORRESPOND WITH TCP PHASING.
3. LOCATION OF CONSTRUCTION EXIT/ENTRANCE TO BE DETERMINED IN THE FIELD BY THE ENGINEER.
4. SEDIMENT CONTROL FENCE SHALL BE REPLACED BY CONTRACTOR AS NEEDED IN SUBSEQUENT PHASES OF CONSTRUCTION.
5. STAGING, STORAGE, AND SPOILS LOCATIONS ARE ONLY PERMITTED WITHIN THE CONSTRUCTION AREA.
6. PER TPDES REQUIREMENTS, DISTRIBUTED AREAS ON WHICH CONSTRUCTION ACTIVITIES HAVE CEASED (TEMPORARILY OR PERMANENTLY) SHALL BE STABILIZED WITHIN 14 DAYS UNLESS ACTIVITY RESUMES WITHIN 21 DAYS. SEEDING DOES NOT CONSTITUTE AS STABILIZATION.

Plotted on: 1/9/2020

Design Filename: H:\Projects\510\30\03\Design\Civil\SW3P\Phase2\5103003sw3p205.dgn

ITEM	DESCRIPTION	UNIT	QTY
0506-6002	ROCK FILTER DAMS (INSTALL) (TY 2)	LF	10
0506-6011	ROCK FILTER DAMS (REMOVE)	LF	10
0506-6041	BIODEG EROSN CONT LOGS (INSTL) (12")	LF	20
0506-6043	BIODEG EROSN CONT LOGS (REMOVE)	LF	20

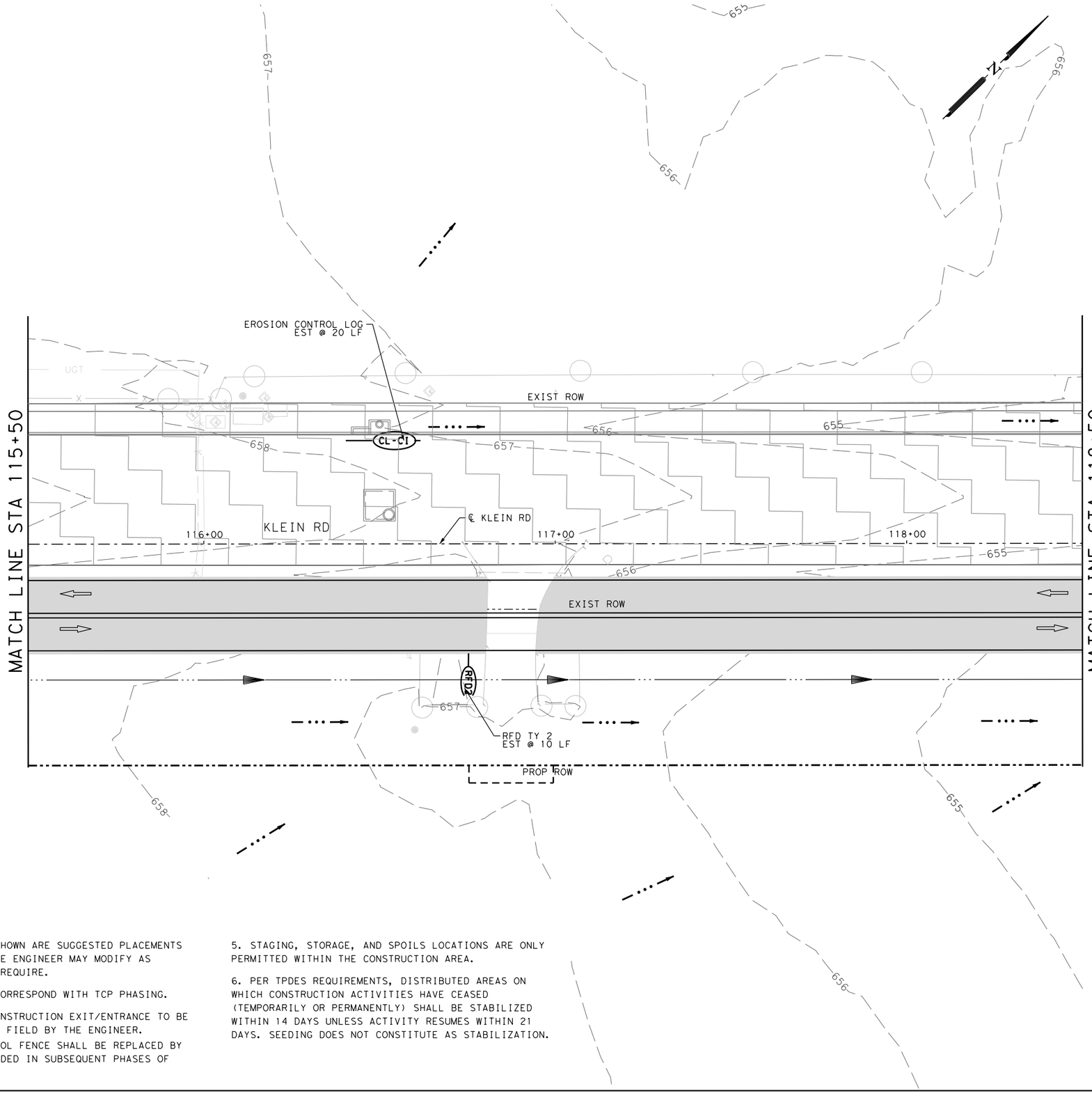

LEGEND

- TRAFFIC FLOW ARROWS
- FLOW ARROW
- SCF — SEDIMENT CONTROL FENCE
- RFD2 — TY 2 ROCK FILTER DAM
- RFD3 — TY 3 ROCK FILTER DAM
- CONSTRUCTION EXIT
- CL-CI — EROSION CONTROL LOG
- CONSTRUCTION PHASE
- WETLAND AREA

DESIGN

INTERIM REVIEW
DOCUMENT INCOMPLETE. NOT INTENDED FOR PERMIT, BIDDING OR CONSTRUCTION.
ENGINEER: TYLER PAYNE DUBE
P.E. SERIAL NO: 118612
DATE: 1/9/2020

APPROVAL

INTERIM REVIEW
DOCUMENT INCOMPLETE. NOT INTENDED FOR PERMIT, BIDDING OR CONSTRUCTION.
ENGINEER: JOHN A. TYLER
P.E. SERIAL NO: 105193
DATE: 1/9/2020

0 10 20 30 60

SCALE: PLAN 1"= 30'

REV. NO.	DATE	DESCRIPTION	BY

NOTES:

1. THE MEASURES SHOWN ARE SUGGESTED PLACEMENTS OF SW3P ITEMS. THE ENGINEER MAY MODIFY AS FIELD CONDITIONS REQUIRE.
2. SW3P LAYOUTS CORRESPOND WITH TCP PHASING.
3. LOCATION OF CONSTRUCTION EXIT/ENTRANCE TO BE DETERMINED IN THE FIELD BY THE ENGINEER.
4. SEDIMENT CONTROL FENCE SHALL BE REPLACED BY CONTRACTOR AS NEEDED IN SUBSEQUENT PHASES OF CONSTRUCTION.
5. STAGING, STORAGE, AND SPOILS LOCATIONS ARE ONLY PERMITTED WITHIN THE CONSTRUCTION AREA.
6. PER TPDES REQUIREMENTS, DISTRIBUTED AREAS ON WHICH CONSTRUCTION ACTIVITIES HAVE CEASED (TEMPORARILY OR PERMANENTLY) SHALL BE STABILIZED WITHIN 14 DAYS UNLESS ACTIVITY RESUMES WITHIN 21 DAYS. SEEDING DOES NOT CONSTITUTE AS STABILIZATION.

PAPE-DAWSON ENGINEERS
SAN ANTONIO | AUSTIN | HOUSTON | FORT WORTH | DALLAS
2000 NW LOOP 410 | SAN ANTONIO, TX 78213 | 210.375.9000
TBPE FIRM REGISTRATION #470 | TBPLS FIRM REGISTRATION #10028800

City of New Braunfels

KLEIN RD PHASE 2

SW3P LAYOUT PHASE 2 STEP 1

SHEET 6 OF 18

DGN:	STATE	PROJECT NO.	ROADWAY
CHK DGN:	TEXAS	NB 18-026	KLEIN RD
DWG:	COUNTY	CITY	SHEET NO.
CHK DWG:	GUADALUPE	NEW BRAUNFELS	256

Plotted on: 1/9/2020
Design Filename: H:\Projects\510\30\03\Design\Civil\SW3P\Phase2\5103003sw3p206.dgn

Plotted on: 1/9/2020

Design Filename: H:\Projects\510\30\03\Design\Civil\SW3P\Phase2\5103003sw3p207.dgn

ITEM	DESCRIPTION	UNIT	QTY
0506-6002	ROCK FILTER DAMS (INSTALL) (TY 2)	LF	10
0506-6011	ROCK FILTER DAMS (REMOVE)	LF	10
0506-6020	CONSTRUCTION EXITS (INSTALL) (TY 1)	SY	156
0506-6024	CONSTRUCTION EXITS (REMOVE)	SY	156
0506-6041	BIODEG EROSN CONT LOGS (INSTL) (12")	LF	20
0506-6043	BIODEG EROSN CONT LOGS (REMOVE)	LF	20

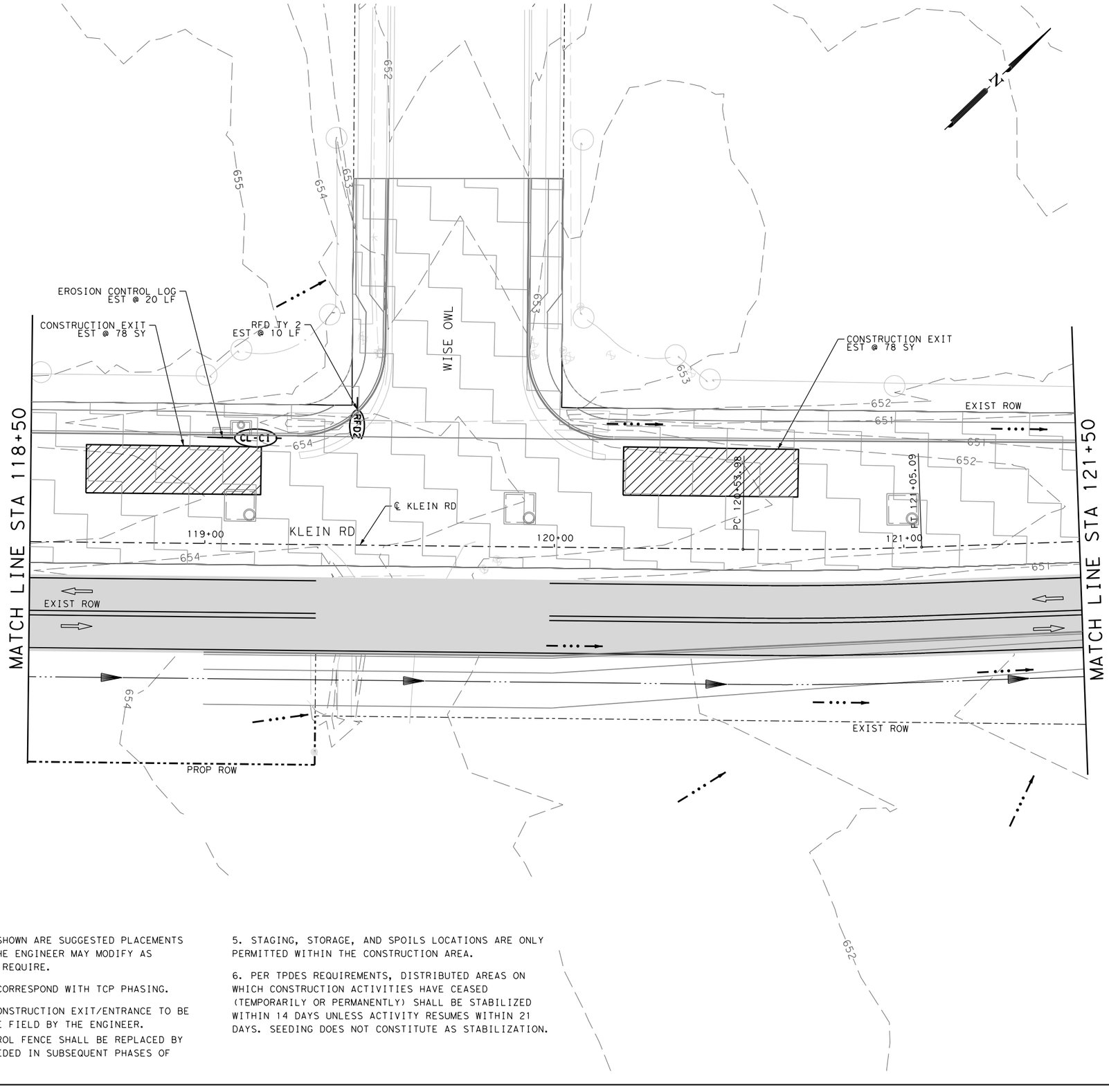

LEGEND

- TRAFFIC FLOW ARROWS
- FLOW ARROW
- SCF — SEDIMENT CONTROL FENCE
- RFD2 — TY 2 ROCK FILTER DAM
- RFD3 — TY 3 ROCK FILTER DAM
- CONSTRUCTION EXIT
- CL-C1 — EROSION CONTROL LOG
- CONSTRUCTION PHASE
- WETLAND AREA

DESIGN

INTERIM REVIEW

DOCUMENT INCOMPLETE. NOT INTENDED FOR PERMIT, BIDDING OR CONSTRUCTION.
ENGINEER: TYLER PAYNE DUBE
P.E. SERIAL NO: 118612
DATE: 1/9/2020

APPROVAL

INTERIM REVIEW

DOCUMENT INCOMPLETE. NOT INTENDED FOR PERMIT, BIDDING OR CONSTRUCTION.
ENGINEER: JOHN A. TYLER
P.E. SERIAL NO: 105193
DATE: 1/9/2020

0 10 20 30 60

SCALE: PLAN 1"= 30'

REV. NO.	DATE	DESCRIPTION	BY

PAPE-DAWSON ENGINEERS
SAN ANTONIO | AUSTIN | HOUSTON | FORT WORTH | DALLAS
2000 NW LOOP 410 | SAN ANTONIO, TX 78213 | 210.375.9000
TBPE FIRM REGISTRATION #470 | TBPLS FIRM REGISTRATION #10028800

City of New Braunfels

KLEIN RD PHASE 2

SW3P LAYOUT PHASE 2 STEP 1

SHEET 7 OF 18

DGN:	STATE	PROJECT NO.	ROADWAY
CHK DGN:	TEXAS	NB 18-026	KLEIN RD
DWG:	COUNTY	CITY	SHEET NO.
CHK DWG:	GUADALUPE	NEW BRAUNFELS	257

NOTES:

1. THE MEASURES SHOWN ARE SUGGESTED PLACEMENTS OF SW3P ITEMS. THE ENGINEER MAY MODIFY AS FIELD CONDITIONS REQUIRE.
2. SW3P LAYOUTS CORRESPOND WITH TCP PHASING.
3. LOCATION OF CONSTRUCTION EXIT/ENTRANCE TO BE DETERMINED IN THE FIELD BY THE ENGINEER.
4. SEDIMENT CONTROL FENCE SHALL BE REPLACED BY CONTRACTOR AS NEEDED IN SUBSEQUENT PHASES OF CONSTRUCTION.
5. STAGING, STORAGE, AND SPOILS LOCATIONS ARE ONLY PERMITTED WITHIN THE CONSTRUCTION AREA.
6. PER TPDES REQUIREMENTS, DISTRIBUTED AREAS ON WHICH CONSTRUCTION ACTIVITIES HAVE CEASED (TEMPORARILY OR PERMANENTLY) SHALL BE STABILIZED WITHIN 14 DAYS UNLESS ACTIVITY RESUMES WITHIN 21 DAYS. SEEDING DOES NOT CONSTITUTE AS STABILIZATION.

ITEM	DESCRIPTION	UNIT	QTY
0506-6002	ROCK FILTER DAMS (INSTALL) (TY 2)	LF	10
0506-6011	ROCK FILTER DAMS (REMOVE)	LF	10
0506-6020	CONSTRUCTION EXITS (INSTALL) (TY 1)	SY	78
0506-6024	CONSTRUCTION EXITS (REMOVE)	SY	78
0506-6041	BIODEG EROSN CONT LOGS (INSTL) (12")	LF	20
0506-6043	BIODEG EROSN CONT LOGS (REMOVE)	LF	20

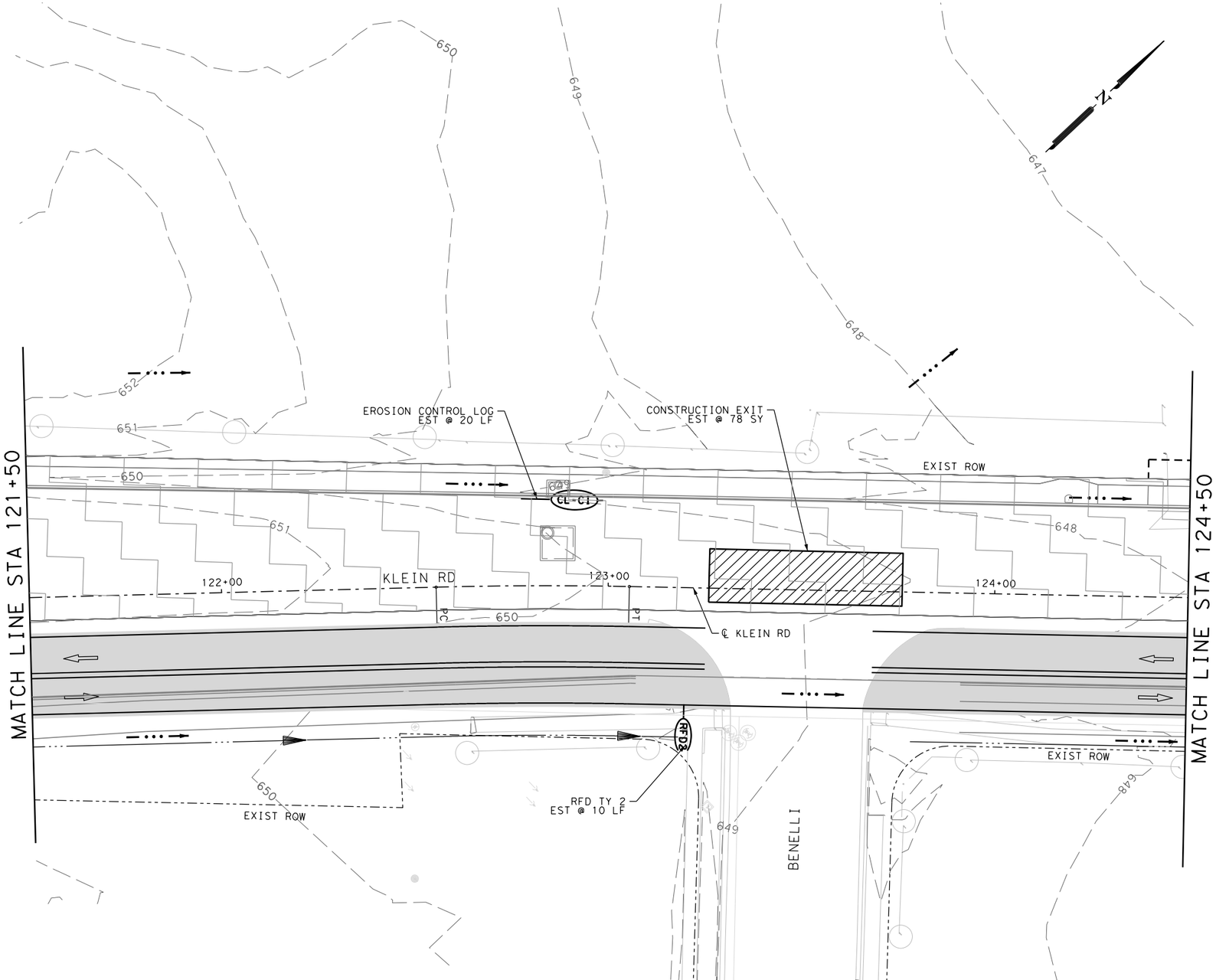

LEGEND

- TRAFFIC FLOW ARROWS
- FLOW ARROW
- SCF — SEDIMENT CONTROL FENCE
- RFD2 — TY 2 ROCK FILTER DAM
- RFD3 — TY 3 ROCK FILTER DAM
- CONSTRUCTION EXIT
- CL-C1 — EROSION CONTROL LOG
- CONSTRUCTION PHASE
- WETLAND AREA

NOTES:

1. THE MEASURES SHOWN ARE SUGGESTED PLACEMENTS OF SW3P ITEMS. THE ENGINEER MAY MODIFY AS FIELD CONDITIONS REQUIRE.
2. SW3P LAYOUTS CORRESPOND WITH TCP PHASING.
3. LOCATION OF CONSTRUCTION EXIT/ENTRANCE TO BE DETERMINED IN THE FIELD BY THE ENGINEER.
4. SEDIMENT CONTROL FENCE SHALL BE REPLACED BY CONTRACTOR AS NEEDED IN SUBSEQUENT PHASES OF CONSTRUCTION.
5. STAGING, STORAGE, AND SPOILS LOCATIONS ARE ONLY PERMITTED WITHIN THE CONSTRUCTION AREA.
6. PER TPDES REQUIREMENTS, DISTRIBUTED AREAS ON WHICH CONSTRUCTION ACTIVITIES HAVE CEASED (TEMPORARILY OR PERMANENTLY) SHALL BE STABILIZED WITHIN 14 DAYS UNLESS ACTIVITY RESUMES WITHIN 21 DAYS. SEEDING DOES NOT CONSTITUTE AS STABILIZATION.

DESIGN

INTERIM REVIEW
DOCUMENT INCOMPLETE. NOT INTENDED FOR PERMIT, BIDDING OR CONSTRUCTION.
ENGINEER: TYLER PAYNE DUBE
P.E. SERIAL NO: 118612
DATE: 1/9/2020

APPROVAL

INTERIM REVIEW
DOCUMENT INCOMPLETE. NOT INTENDED FOR PERMIT, BIDDING OR CONSTRUCTION.
ENGINEER: JOHN A. TYLER
P.E. SERIAL NO: 105193
DATE: 1/9/2020

0 10 20 30 60

SCALE: PLAN 1"= 30'

REV. NO.	DATE	DESCRIPTION	BY

PAPE-DAWSON ENGINEERS
SAN ANTONIO | AUSTIN | HOUSTON | FORT WORTH | DALLAS
2000 NW LOOP 410 | SAN ANTONIO, TX 78213 | 210.375.9000
TBPE FIRM REGISTRATION #470 | TBPLS FIRM REGISTRATION #10028800

City of New Braunfels

KLEIN RD PHASE 2

SW3P LAYOUT PHASE 2 STEP 1

SHEET 8 OF 18

DGN:	STATE	PROJECT NO.	ROADWAY
CHK DGN:	TEXAS	NB 18-026	KLEIN RD
DWG:	COUNTY	CITY	SHEET NO.
CHK DWG:	GUADALUPE	NEW BRAUNFELS	258

Plotted on: 1/9/2020

Design Filename: H:\Projects\510\30\03\Design\Civil\SW3P\Phase2\5103003sw3p208.dgn

Plotted on: 1/9/2020

Design Filename: H:\Projects\510\30\03\Design\Civil\SW3P\Phase2\5103003sw3p209.dgn

ITEM	DESCRIPTION	UNIT	QTY
0506-6002	ROCK FILTER DAMS (INSTALL) (TY 2)	LF	20
0506-6011	ROCK FILTER DAMS (REMOVE)	LF	20
0506-6020	CONSTRUCTION EXITS (INSTALL) (TY 1)	SY	78
0506-6024	CONSTRUCTION EXITS (REMOVE)	SY	78
0506-6041	BIODEG EROSN CONT LOGS (INSTL) (12")	LF	20
0506-6043	BIODEG EROSN CONT LOGS (REMOVE)	LF	20

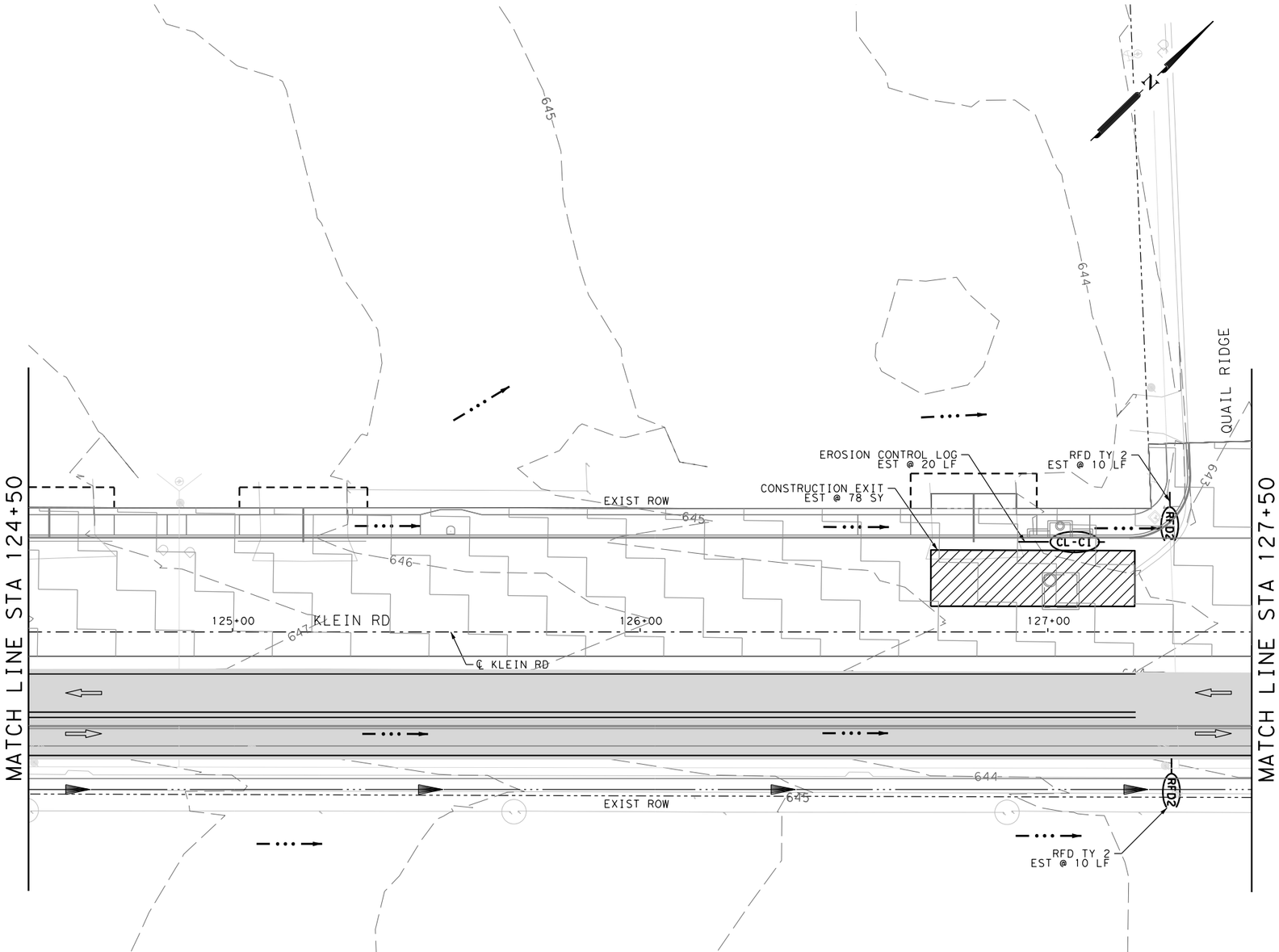

LEGEND

- TRAFFIC FLOW ARROWS
- FLOW ARROW
- SCF — SEDIMENT CONTROL FENCE
- RFD2 — TY 2 ROCK FILTER DAM
- RFD3 — TY 3 ROCK FILTER DAM
- CONSTRUCTION EXIT
- CL-C1 — EROSION CONTROL LOG
- CONSTRUCTION PHASE
- WETLAND AREA

NOTES:

1. THE MEASURES SHOWN ARE SUGGESTED PLACEMENTS OF SW3P ITEMS. THE ENGINEER MAY MODIFY AS FIELD CONDITIONS REQUIRE.
2. SW3P LAYOUTS CORRESPOND WITH TCP PHASING.
3. LOCATION OF CONSTRUCTION EXIT/ENTRANCE TO BE DETERMINED IN THE FIELD BY THE ENGINEER.
4. SEDIMENT CONTROL FENCE SHALL BE REPLACED BY CONTRACTOR AS NEEDED IN SUBSEQUENT PHASES OF CONSTRUCTION.
5. STAGING, STORAGE, AND SPOILS LOCATIONS ARE ONLY PERMITTED WITHIN THE CONSTRUCTION AREA.
6. PER TPDES REQUIREMENTS, DISTRIBUTED AREAS ON WHICH CONSTRUCTION ACTIVITIES HAVE CEASED (TEMPORARILY OR PERMANENTLY) SHALL BE STABILIZED WITHIN 14 DAYS UNLESS ACTIVITY RESUMES WITHIN 21 DAYS. SEEDING DOES NOT CONSTITUTE AS STABILIZATION.

DESIGN

INTERIM REVIEW
DOCUMENT INCOMPLETE. NOT INTENDED FOR PERMIT, BIDDING OR CONSTRUCTION.
ENGINEER: TYLER PAYNE DUBE
P.E. SERIAL NO: 118612
DATE: 1/9/2020

APPROVAL

INTERIM REVIEW
DOCUMENT INCOMPLETE. NOT INTENDED FOR PERMIT, BIDDING OR CONSTRUCTION.
ENGINEER: JOHN A. TYLER
P.E. SERIAL NO: 105193
DATE: 1/9/2020

0 10 20 30 60

SCALE: PLAN 1"= 30'

REV. NO.	DATE	DESCRIPTION	BY

PAPE-DAWSON ENGINEERS
SAN ANTONIO | AUSTIN | HOUSTON | FORT WORTH | DALLAS
2000 NW LOOP 410 | SAN ANTONIO, TX 78213 | 210.375.9000
TBPE FIRM REGISTRATION #470 | TBPLS FIRM REGISTRATION #10028800

City of New Braunfels

KLEIN RD PHASE 2

SW3P LAYOUT PHASE 2 STEP 1

SHEET 9 OF 18

DGN:	STATE	PROJECT NO.	ROADWAY
CHK DGN:	TEXAS	NB 18-026	KLEIN RD
DWG:	COUNTY	CITY	SHEET NO.
CHK DWG:	GUADALUPE	NEW BRAUNFELS	259

ITEM	DESCRIPTION	UNIT	QTY
0506-6020	CONSTRUCTION EXITS (INSTALL) (TY 1)	SY	78
0506-6024	CONSTRUCTION EXITS (REMOVE)	SY	78
0506-6041	BIODEG EROSN CONT LOGS (INSTL) (12")	LF	20
0506-6043	BIODEG EROSN CONT LOGS (REMOVE)	LF	20

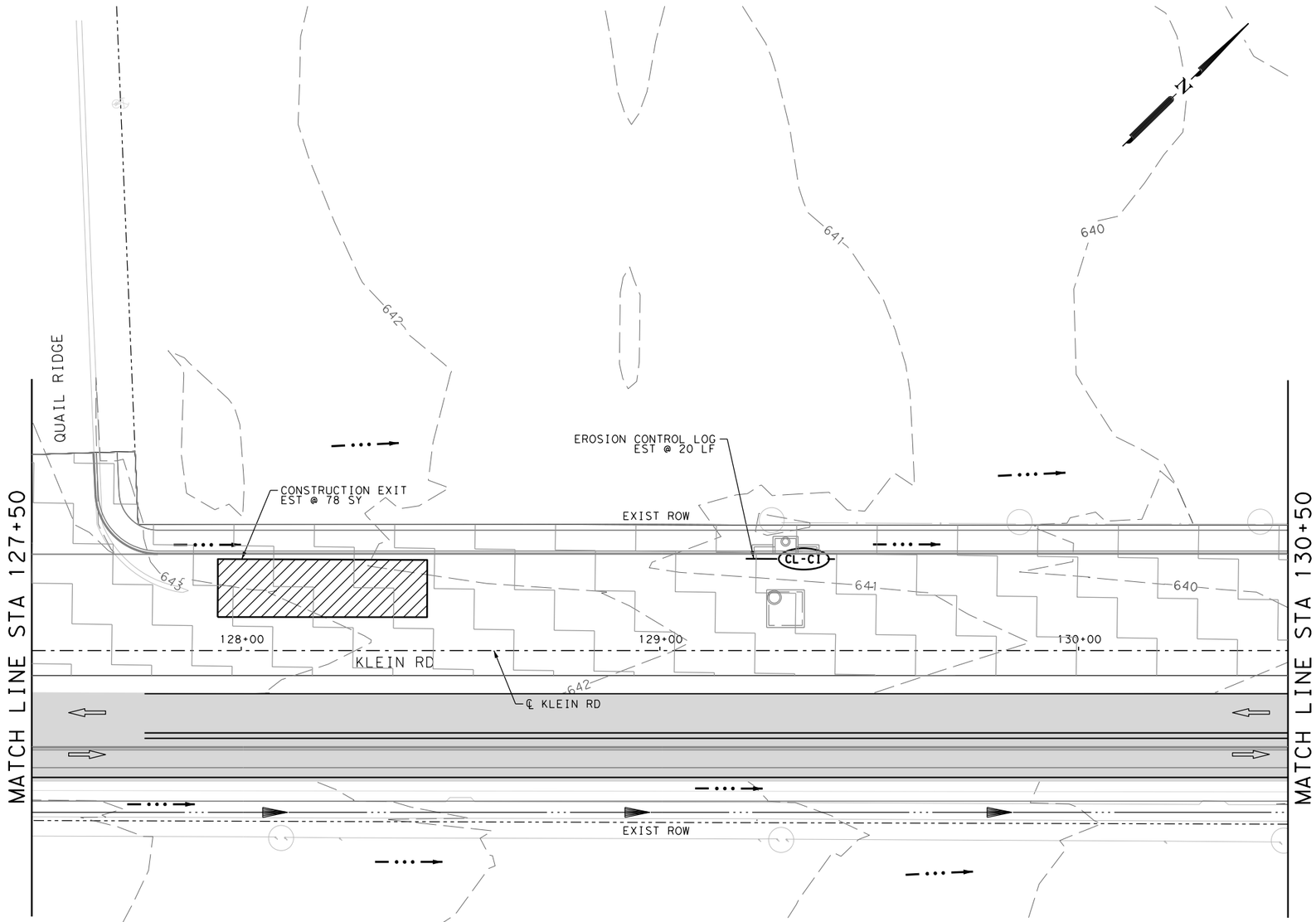

LEGEND

- TRAFFIC FLOW ARROWS
- FLOW ARROW
- SCF — SEDIMENT CONTROL FENCE
- RFD2 — TY 2 ROCK FILTER DAM
- RFD3 — TY 3 ROCK FILTER DAM
- CONSTRUCTION EXIT
- CL-CI — EROSION CONTROL LOG
- CONSTRUCTION PHASE
- WETLAND AREA

DESIGN

INTERIM REVIEW
DOCUMENT INCOMPLETE. NOT INTENDED FOR PERMIT, BIDDING OR CONSTRUCTION.
ENGINEER: TYLER PAYNE DUBE
P.E. SERIAL NO: 118612
DATE: 1/9/2020

APPROVAL

INTERIM REVIEW
DOCUMENT INCOMPLETE. NOT INTENDED FOR PERMIT, BIDDING OR CONSTRUCTION.
ENGINEER: JOHN A. TYLER
P.E. SERIAL NO: 105193
DATE: 1/9/2020

0 10 20 30 60

SCALE: PLAN 1"= 30'

REV. NO.	DATE	DESCRIPTION	BY

PAPE-DAWSON ENGINEERS
SAN ANTONIO | AUSTIN | HOUSTON | FORT WORTH | DALLAS
2000 NW LOOP 410 | SAN ANTONIO, TX 78213 | 210.375.9000
TBPE FIRM REGISTRATION #470 | TBPLS FIRM REGISTRATION #10028800

City of New Braunfels

KLEIN RD PHASE 2

SW3P LAYOUT PHASE 2 STEP 1

SHEET 10 OF 18

DGN:	STATE	PROJECT NO.	ROADWAY
CHK DGN:	TEXAS	NB 18-026	KLEIN RD
DWG:	COUNTY	CITY	SHEET NO.
CHK DWG:	GUADALUPE	NEW BRAUNFELS	260

NOTES:

1. THE MEASURES SHOWN ARE SUGGESTED PLACEMENTS OF SW3P ITEMS. THE ENGINEER MAY MODIFY AS FIELD CONDITIONS REQUIRE.
2. SW3P LAYOUTS CORRESPOND WITH TCP PHASING.
3. LOCATION OF CONSTRUCTION EXIT/ENTRANCE TO BE DETERMINED IN THE FIELD BY THE ENGINEER.
4. SEDIMENT CONTROL FENCE SHALL BE REPLACED BY CONTRACTOR AS NEEDED IN SUBSEQUENT PHASES OF CONSTRUCTION.
5. STAGING, STORAGE, AND SPOILS LOCATIONS ARE ONLY PERMITTED WITHIN THE CONSTRUCTION AREA.
6. PER TPDES REQUIREMENTS, DISTRIBUTED AREAS ON WHICH CONSTRUCTION ACTIVITIES HAVE CEASED (TEMPORARILY OR PERMANENTLY) SHALL BE STABILIZED WITHIN 14 DAYS UNLESS ACTIVITY RESUMES WITHIN 21 DAYS. SEEDING DOES NOT CONSTITUTE AS STABILIZATION.

Plotted on: 1/9/2020

Design Filename: H:\Projects\510\30\03\Design\Civil\SW3P\Phase2\5103003sw3p210.dgn

Plotted on: 1/9/2020

Design Filename: H:\Projects\510\30\03\Design\Civil\SW3P\Phase2\5103003sw3p211.dgn

ITEM	DESCRIPTION	UNIT	QTY
0506-6002	ROCK FILTER DAMS (INSTALL) (TY 2)	LF	20
0506-6011	ROCK FILTER DAMS (REMOVE)	LF	20
0506-6020	CONSTRUCTION EXITS (INSTALL) (TY 1)	SY	78
0506-6024	CONSTRUCTION EXITS (REMOVE)	SY	78
0506-6041	BIODEG EROSN CONT LOGS (INSTL) (12")	LF	20
0506-6043	BIODEG EROSN CONT LOGS (REMOVE)	LF	20

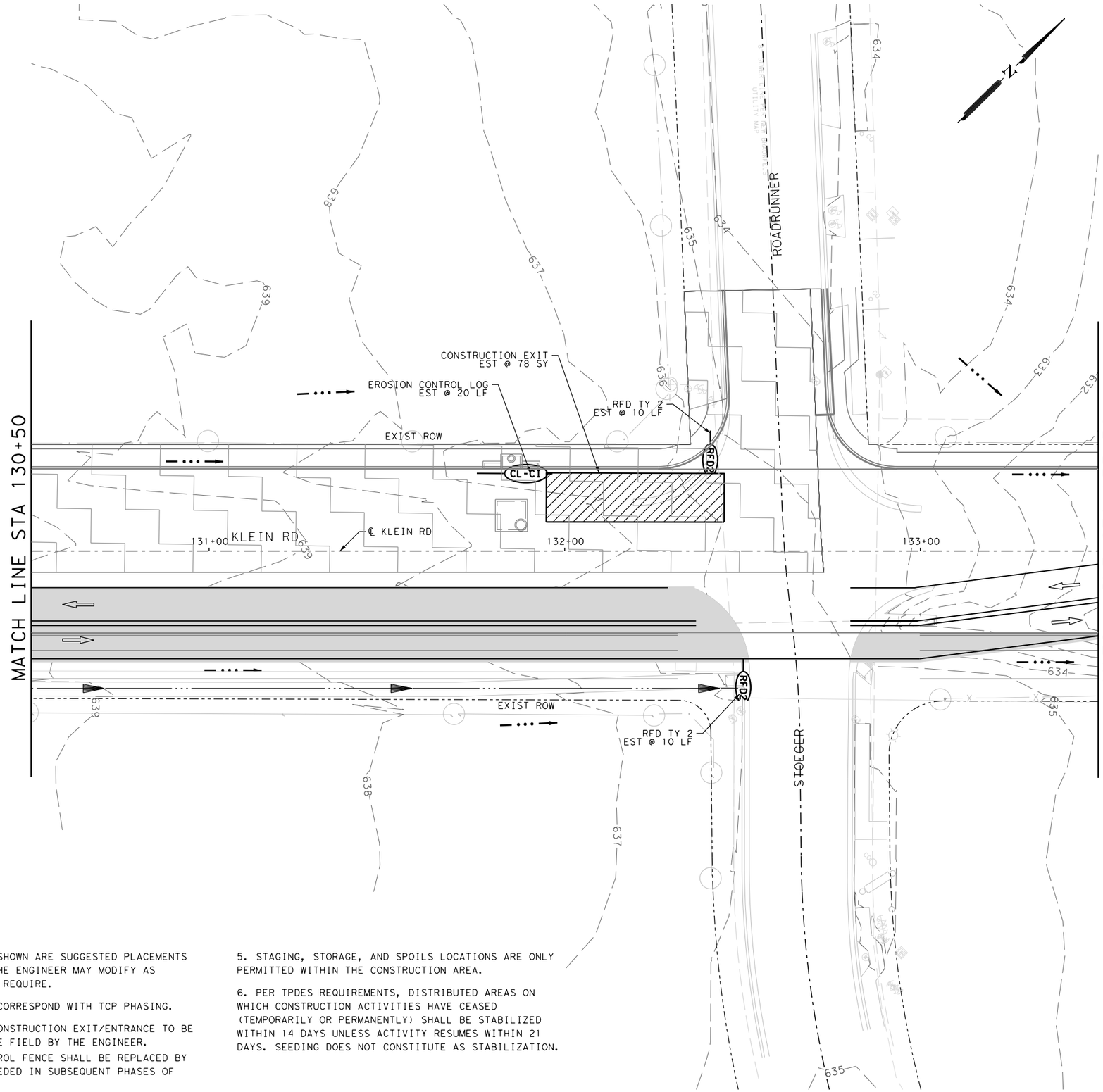

LEGEND

- TRAFFIC FLOW ARROWS
- FLOW ARROW
- SCF — SEDIMENT CONTROL FENCE
- RFD2 — TY 2 ROCK FILTER DAM
- RFD3 — TY 3 ROCK FILTER DAM
- CONSTRUCTION EXIT
- CL-C1 — EROSION CONTROL LOG
- CONSTRUCTION PHASE
- WETLAND AREA

NOTES:

1. THE MEASURES SHOWN ARE SUGGESTED PLACEMENTS OF SW3P ITEMS. THE ENGINEER MAY MODIFY AS FIELD CONDITIONS REQUIRE.
2. SW3P LAYOUTS CORRESPOND WITH TCP PHASING.
3. LOCATION OF CONSTRUCTION EXIT/ENTRANCE TO BE DETERMINED IN THE FIELD BY THE ENGINEER.
4. SEDIMENT CONTROL FENCE SHALL BE REPLACED BY CONTRACTOR AS NEEDED IN SUBSEQUENT PHASES OF CONSTRUCTION.
5. STAGING, STORAGE, AND SPOILS LOCATIONS ARE ONLY PERMITTED WITHIN THE CONSTRUCTION AREA.
6. PER TPDES REQUIREMENTS, DISTRIBUTED AREAS ON WHICH CONSTRUCTION ACTIVITIES HAVE CEASED (TEMPORARILY OR PERMANENTLY) SHALL BE STABILIZED WITHIN 14 DAYS UNLESS ACTIVITY RESUMES WITHIN 21 DAYS. SEEDING DOES NOT CONSTITUTE AS STABILIZATION.

DESIGN

INTERIM REVIEW
DOCUMENT INCOMPLETE. NOT INTENDED FOR PERMIT, BIDDING OR CONSTRUCTION.
ENGINEER: TYLER PAYNE DUBE
P.E. SERIAL NO: 118612
DATE: 1/9/2020

APPROVAL

INTERIM REVIEW
DOCUMENT INCOMPLETE. NOT INTENDED FOR PERMIT, BIDDING OR CONSTRUCTION.
ENGINEER: JOHN A. TYLER
P.E. SERIAL NO: 105193
DATE: 1/9/2020

0 10 20 30 60

SCALE: PLAN 1"= 30'

REV. NO.	DATE	DESCRIPTION	BY

PAPE-DAWSON ENGINEERS
SAN ANTONIO | AUSTIN | HOUSTON | FORT WORTH | DALLAS
2000 NW LOOP 410 | SAN ANTONIO, TX 78213 | 210.375.9000
TBPE FIRM REGISTRATION #470 | TBPLS FIRM REGISTRATION #10028800

City of New Braunfels

KLEIN RD PHASE 2

SW3P LAYOUT PHASE 2 STEP 1

SHEET 11 OF 18

DGN:	STATE	PROJECT NO.	ROADWAY
CHK DGN:	TEXAS	NB 18-026	KLEIN RD
DWG:	COUNTY	CITY	SHEET NO.
CHK DWG:	GUADALUPE	NEW BRAUNFELS	261

Plotted on: 1/9/2020

Design Filename: H:\Projects\510\30\03\Design\Civil\SW3P\Phase2\5103003sw3p212.dgn

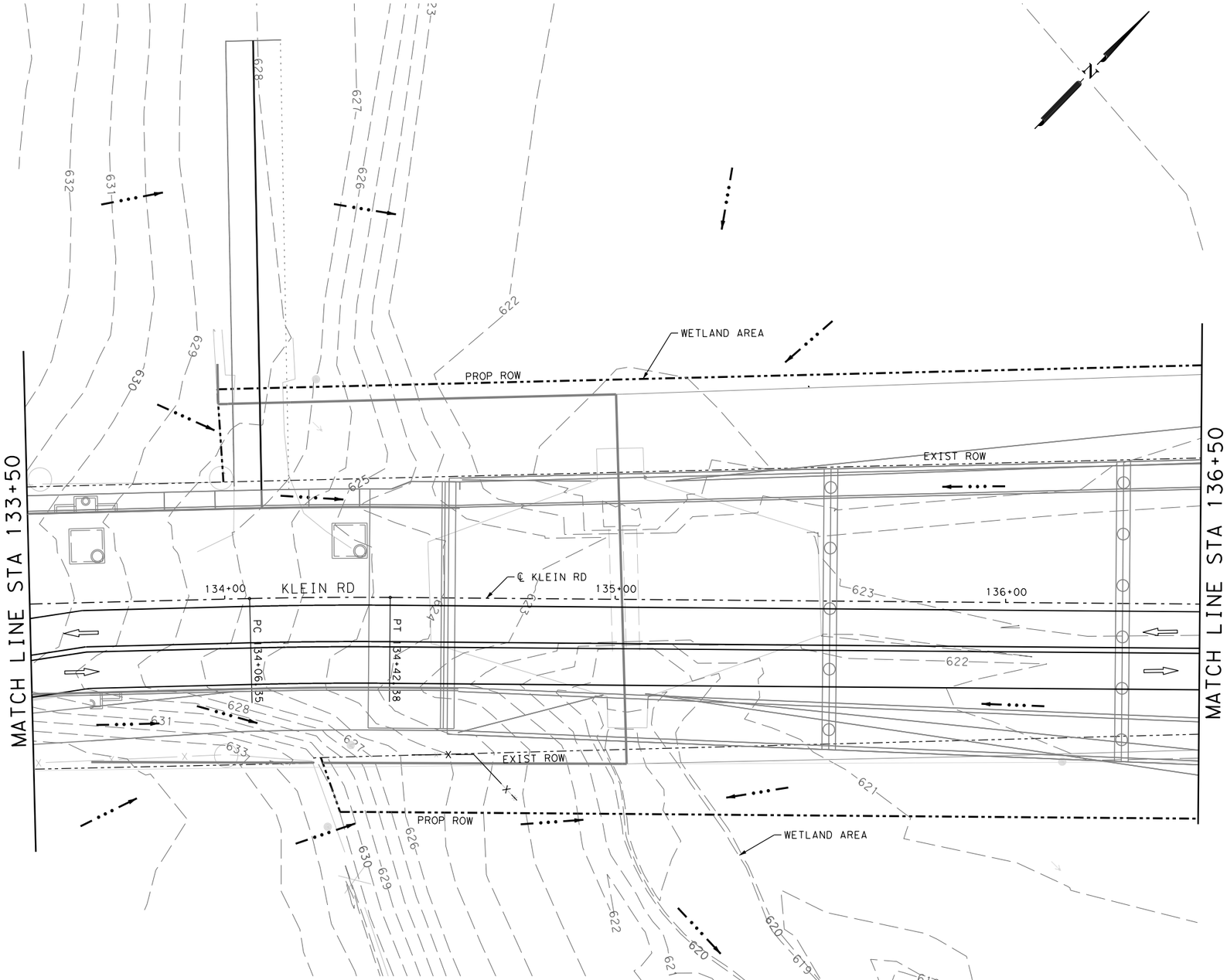

ITEM	DESCRIPTION	UNIT	QTY

LEGEND

- TRAFFIC FLOW ARROWS
- FLOW ARROW
- SCF — SEDIMENT CONTROL FENCE
- RFD2 — TY 2 ROCK FILTER DAM
- RFD3 — TY 3 ROCK FILTER DAM
- CONSTRUCTION EXIT
- CL-CI — EROSION CONTROL LOG
- CONSTRUCTION PHASE
- WETLAND AREA

DESIGN

INTERIM REVIEW

DOCUMENT INCOMPLETE. NOT INTENDED FOR PERMIT, BIDDING OR CONSTRUCTION.
ENGINEER: TYLER PAYNE DUBE
P.E. SERIAL NO: 118612
DATE: 1/9/2020

APPROVAL

INTERIM REVIEW

DOCUMENT INCOMPLETE. NOT INTENDED FOR PERMIT, BIDDING OR CONSTRUCTION.
ENGINEER: JOHN A. TYLER
P.E. SERIAL NO: 105193
DATE: 1/9/2020

0 10 20 30 60

SCALE: PLAN 1"= 30'

REV. NO.	DATE	DESCRIPTION	BY

NOTES:

1. THE MEASURES SHOWN ARE SUGGESTED PLACEMENTS OF SW3P ITEMS. THE ENGINEER MAY MODIFY AS FIELD CONDITIONS REQUIRE.
2. SW3P LAYOUTS CORRESPOND WITH TCP PHASING.
3. LOCATION OF CONSTRUCTION EXIT/ENTRANCE TO BE DETERMINED IN THE FIELD BY THE ENGINEER.
4. SEDIMENT CONTROL FENCE SHALL BE REPLACED BY CONTRACTOR AS NEEDED IN SUBSEQUENT PHASES OF CONSTRUCTION.
5. STAGING, STORAGE, AND SPOILS LOCATIONS ARE ONLY PERMITTED WITHIN THE CONSTRUCTION AREA.
6. PER TPDES REQUIREMENTS, DISTRIBUTED AREAS ON WHICH CONSTRUCTION ACTIVITIES HAVE CEASED (TEMPORARILY OR PERMANENTLY) SHALL BE STABILIZED WITHIN 14 DAYS UNLESS ACTIVITY RESUMES WITHIN 21 DAYS. SEEDING DOES NOT CONSTITUTE AS STABILIZATION.

PAPE-DAWSON ENGINEERS
SAN ANTONIO | AUSTIN | HOUSTON | FORT WORTH | DALLAS
2000 NW LOOP 410 | SAN ANTONIO, TX 78213 | 210.375.9000
TBPE FIRM REGISTRATION #470 | TBPLS FIRM REGISTRATION #10028800

City of New Braunfels

KLEIN RD PHASE 2

SW3P LAYOUT PHASE 2 STEP 1

SHEET 12 OF 18

DGN:	STATE	PROJECT NO.	ROADWAY
CHK DGN:	TEXAS	NB 18-026	KLEIN RD
DWG:	COUNTY	CITY	SHEET NO.
CHK DWG:	GUADALUPE	NEW BRAUNFELS	262

Plotted on: 1/9/2020

Design Filename: H:\Projects\510\30\03\Design\Civil\SW3P\Phase2\5103003sw3p213.dgn

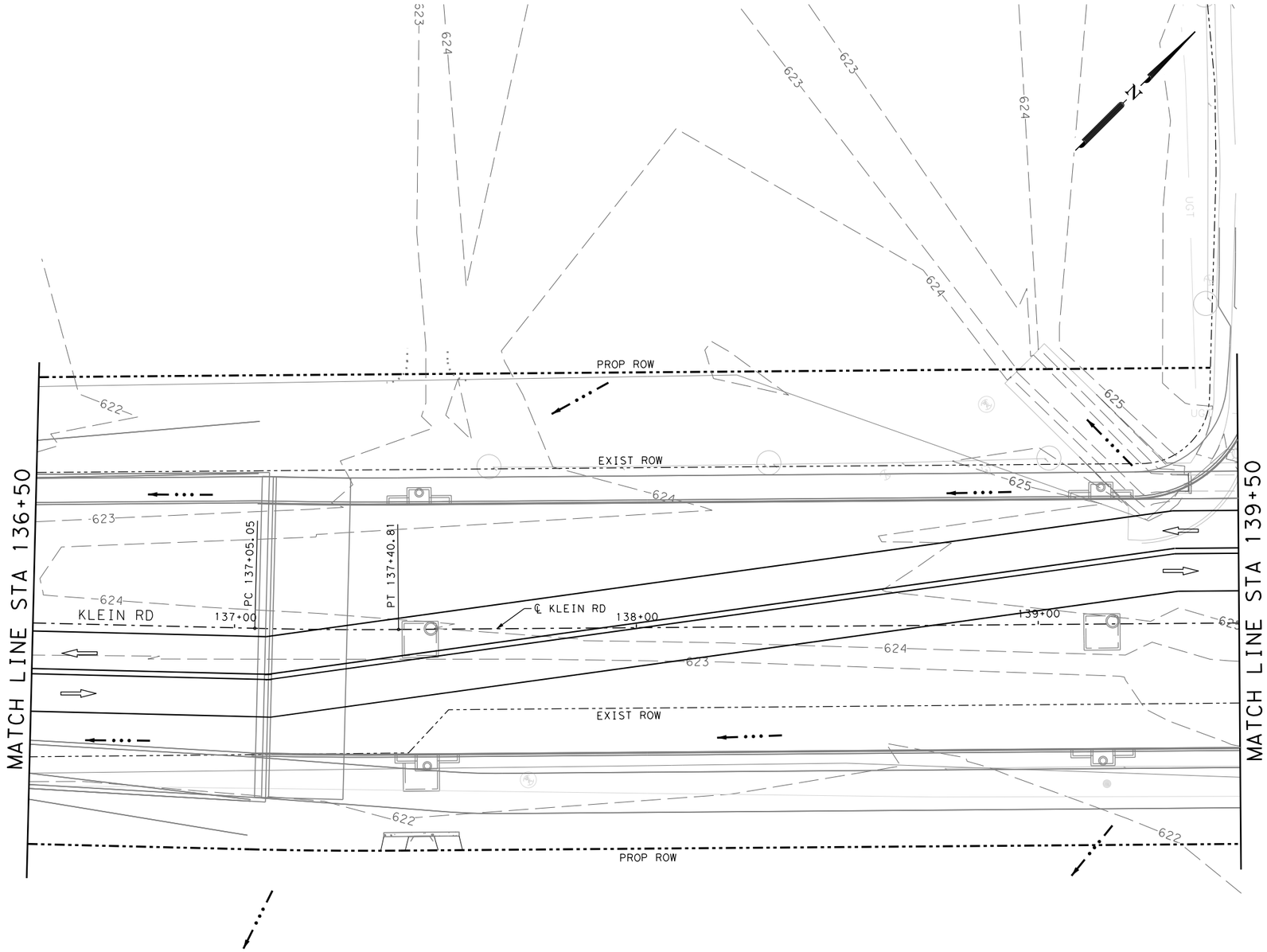

NOTES:

1. THE MEASURES SHOWN ARE SUGGESTED PLACEMENTS OF SW3P ITEMS. THE ENGINEER MAY MODIFY AS FIELD CONDITIONS REQUIRE.
2. SW3P LAYOUTS CORRESPOND WITH TCP PHASING.
3. LOCATION OF CONSTRUCTION EXIT/ENTRANCE TO BE DETERMINED IN THE FIELD BY THE ENGINEER.
4. SEDIMENT CONTROL FENCE SHALL BE REPLACED BY CONTRACTOR AS NEEDED IN SUBSEQUENT PHASES OF CONSTRUCTION.
5. STAGING, STORAGE, AND SPOILS LOCATIONS ARE ONLY PERMITTED WITHIN THE CONSTRUCTION AREA.
6. PER TPDES REQUIREMENTS, DISTRIBUTED AREAS ON WHICH CONSTRUCTION ACTIVITIES HAVE CEASED (TEMPORARILY OR PERMANENTLY) SHALL BE STABILIZED WITHIN 14 DAYS UNLESS ACTIVITY RESUMES WITHIN 21 DAYS. SEEDING DOES NOT CONSTITUTE AS STABILIZATION.

ITEM	DESCRIPTION	UNIT	QTY

LEGEND

- TRAFFIC FLOW ARROWS
- FLOW ARROW
- SCF — SEDIMENT CONTROL FENCE
- RFD2 — TY 2 ROCK FILTER DAM
- RFD3 — TY 3 ROCK FILTER DAM
- CONSTRUCTION EXIT
- CL-CI — EROSION CONTROL LOG
- CONSTRUCTION PHASE
- WETLAND AREA

DESIGN

INTERIM REVIEW
DOCUMENT INCOMPLETE. NOT INTENDED FOR PERMIT, BIDDING OR CONSTRUCTION.
ENGINEER: TYLER PAYNE DUBE
P.E. SERIAL NO: 118612
DATE: 1/9/2020

APPROVAL

INTERIM REVIEW
DOCUMENT INCOMPLETE. NOT INTENDED FOR PERMIT, BIDDING OR CONSTRUCTION.
ENGINEER: JOHN A. TYLER
P.E. SERIAL NO: 105193
DATE: 1/9/2020

0 10 20 30 60

SCALE: PLAN 1" = 30'

REV. NO.	DATE	DESCRIPTION	BY

PAPE-DAWSON ENGINEERS
SAN ANTONIO | AUSTIN | HOUSTON | FORT WORTH | DALLAS
2000 NW LOOP 410 | SAN ANTONIO, TX 78213 | 210.375.9000
TBPE FIRM REGISTRATION #470 | TBPLS FIRM REGISTRATION #10028800

City of New Braunfels

KLEIN RD PHASE 2

SW3P LAYOUT PHASE 2 STEP 1

SHEET 13 OF 18

DGN:	STATE	PROJECT NO.	ROADWAY
CHK DGN:	TEXAS	NB 18-026	KLEIN RD
DWG:	COUNTY	CITY	SHEET NO.
CHK DWG:	GUADALUPE	NEW BRAUNFELS	263

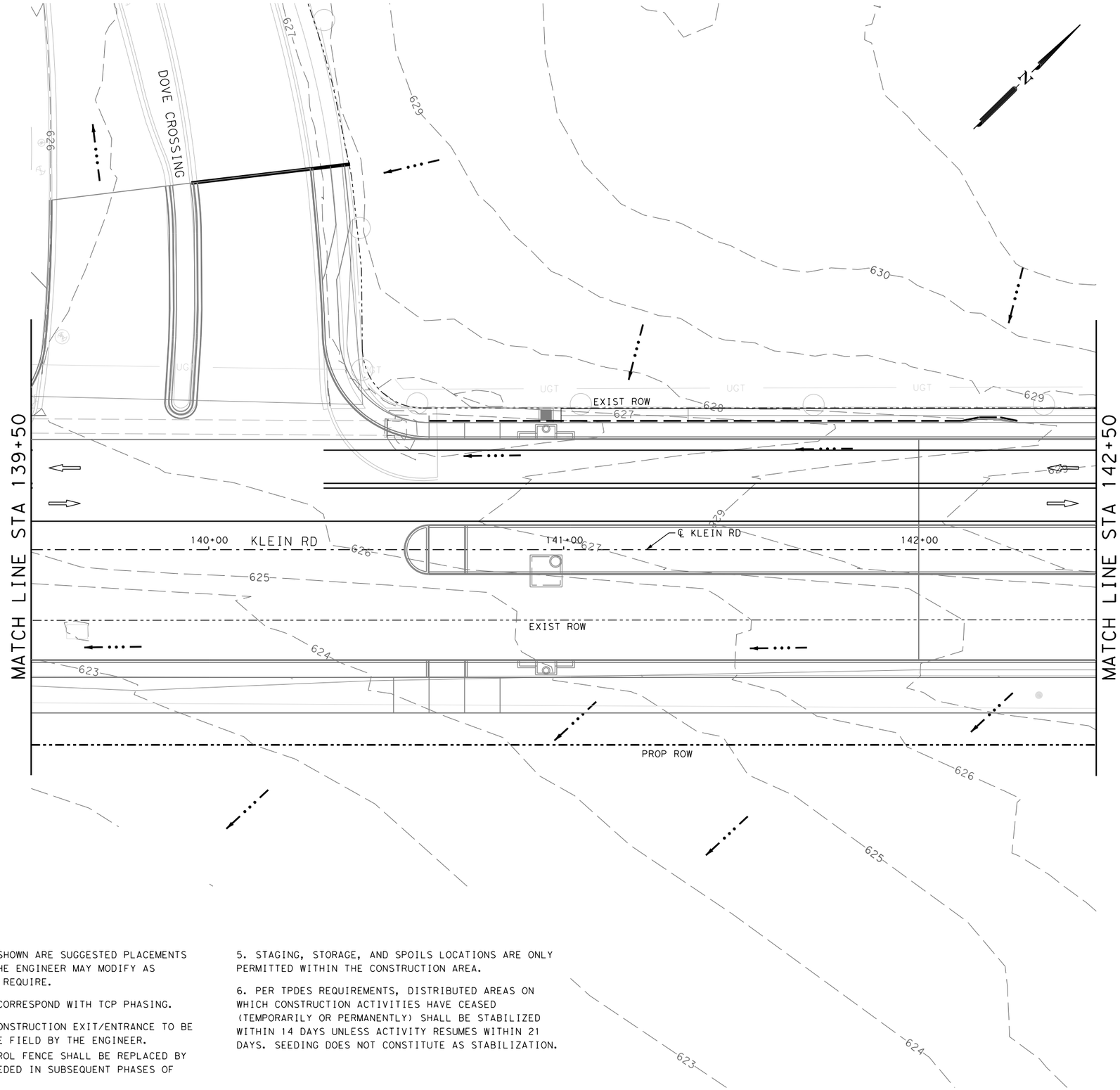

ITEM	DESCRIPTION	UNIT	QTY

LEGEND

- TRAFFIC FLOW ARROWS
- FLOW ARROW
- SCF — SEDIMENT CONTROL FENCE
- RFD2 — TY 2 ROCK FILTER DAM
- RFD3 — TY 3 ROCK FILTER DAM
- CONSTRUCTION EXIT
- CL-CI — EROSION CONTROL LOG
- CONSTRUCTION PHASE
- WETLAND AREA

NOTES:

1. THE MEASURES SHOWN ARE SUGGESTED PLACEMENTS OF SW3P ITEMS. THE ENGINEER MAY MODIFY AS FIELD CONDITIONS REQUIRE.
2. SW3P LAYOUTS CORRESPOND WITH TCP PHASING.
3. LOCATION OF CONSTRUCTION EXIT/ENTRANCE TO BE DETERMINED IN THE FIELD BY THE ENGINEER.
4. SEDIMENT CONTROL FENCE SHALL BE REPLACED BY CONTRACTOR AS NEEDED IN SUBSEQUENT PHASES OF CONSTRUCTION.
5. STAGING, STORAGE, AND SPOILS LOCATIONS ARE ONLY PERMITTED WITHIN THE CONSTRUCTION AREA.
6. PER TPDES REQUIREMENTS, DISTRIBUTED AREAS ON WHICH CONSTRUCTION ACTIVITIES HAVE CEASED (TEMPORARILY OR PERMANENTLY) SHALL BE STABILIZED WITHIN 14 DAYS UNLESS ACTIVITY RESUMES WITHIN 21 DAYS. SEEDING DOES NOT CONSTITUTE AS STABILIZATION.

DESIGN

INTERIM REVIEW
DOCUMENT INCOMPLETE. NOT INTENDED FOR PERMIT, BIDDING OR CONSTRUCTION.
ENGINEER: TYLER PAYNE DUBE
P.E. SERIAL NO: 118612
DATE: 1/9/2020

APPROVAL

INTERIM REVIEW
DOCUMENT INCOMPLETE. NOT INTENDED FOR PERMIT, BIDDING OR CONSTRUCTION.
ENGINEER: JOHN A. TYLER
P.E. SERIAL NO: 105193
DATE: 1/9/2020

0 10 20 30 60

SCALE: PLAN 1" = 30'

REV. NO.	DATE	DESCRIPTION	BY

PAPE-DAWSON ENGINEERS
SAN ANTONIO | AUSTIN | HOUSTON | FORT WORTH | DALLAS
2000 NW LOOP 410 | SAN ANTONIO, TX 78213 | 210.375.9000
TBPE FIRM REGISTRATION #470 | TBPLS FIRM REGISTRATION #10028800

City of New Braunfels

KLEIN RD PHASE 2

SW3P LAYOUT PHASE 2 STEP 1

SHEET 14 OF 18

DGN:	STATE	PROJECT NO.	ROADWAY
CHK DGN:	TEXAS	NB 18-026	KLEIN RD
DWG:	COUNTY	CITY	SHEET NO.
CHK DWG:	GUADALUPE	NEW BRAUNFELS	264

Plotted on: 1/9/2020

Design Filename: H:\Projects\510\30\03\Design\Civil\SW3P\Phase2\5103003sw3p214.dgn

Plotted on: 1/9/2020

ITEM	DESCRIPTION	UNIT	QTY
0506-6038	TEMP SEDMT CONT FENCE (INSTALL)	LF	275
0506-6039	TEMP SEDMT CONT FENCE (REMOVE)	LF	275
0506-6041	BIODEG EROSN CONT LOGS (INSTL) (12")	LF	20
0506-6043	BIODEG EROSN CONT LOGS (REMOVE)	LF	20

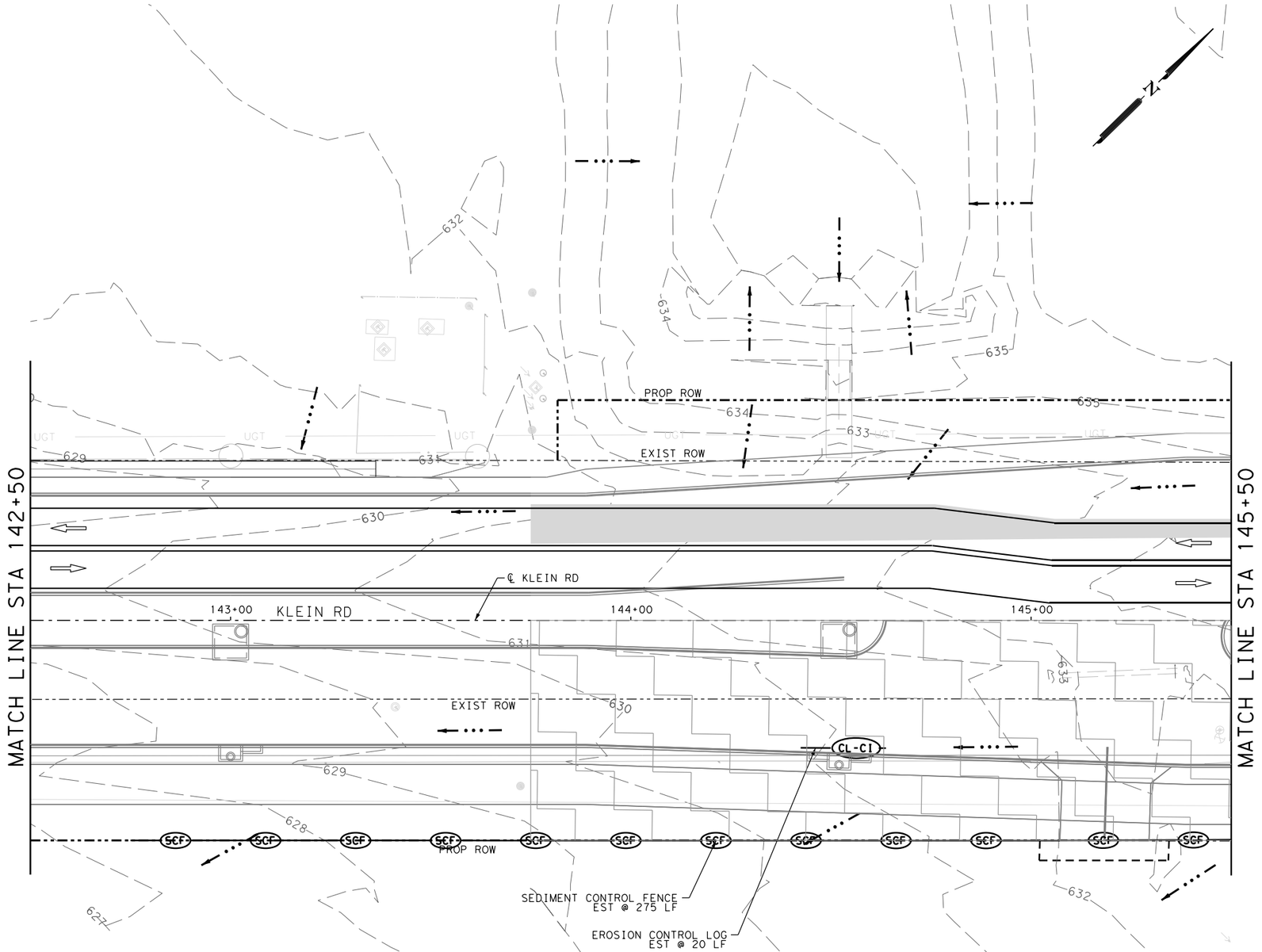

LEGEND

- TRAFFIC FLOW ARROWS
- FLOW ARROW
- SCF — SEDIMENT CONTROL FENCE
- RFD2 — TY 2 ROCK FILTER DAM
- RFD3 — TY 3 ROCK FILTER DAM
- CONSTRUCTION EXIT
- CL-CI — EROSION CONTROL LOG
- CONSTRUCTION PHASE
- WETLAND AREA

NOTES:

1. THE MEASURES SHOWN ARE SUGGESTED PLACEMENTS OF SW3P ITEMS. THE ENGINEER MAY MODIFY AS FIELD CONDITIONS REQUIRE.
2. SW3P LAYOUTS CORRESPOND WITH TCP PHASING.
3. LOCATION OF CONSTRUCTION EXIT/ENTRANCE TO BE DETERMINED IN THE FIELD BY THE ENGINEER.
4. SEDIMENT CONTROL FENCE SHALL BE REPLACED BY CONTRACTOR AS NEEDED IN SUBSEQUENT PHASES OF CONSTRUCTION.
5. STAGING, STORAGE, AND SPOILS LOCATIONS ARE ONLY PERMITTED WITHIN THE CONSTRUCTION AREA.
6. PER TPDES REQUIREMENTS, DISTRIBUTED AREAS ON WHICH CONSTRUCTION ACTIVITIES HAVE CEASED (TEMPORARILY OR PERMANENTLY) SHALL BE STABILIZED WITHIN 14 DAYS UNLESS ACTIVITY RESUMES WITHIN 21 DAYS. SEEDING DOES NOT CONSTITUTE AS STABILIZATION.

DESIGN

INTERIM REVIEW
DOCUMENT INCOMPLETE. NOT INTENDED FOR PERMIT, BIDDING OR CONSTRUCTION.
ENGINEER: TYLER PAYNE DUBE
P.E. SERIAL NO: 118612
DATE: 1/9/2020

APPROVAL

INTERIM REVIEW
DOCUMENT INCOMPLETE. NOT INTENDED FOR PERMIT, BIDDING OR CONSTRUCTION.
ENGINEER: JOHN A. TYLER
P.E. SERIAL NO: 105193
DATE: 1/9/2020

0 10 20 30 60

SCALE: PLAN 1" = 30'

REV. NO.	DATE	DESCRIPTION	BY

PAPE-DAWSON ENGINEERS
SAN ANTONIO | AUSTIN | HOUSTON | FORT WORTH | DALLAS
2000 NW LOOP 410 | SAN ANTONIO, TX 78213 | 210.375.9000
TBPE FIRM REGISTRATION #470 | TBPLS FIRM REGISTRATION #10028800

City of New Braunfels

KLEIN RD PHASE 2

SW3P LAYOUT PHASE 2 STEP 1

SHEET 15 OF 18

DGN:	STATE	PROJECT NO.	ROADWAY
CHK DGN:	TEXAS	NB 18-026	KLEIN RD
DWG:	COUNTY	CITY	SHEET NO.
CHK DWG:	GUADALUPE	NEW BRAUNFELS	265

Design Filename: H:\Projects\510\30\03\Design\Civil\SW3P\Phase2\5103003sw3p215.dgn

Plotted on: 1/9/2020

ITEM	DESCRIPTION	UNIT	QTY
0506-6038	TEMP SEDMT CONT FENCE (INSTALL)	LF	300
0506-6039	TEMP SEDMT CONT FENCE (REMOVE)	LF	300
0506-6041	BIODEG EROSN CONT LOGS (INSTL) (12")	LF	20
0506-6043	BIODEG EROSN CONT LOGS (REMOVE)	LF	20

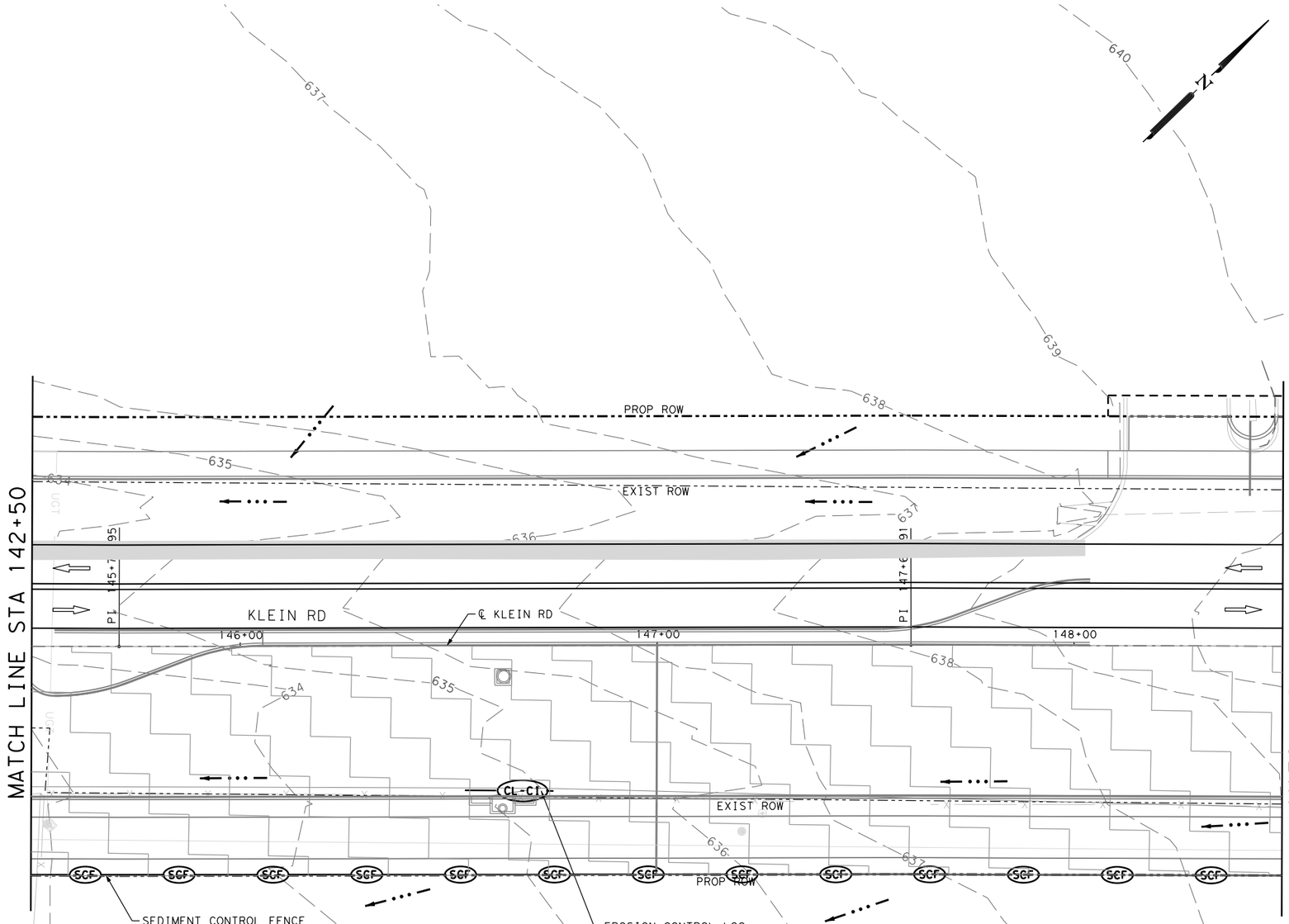

LEGEND

- TRAFFIC FLOW ARROWS
- FLOW ARROW
- SCF — SEDIMENT CONTROL FENCE
- RFD2 — TY 2 ROCK FILTER DAM
- RFD3 — TY 3 ROCK FILTER DAM
- CONSTRUCTION EXIT
- CL-CI — EROSION CONTROL LOG
- CONSTRUCTION PHASE
- WETLAND AREA

NOTES:

1. THE MEASURES SHOWN ARE SUGGESTED PLACEMENTS OF SW3P ITEMS. THE ENGINEER MAY MODIFY AS FIELD CONDITIONS REQUIRE.
2. SW3P LAYOUTS CORRESPOND WITH TCP PHASING.
3. LOCATION OF CONSTRUCTION EXIT/ENTRANCE TO BE DETERMINED IN THE FIELD BY THE ENGINEER.
4. SEDIMENT CONTROL FENCE SHALL BE REPLACED BY CONTRACTOR AS NEEDED IN SUBSEQUENT PHASES OF CONSTRUCTION.
5. STAGING, STORAGE, AND SPOILS LOCATIONS ARE ONLY PERMITTED WITHIN THE CONSTRUCTION AREA.
6. PER TPDES REQUIREMENTS, DISTRIBUTED AREAS ON WHICH CONSTRUCTION ACTIVITIES HAVE CEASED (TEMPORARILY OR PERMANENTLY) SHALL BE STABILIZED WITHIN 14 DAYS UNLESS ACTIVITY RESUMES WITHIN 21 DAYS. SEEDING DOES NOT CONSTITUTE AS STABILIZATION.

DESIGN

INTERIM REVIEW
DOCUMENT INCOMPLETE. NOT INTENDED FOR PERMIT, BIDDING OR CONSTRUCTION.
ENGINEER: TYLER PAYNE DUBE
P.E. SERIAL NO: 118612
DATE: 1/9/2020

APPROVAL

INTERIM REVIEW
DOCUMENT INCOMPLETE. NOT INTENDED FOR PERMIT, BIDDING OR CONSTRUCTION.
ENGINEER: JOHN A. TYLER
P.E. SERIAL NO: 105193
DATE: 1/9/2020

0 10 20 30 60

SCALE: PLAN 1"= 30'

REV. NO.	DATE	DESCRIPTION	BY

PAPE-DAWSON ENGINEERS
SAN ANTONIO | AUSTIN | HOUSTON | FORT WORTH | DALLAS
2000 NW LOOP 410 | SAN ANTONIO, TX 78213 | 210.375.9000
TBPE FIRM REGISTRATION #470 | TBPLS FIRM REGISTRATION #10028800

City of New Braunfels

KLEIN RD PHASE 2

SW3P LAYOUT PHASE 2 STEP 1

SHEET 16 OF 18

DGN:	STATE	PROJECT NO.	ROADWAY
CHK DGN:	TEXAS	NB 18-026	KLEIN RD
DWG:	COUNTY	CITY	SHEET NO.
CHK DWG:	GUADALUPE	NEW BRAUNFELS	266

Design Filename: H:\Projects\510\30\03\Design\Civil\SW3P\Phase2\5103003sw3p216.dgn

ITEM	DESCRIPTION	UNIT	QTY
0506-6038	TEMP SEDMT CONT FENCE (INSTALL)	LF	153
0506-6039	TEMP SEDMT CONT FENCE (REMOVE)	LF	153
0506-6041	BIODEG EROSN CONT LOGS (INSTL) (12")	LF	20
0506-6043	BIODEG EROSN CONT LOGS (REMOVE)	LF	20

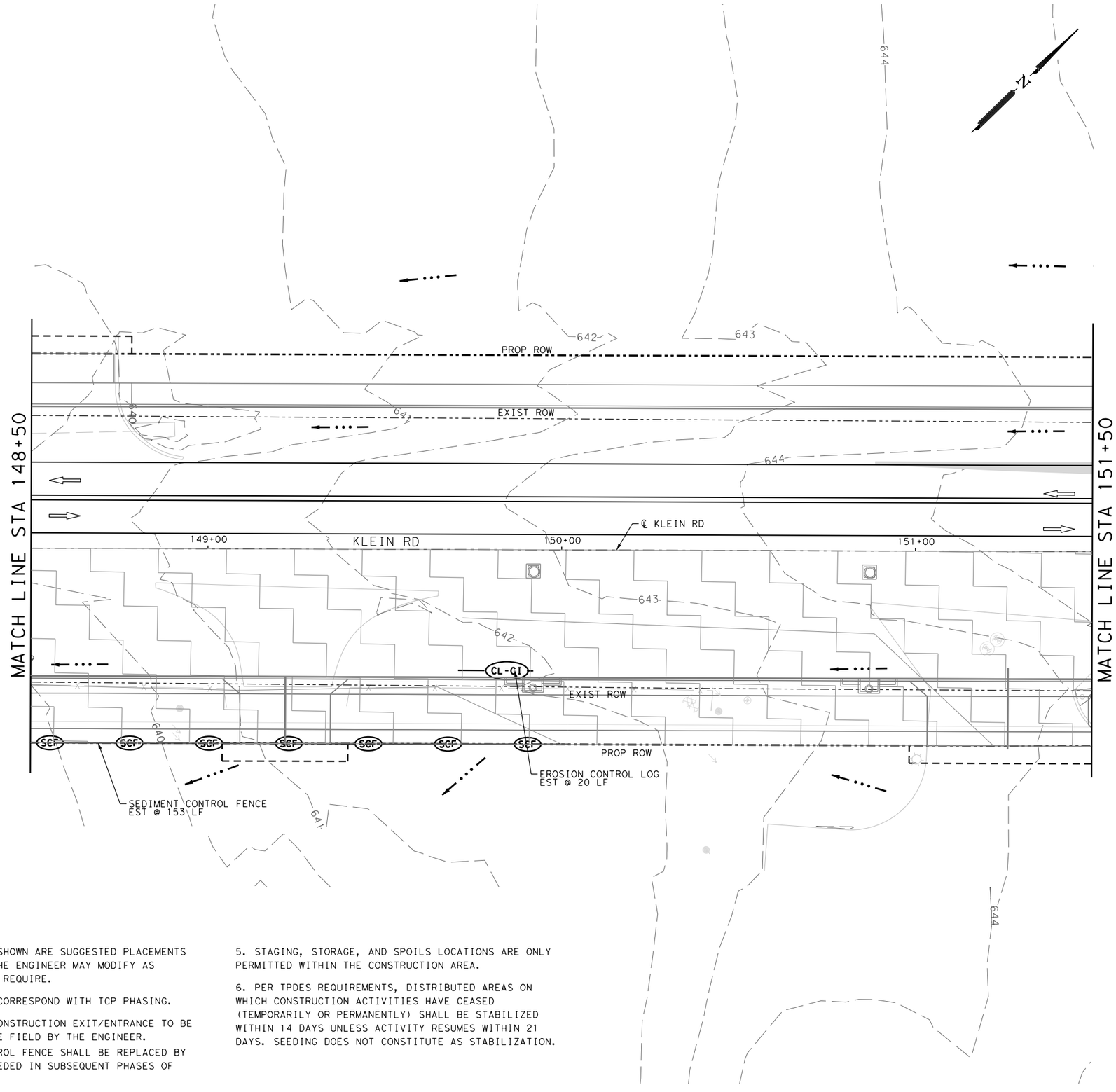

LEGEND

- TRAFFIC FLOW ARROWS
- FLOW ARROW
- SCF — SEDIMENT CONTROL FENCE
- RFD2 — TY 2 ROCK FILTER DAM
- RFD3 — TY 3 ROCK FILTER DAM
- CONSTRUCTION EXIT
- CL-CI — EROSION CONTROL LOG
- CONSTRUCTION PHASE
- WETLAND AREA

NOTES:

1. THE MEASURES SHOWN ARE SUGGESTED PLACEMENTS OF SW3P ITEMS. THE ENGINEER MAY MODIFY AS FIELD CONDITIONS REQUIRE.
2. SW3P LAYOUTS CORRESPOND WITH TCP PHASING.
3. LOCATION OF CONSTRUCTION EXIT/ENTRANCE TO BE DETERMINED IN THE FIELD BY THE ENGINEER.
4. SEDIMENT CONTROL FENCE SHALL BE REPLACED BY CONTRACTOR AS NEEDED IN SUBSEQUENT PHASES OF CONSTRUCTION.
5. STAGING, STORAGE, AND SPOILS LOCATIONS ARE ONLY PERMITTED WITHIN THE CONSTRUCTION AREA.
6. PER TPDES REQUIREMENTS, DISTRIBUTED AREAS ON WHICH CONSTRUCTION ACTIVITIES HAVE CEASED (TEMPORARILY OR PERMANENTLY) SHALL BE STABILIZED WITHIN 14 DAYS UNLESS ACTIVITY RESUMES WITHIN 21 DAYS. SEEDING DOES NOT CONSTITUTE AS STABILIZATION.

DESIGN

INTERIM REVIEW
DOCUMENT INCOMPLETE. NOT INTENDED FOR PERMIT, BIDDING OR CONSTRUCTION.
ENGINEER: TYLER PAYNE DUBE
P.E. SERIAL NO: 118612
DATE: 1/9/2020

APPROVAL

INTERIM REVIEW
DOCUMENT INCOMPLETE. NOT INTENDED FOR PERMIT, BIDDING OR CONSTRUCTION.
ENGINEER: JOHN A. TYLER
P.E. SERIAL NO: 105193
DATE: 1/9/2020

0 10 20 30 60

SCALE: PLAN 1"= 30'

REV. NO.	DATE	DESCRIPTION	BY

PAPE-DAWSON ENGINEERS
SAN ANTONIO | AUSTIN | HOUSTON | FORT WORTH | DALLAS
2000 NW LOOP 410 | SAN ANTONIO, TX 78213 | 210.375.9000
TBPE FIRM REGISTRATION #470 | TBPLS FIRM REGISTRATION #10028800

City of New Braunfels

KLEIN RD PHASE 2

SW3P LAYOUT PHASE 2 STEP 1

SHEET 17 OF 18

DGN:	STATE	PROJECT NO.	ROADWAY
CHK DGN:	TEXAS	NB 18-026	KLEIN RD
DWG:	COUNTY	CITY	SHEET NO.
CHK DWG:	GUADALUPE	NEW BRAUNFELS	267

Plotted on: 1/9/2020

Design Filename: H:\Projects\510\30\03\Design\Civil\SW3P\Phase2\5103003sw3p2217.dgn

Plotted on: 1/9/2020

Design Filename: H:\Projects\510\30\03\Design\Civil\SW3P\Phase2\5103003sw3p2218.dgn

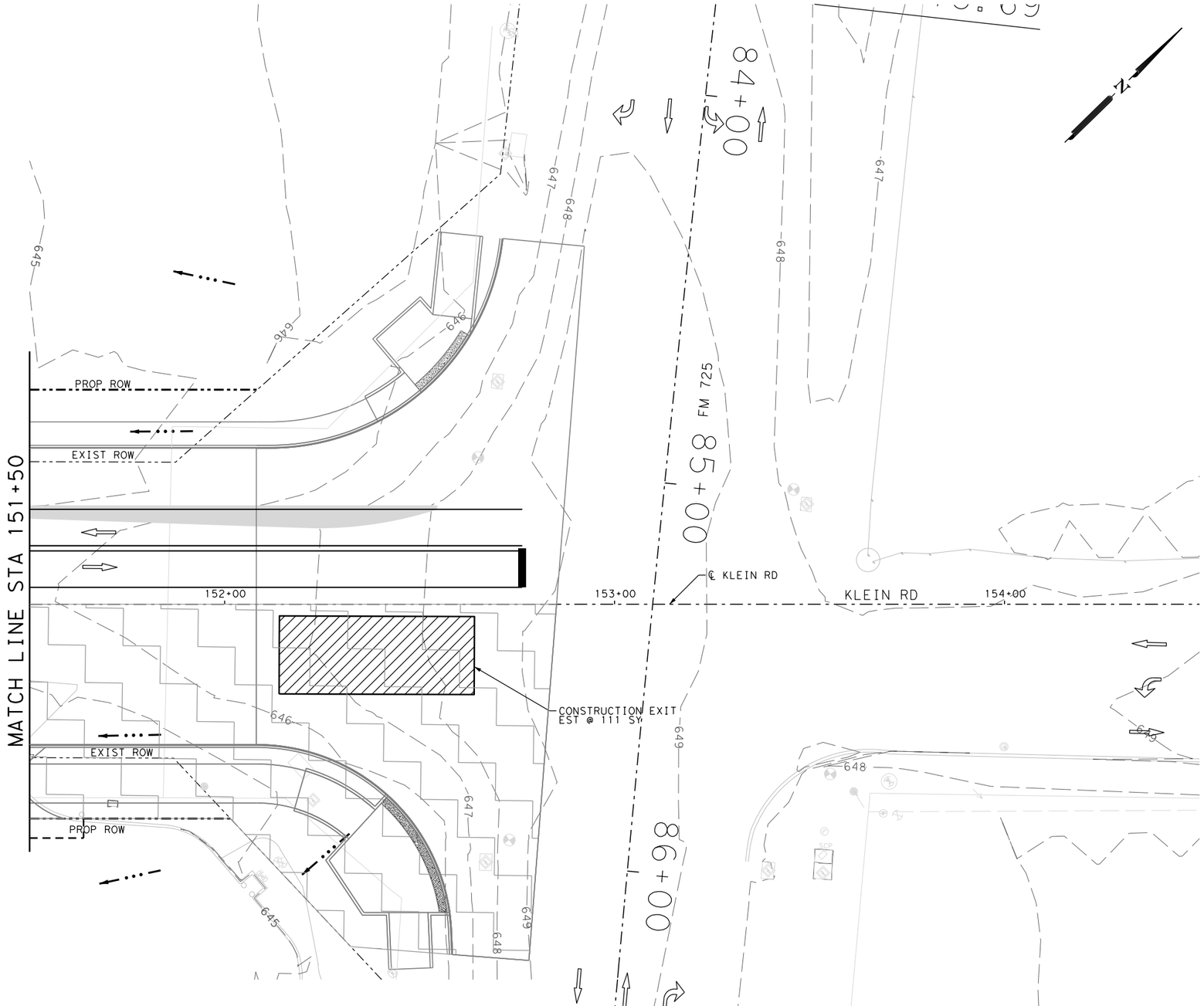

ITEM	DESCRIPTION	UNIT	QTY
0506-6020	CONSTRUCTION EXITS (INSTALL) (TY 1)	SY	111
0506-6024	CONSTRUCTION EXITS (REMOVE)	SY	111

LEGEND

- TRAFFIC FLOW ARROWS
- FLOW ARROW
- SCF — SEDIMENT CONTROL FENCE
- RFD2 — TY 2 ROCK FILTER DAM
- RFD3 — TY 3 ROCK FILTER DAM
- CONSTRUCTION EXIT
- CL-CI — EROSION CONTROL LOG
- CONSTRUCTION PHASE
- WETLAND AREA

NOTES:

1. THE MEASURES SHOWN ARE SUGGESTED PLACEMENTS OF SW3P ITEMS. THE ENGINEER MAY MODIFY AS FIELD CONDITIONS REQUIRE.
2. SW3P LAYOUTS CORRESPOND WITH TCP PHASING.
3. LOCATION OF CONSTRUCTION EXIT/ENTRANCE TO BE DETERMINED IN THE FIELD BY THE ENGINEER.
4. SEDIMENT CONTROL FENCE SHALL BE REPLACED BY CONTRACTOR AS NEEDED IN SUBSEQUENT PHASES OF CONSTRUCTION.
5. STAGING, STORAGE, AND SPOILS LOCATIONS ARE ONLY PERMITTED WITHIN THE CONSTRUCTION AREA.
6. PER TPDES REQUIREMENTS, DISTRIBUTED AREAS ON WHICH CONSTRUCTION ACTIVITIES HAVE CEASED (TEMPORARILY OR PERMANENTLY) SHALL BE STABILIZED WITHIN 14 DAYS UNLESS ACTIVITY RESUMES WITHIN 21 DAYS. SEEDING DOES NOT CONSTITUTE AS STABILIZATION.

DESIGN

INTERIM REVIEW
DOCUMENT INCOMPLETE. NOT INTENDED FOR PERMIT, BIDDING OR CONSTRUCTION.
ENGINEER: TYLER PAYNE DUBE
P.E. SERIAL NO: 118612
DATE: 1/9/2020

APPROVAL

INTERIM REVIEW
DOCUMENT INCOMPLETE. NOT INTENDED FOR PERMIT, BIDDING OR CONSTRUCTION.
ENGINEER: JOHN A. TYLER
P.E. SERIAL NO: 105193
DATE: 1/9/2020

0 10 20 30 60

SCALE: PLAN 1" = 30'

REV. NO.	DATE	DESCRIPTION	BY

PAPE-DAWSON ENGINEERS
SAN ANTONIO | AUSTIN | HOUSTON | FORT WORTH | DALLAS
2000 NW LOOP 410 | SAN ANTONIO, TX 78213 | 210.375.9000
TBPE FIRM REGISTRATION #470 | TBPLS FIRM REGISTRATION #10028800

City of New Braunfels

KLEIN RD PHASE 2

SW3P LAYOUT PHASE 2 STEP 1

SHEET 18 OF 18

DGN:	STATE	PROJECT NO.	ROADWAY
CHK DGN:	TEXAS	NB 18-026	KLEIN RD
DWG:	COUNTY	CITY	SHEET NO.
CHK DWG:	GUADALUPE	NEW BRAUNFELS	268

ITEM	DESCRIPTION	UNIT	QTY
0506-6043	BIODEG EROSN CONT LOGS (REMOVE)	LF	31

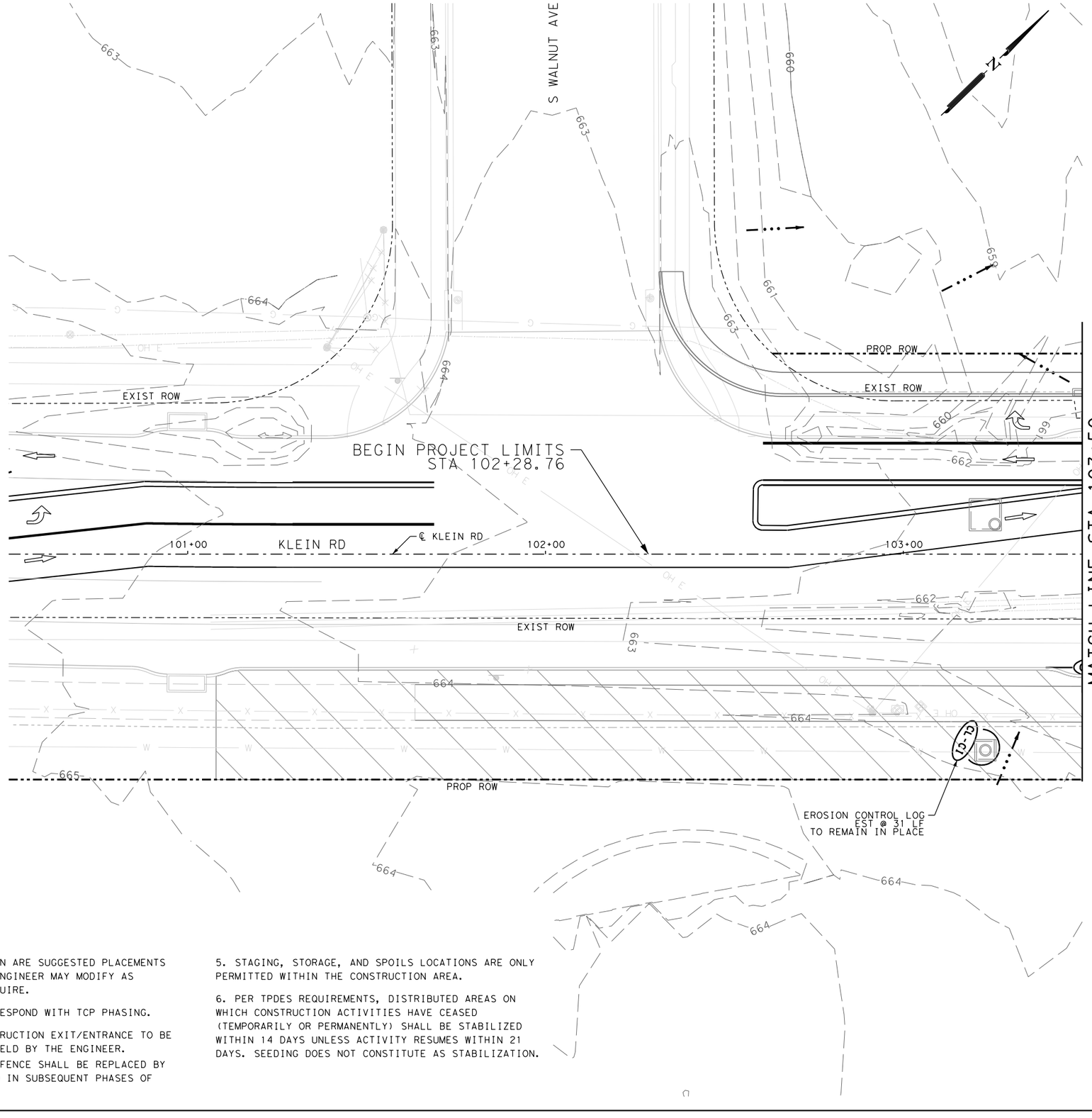

LEGEND

- TRAFFIC FLOW ARROWS
- FLOW ARROW
- SCF — SEDIMENT CONTROL FENCE
- RFD2 — TY 2 ROCK FILTER DAM
- RFD3 — TY 3 ROCK FILTER DAM
- CONSTRUCTION EXIT
- CL-CI — EROSION CONTROL LOG
- CONSTRUCTION PHASE
- WETLAND AREA

DESIGN

INTERIM REVIEW

DOCUMENT INCOMPLETE. NOT INTENDED FOR PERMIT, BIDDING OR CONSTRUCTION.
ENGINEER: TYLER PAYNE DUBE
P.E. SERIAL NO: 118612
DATE: 1/9/2020

APPROVAL

INTERIM REVIEW

DOCUMENT INCOMPLETE. NOT INTENDED FOR PERMIT, BIDDING OR CONSTRUCTION.
ENGINEER: JOHN A. TYLER
P.E. SERIAL NO: 105193
DATE: 1/9/2020

0 10 20 30 60

SCALE: PLAN 1" = 30'

REV. NO.	DATE	DESCRIPTION	BY

NOTES:

1. THE MEASURES SHOWN ARE SUGGESTED PLACEMENTS OF SW3P ITEMS. THE ENGINEER MAY MODIFY AS FIELD CONDITIONS REQUIRE.
2. SW3P LAYOUTS CORRESPOND WITH TCP PHASING.
3. LOCATION OF CONSTRUCTION EXIT/ENTRANCE TO BE DETERMINED IN THE FIELD BY THE ENGINEER.
4. SEDIMENT CONTROL FENCE SHALL BE REPLACED BY CONTRACTOR AS NEEDED IN SUBSEQUENT PHASES OF CONSTRUCTION.
5. STAGING, STORAGE, AND SPOILS LOCATIONS ARE ONLY PERMITTED WITHIN THE CONSTRUCTION AREA.
6. PER TPDES REQUIREMENTS, DISTRIBUTED AREAS ON WHICH CONSTRUCTION ACTIVITIES HAVE CEASED (TEMPORARILY OR PERMANENTLY) SHALL BE STABILIZED WITHIN 14 DAYS UNLESS ACTIVITY RESUMES WITHIN 21 DAYS. SEEDING DOES NOT CONSTITUTE AS STABILIZATION.

PAPE-DAWSON ENGINEERS
SAN ANTONIO | AUSTIN | HOUSTON | FORT WORTH | DALLAS
2000 NW LOOP 410 | SAN ANTONIO, TX 78213 | 210.375.9000
TBPE FIRM REGISTRATION #470 | TBPLS FIRM REGISTRATION #10028800

City of New Braunfels

KLEIN RD PHASE 2

SW3P LAYOUT PHASE 2 STEP 2

SHEET 1 OF 18

DGN:	STATE	PROJECT NO.	ROADWAY
CHK DGN:	TEXAS	NB 18-026	KLEIN RD
DWG:	COUNTY	CITY	SHEET NO.
CHK DWG:	GUADALUPE	NEW BRAUNFELS	269

Plotted on: 1/9/2020

Design Filename: H:\Projects\510\30\03\Design\Civil\SW3P\Phase2\5103003sw3p2A01.dgn

ITEM	DESCRIPTION	UNIT	QTY
0506-6020	CONSTRUCTION EXITS (INSTALL) (TY 1)	SY	111
0506-6024	CONSTRUCTION EXITS (REMOVE)	SY	111
0506-6041	BIODEG EROSN CONT LOGS (INSTL) (12")	LF	71
0506-6043	BIODEG EROSN CONT LOGS (REMOVE)	LF	40

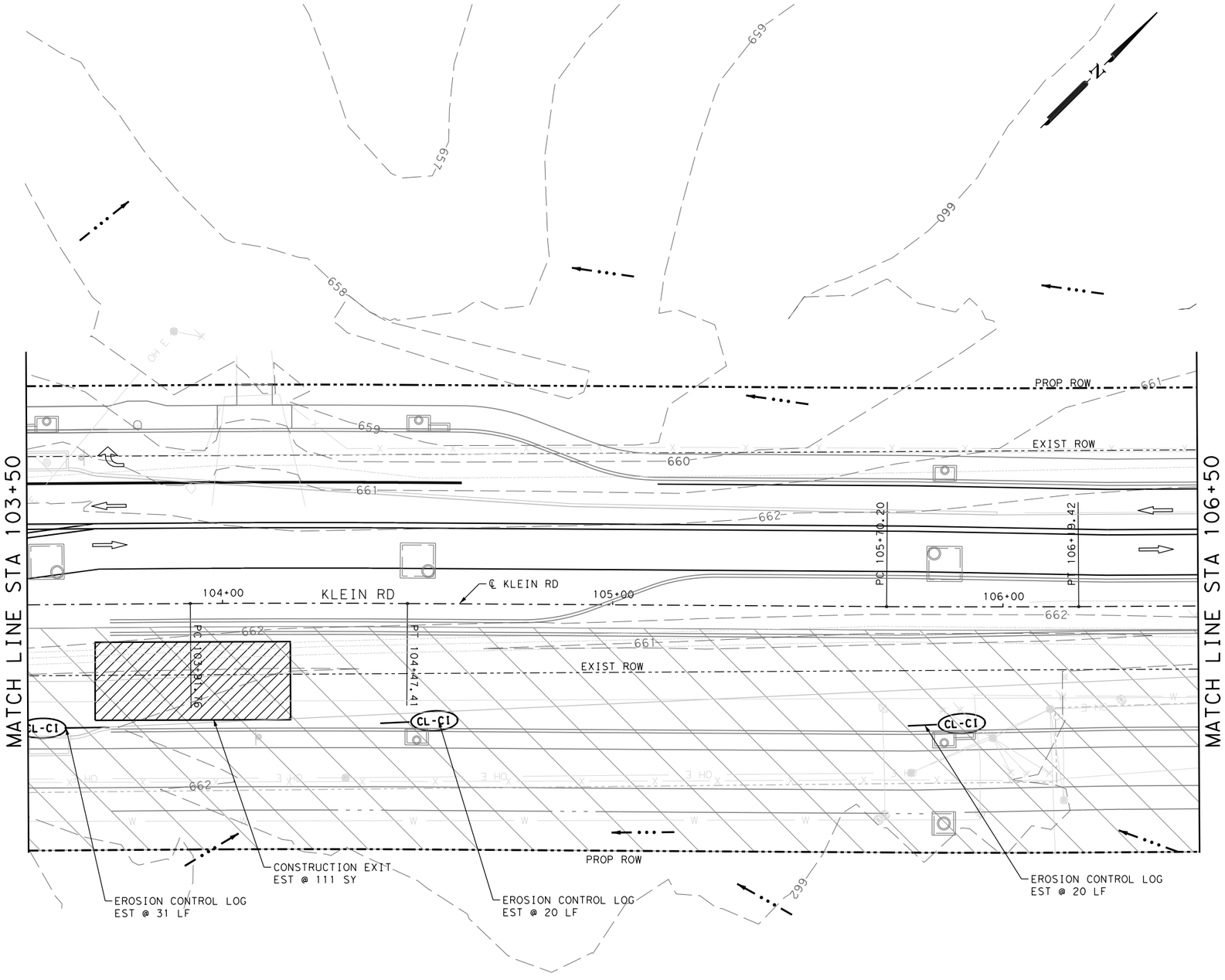

LEGEND

- TRAFFIC FLOW ARROWS
- FLOW ARROW
- SCF — SEDIMENT CONTROL FENCE
- RFD2 — TY 2 ROCK FILTER DAM
- RFD3 — TY 3 ROCK FILTER DAM
- CONSTRUCTION EXIT
- CL-CI — EROSION CONTROL LOG
- CONSTRUCTION PHASE
- WETLAND AREA

NOTES:

1. THE MEASURES SHOWN ARE SUGGESTED PLACEMENTS OF SW3P ITEMS. THE ENGINEER MAY MODIFY AS FIELD CONDITIONS REQUIRE.
2. SW3P LAYOUTS CORRESPOND WITH TCP PHASING.
3. LOCATION OF CONSTRUCTION EXIT/ENTRANCE TO BE DETERMINED IN THE FIELD BY THE ENGINEER.
4. SEDIMENT CONTROL FENCE SHALL BE REPLACED BY CONTRACTOR AS NEEDED IN SUBSEQUENT PHASES OF CONSTRUCTION.
5. STAGING, STORAGE, AND SPOILS LOCATIONS ARE ONLY PERMITTED WITHIN THE CONSTRUCTION AREA.
6. PER TPDES REQUIREMENTS, DISTRIBUTED AREAS ON WHICH CONSTRUCTION ACTIVITIES HAVE CEASED (TEMPORARILY OR PERMANENTLY) SHALL BE STABILIZED WITHIN 14 DAYS UNLESS ACTIVITY RESUMES WITHIN 21 DAYS. SEEDING DOES NOT CONSTITUTE AS STABILIZATION.

DESIGN

INTERIM REVIEW
DOCUMENT INCOMPLETE. NOT INTENDED FOR PERMIT, BIDDING OR CONSTRUCTION.
ENGINEER: TYLER PAYNE DUBE
P.E. SERIAL NO: 118612
DATE: 1/9/2020

APPROVAL

INTERIM REVIEW
DOCUMENT INCOMPLETE. NOT INTENDED FOR PERMIT, BIDDING OR CONSTRUCTION.
ENGINEER: JOHN A. TYLER
P.E. SERIAL NO: 105193
DATE: 1/9/2020

0 10 20 30 60

SCALE: PLAN 1"= 30'

REV.NO.	DATE	DESCRIPTION	BY

PAPE-DAWSON ENGINEERS
SAN ANTONIO | AUSTIN | HOUSTON | FORT WORTH | DALLAS
2000 NW LOOP 410 | SAN ANTONIO, TX 78213 | 210.375.9000
TBPE FIRM REGISTRATION #470 | TBPLS FIRM REGISTRATION #10028800

City of New Braunfels

KLEIN RD PHASE 2

SW3P LAYOUT PHASE 2 STEP 2

SHEET 2 OF 18

DGN:	STATE	PROJECT NO.	ROADWAY
CHK DGN:	TEXAS	NB 18-026	KLEIN RD
DWG:	COUNTY	CITY	SHEET NO.
CHK DWG:	GUADALUPE	NEW BRAUNFELS	270

Plotted on: 1/9/2020

Design Filename: H:\Projects\510\30\03\Design\Civil\SW3P\Phase2\5103003sw3p2a02.dgn

Plotted on: 1/9/2020

Design Filename: H:\Projects\510\30\03\Design\Civil\SW3P\Phase2\5103003sw3p2a03.dgn

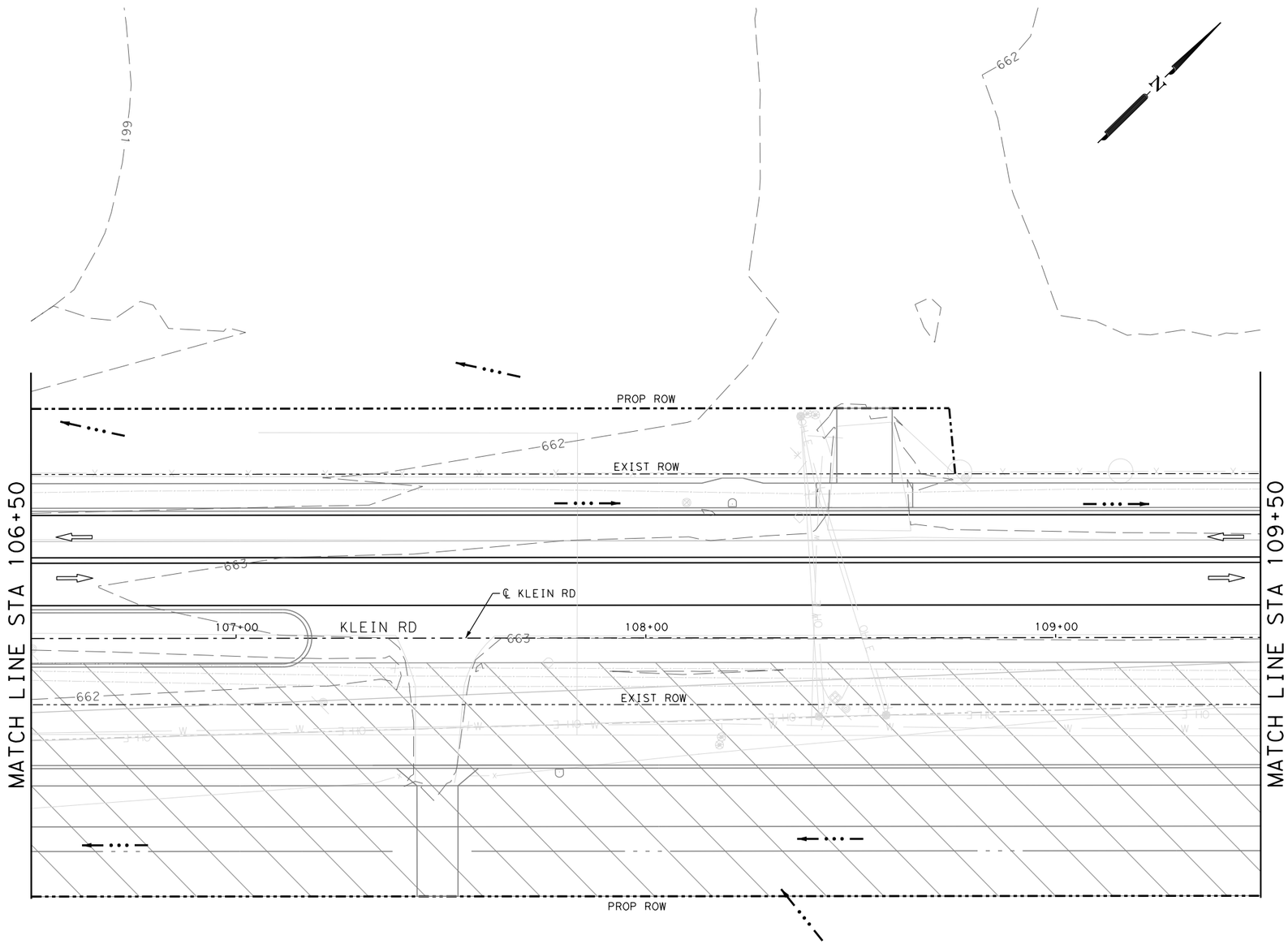

ITEM	DESCRIPTION	UNIT	QTY

LEGEND

- TRAFFIC FLOW ARROWS
- FLOW ARROW
- SCF — SEDIMENT CONTROL FENCE
- RFD2 — TY 2 ROCK FILTER DAM
- RFD3 — TY 3 ROCK FILTER DAM
- CONSTRUCTION EXIT
- CL-CI — EROSION CONTROL LOG
- CONSTRUCTION PHASE
- WETLAND AREA

DESIGN

INTERIM REVIEW

DOCUMENT INCOMPLETE. NOT INTENDED FOR PERMIT, BIDDING OR CONSTRUCTION.
ENGINEER: TYLER PAYNE DUBE
P.E. SERIAL NO: 118612
DATE: 1/9/2020

APPROVAL

INTERIM REVIEW

DOCUMENT INCOMPLETE. NOT INTENDED FOR PERMIT, BIDDING OR CONSTRUCTION.
ENGINEER: JOHN A. TYLER
P.E. SERIAL NO: 105193
DATE: 1/9/2020

0 10 20 30 60

SCALE: PLAN 1" = 30'

REV. NO.	DATE	DESCRIPTION	BY

NOTES:

1. THE MEASURES SHOWN ARE SUGGESTED PLACEMENTS OF SW3P ITEMS. THE ENGINEER MAY MODIFY AS FIELD CONDITIONS REQUIRE.
2. SW3P LAYOUTS CORRESPOND WITH TCP PHASING.
3. LOCATION OF CONSTRUCTION EXIT/ENTRANCE TO BE DETERMINED IN THE FIELD BY THE ENGINEER.
4. SEDIMENT CONTROL FENCE SHALL BE REPLACED BY CONTRACTOR AS NEEDED IN SUBSEQUENT PHASES OF CONSTRUCTION.
5. STAGING, STORAGE, AND SPOILS LOCATIONS ARE ONLY PERMITTED WITHIN THE CONSTRUCTION AREA.
6. PER TPDES REQUIREMENTS, DISTRIBUTED AREAS ON WHICH CONSTRUCTION ACTIVITIES HAVE CEASED (TEMPORARILY OR PERMANENTLY) SHALL BE STABILIZED WITHIN 14 DAYS UNLESS ACTIVITY RESUMES WITHIN 21 DAYS. SEEDING DOES NOT CONSTITUTE AS STABILIZATION.

PAPE-DAWSON ENGINEERS
SAN ANTONIO | AUSTIN | HOUSTON | FORT WORTH | DALLAS
2000 NW LOOP 410 | SAN ANTONIO, TX 78213 | 210.375.9000
TBPE FIRM REGISTRATION #470 | TBPLS FIRM REGISTRATION #10028800

City of New Braunfels

KLEIN RD PHASE 2

SW3P LAYOUT PHASE 2 STEP 2

SHEET 3 OF 18

DGN:	STATE	PROJECT NO.	ROADWAY
CHK DGN:	TEXAS	NB 18-026	KLEIN RD
DWG:	COUNTY	CITY	SHEET NO.
CHK DWG:	GUADALUPE	NEW BRAUNFELS	271

ITEM	DESCRIPTION	UNIT	QTY
0506-6041	BIODEG EROSN CONT LOGS (INSTL) (12")	LF	20
0506-6043	BIODEG EROSN CONT LOGS (REMOVE)	LF	20

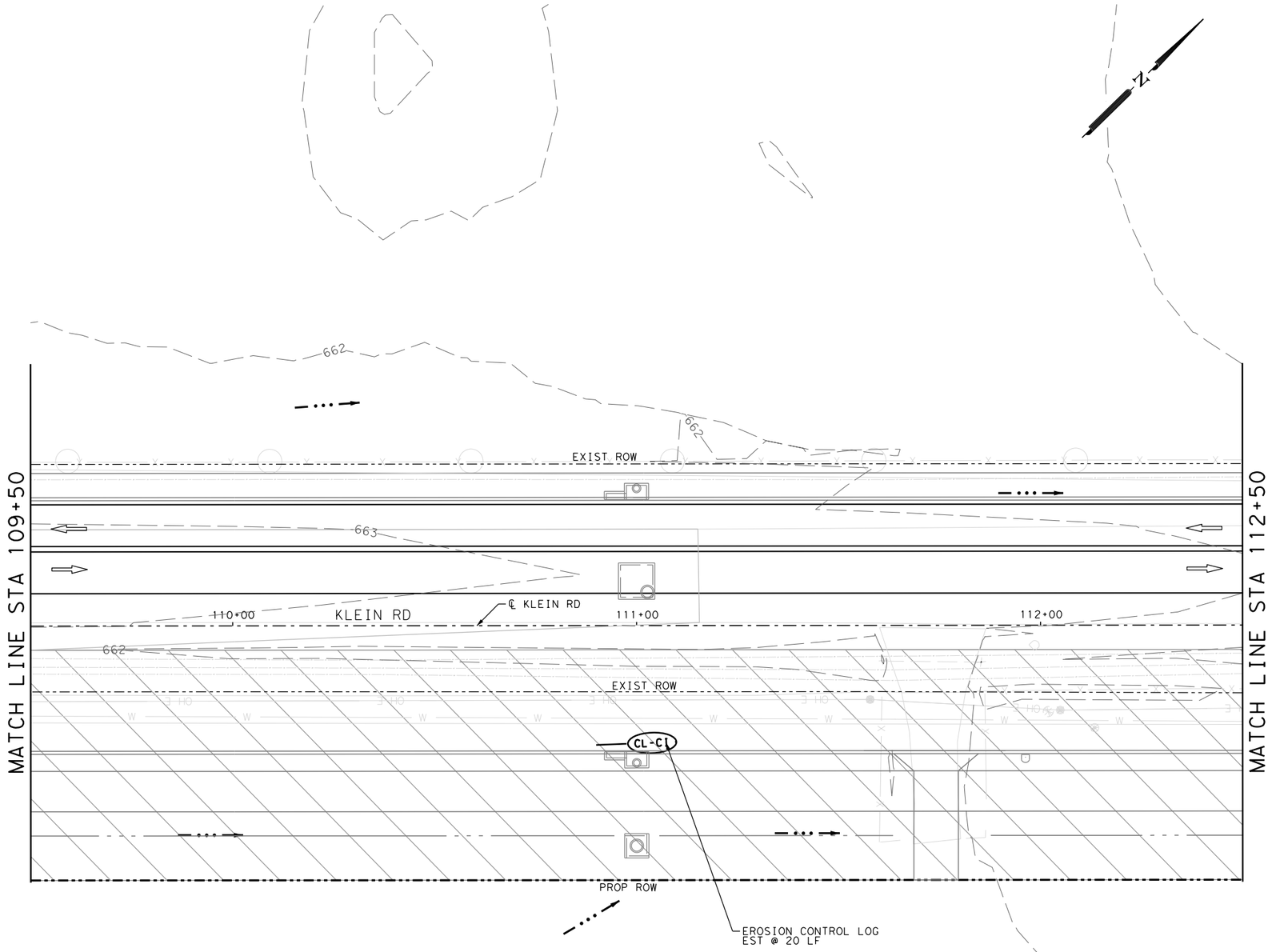

LEGEND

- TRAFFIC FLOW ARROWS
- FLOW ARROW
- SCF — SEDIMENT CONTROL FENCE
- RFD2 — TY 2 ROCK FILTER DAM
- RFD3 — TY 3 ROCK FILTER DAM
- CONSTRUCTION EXIT
- CL-C1 — EROSION CONTROL LOG
- CONSTRUCTION PHASE
- WETLAND AREA

DESIGN

INTERIM REVIEW

DOCUMENT INCOMPLETE. NOT INTENDED FOR PERMIT, BIDDING OR CONSTRUCTION.
ENGINEER: TYLER PAYNE DUBE
P.E. SERIAL NO: 118612
DATE: 1/9/2020

APPROVAL

INTERIM REVIEW

DOCUMENT INCOMPLETE. NOT INTENDED FOR PERMIT, BIDDING OR CONSTRUCTION.
ENGINEER: JOHN A. TYLER
P.E. SERIAL NO: 105193
DATE: 1/9/2020

0 10 20 30 60

SCALE: PLAN 1" = 30'

REV. NO.	DATE	DESCRIPTION	BY

PAPE-DAWSON ENGINEERS
SAN ANTONIO | AUSTIN | HOUSTON | FORT WORTH | DALLAS
2000 NW LOOP 410 | SAN ANTONIO, TX 78213 | 210.375.9000
TBPE FIRM REGISTRATION #470 | TBPLS FIRM REGISTRATION #10028800

City of New Braunfels

KLEIN RD PHASE 2

SW3P LAYOUT PHASE 2 STEP 2

SHEET 4 OF 18

DGN:	STATE	PROJECT NO.	ROADWAY
CHK DGN:	TEXAS	NB 18-026	KLEIN RD
DWG:	COUNTY	CITY	SHEET NO.
CHK DWG:	GUADALUPE	NEW BRAUNFELS	272

NOTES:

1. THE MEASURES SHOWN ARE SUGGESTED PLACEMENTS OF SW3P ITEMS. THE ENGINEER MAY MODIFY AS FIELD CONDITIONS REQUIRE.
2. SW3P LAYOUTS CORRESPOND WITH TCP PHASING.
3. LOCATION OF CONSTRUCTION EXIT/ENTRANCE TO BE DETERMINED IN THE FIELD BY THE ENGINEER.
4. SEDIMENT CONTROL FENCE SHALL BE REPLACED BY CONTRACTOR AS NEEDED IN SUBSEQUENT PHASES OF CONSTRUCTION.
5. STAGING, STORAGE, AND SPOILS LOCATIONS ARE ONLY PERMITTED WITHIN THE CONSTRUCTION AREA.
6. PER TPDES REQUIREMENTS, DISTRIBUTED AREAS ON WHICH CONSTRUCTION ACTIVITIES HAVE CEASED (TEMPORARILY OR PERMANENTLY) SHALL BE STABILIZED WITHIN 14 DAYS UNLESS ACTIVITY RESUMES WITHIN 21 DAYS. SEEDING DOES NOT CONSTITUTE AS STABILIZATION.

Plotted on: 1/9/2020

Design Filename: H:\Projects\510\30\03\Design\Civil\SW3P\Phase2\5103003sw3p2a04.dgn

Plotted on: 1/9/2020

ITEM	DESCRIPTION	UNIT	QTY
0506-6020	CONSTRUCTION EXITS (INSTALL) (TY 1)	SY	111
0506-6024	CONSTRUCTION EXITS (REMOVE)	SY	111
0506-6041	BIODEG EROSN CONT LOGS (INSTL) (12")	LF	20
0506-6043	BIODEG EROSN CONT LOGS (REMOVE)	LF	20

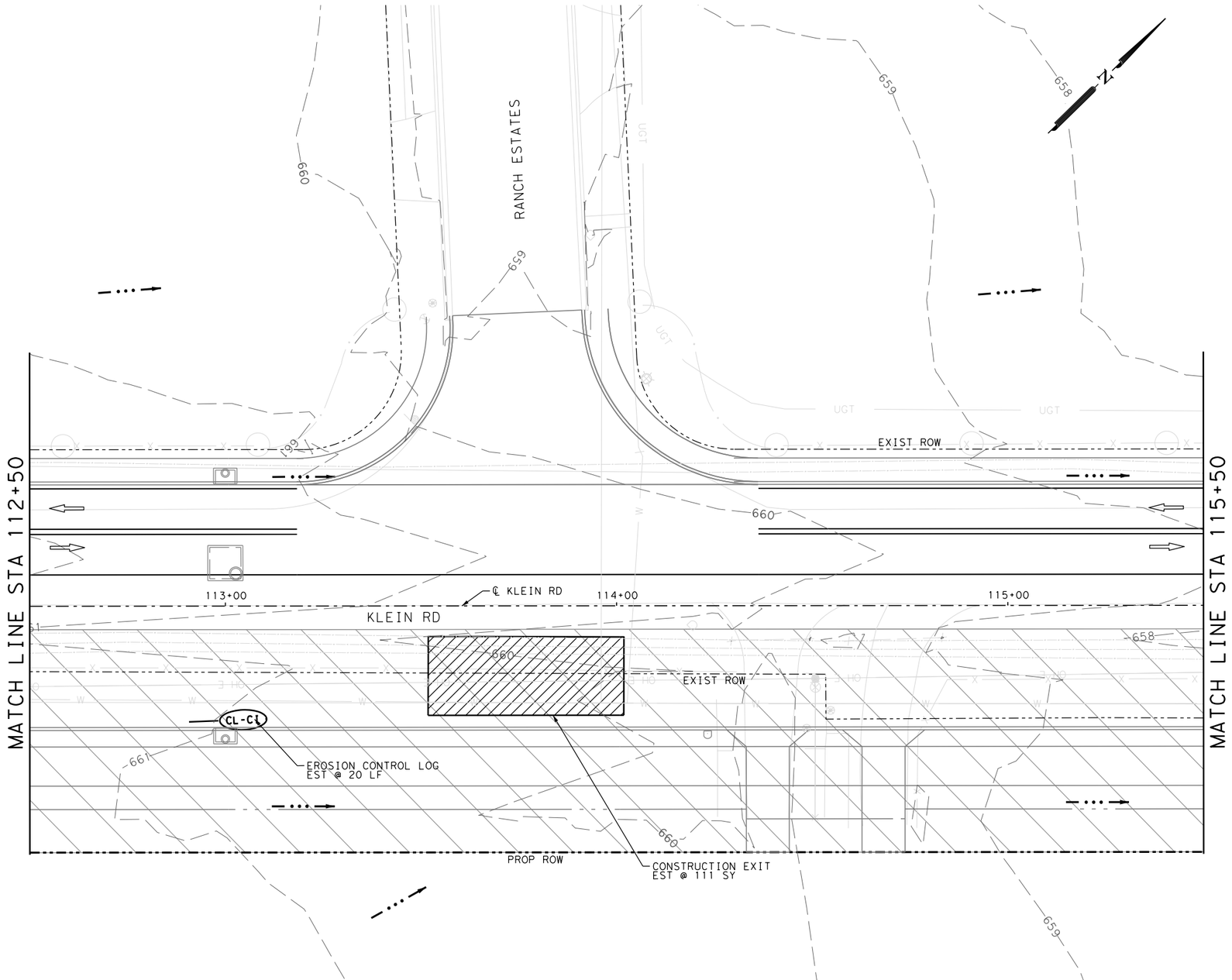

LEGEND

- TRAFFIC FLOW ARROWS
- FLOW ARROW
- SCF — SEDIMENT CONTROL FENCE
- RFD2 — TY 2 ROCK FILTER DAM
- RFD3 — TY 3 ROCK FILTER DAM
- CONSTRUCTION EXIT
- CL-C1 — EROSION CONTROL LOG
- CONSTRUCTION PHASE
- WETLAND AREA

DESIGN

INTERIM REVIEW
DOCUMENT INCOMPLETE. NOT INTENDED FOR PERMIT, BIDDING OR CONSTRUCTION.
ENGINEER: TYLER PAYNE DUBE
P.E. SERIAL NO: 118612
DATE: 1/9/2020

APPROVAL

INTERIM REVIEW
DOCUMENT INCOMPLETE. NOT INTENDED FOR PERMIT, BIDDING OR CONSTRUCTION.
ENGINEER: JOHN A. TYLER
P.E. SERIAL NO: 105193
DATE: 1/9/2020

0 10 20 30 60

SCALE: PLAN 1" = 30'

REV. NO.	DATE	DESCRIPTION	BY

PAPE-DAWSON ENGINEERS
SAN ANTONIO | AUSTIN | HOUSTON | FORT WORTH | DALLAS
2000 NW LOOP 410 | SAN ANTONIO, TX 78213 | 210.375.9000
TBPE FIRM REGISTRATION #470 | TBPLS FIRM REGISTRATION #10028800

City of New Braunfels

KLEIN RD PHASE 2

SW3P LAYOUT PHASE 2 STEP 2

SHEET 5 OF 18

DGN:	STATE	PROJECT NO.	ROADWAY
CHK DGN:	TEXAS	NB 18-026	KLEIN RD
DWG:	COUNTY	CITY	SHEET NO.
CHK DWG:	GUADALUPE	NEW BRAUNFELS	273

NOTES:

1. THE MEASURES SHOWN ARE SUGGESTED PLACEMENTS OF SW3P ITEMS. THE ENGINEER MAY MODIFY AS FIELD CONDITIONS REQUIRE.
2. SW3P LAYOUTS CORRESPOND WITH TCP PHASING.
3. LOCATION OF CONSTRUCTION EXIT/ENTRANCE TO BE DETERMINED IN THE FIELD BY THE ENGINEER.
4. SEDIMENT CONTROL FENCE SHALL BE REPLACED BY CONTRACTOR AS NEEDED IN SUBSEQUENT PHASES OF CONSTRUCTION.
5. STAGING, STORAGE, AND SPOILS LOCATIONS ARE ONLY PERMITTED WITHIN THE CONSTRUCTION AREA.
6. PER TPDES REQUIREMENTS, DISTRIBUTED AREAS ON WHICH CONSTRUCTION ACTIVITIES HAVE CEASED (TEMPORARILY OR PERMANENTLY) SHALL BE STABILIZED WITHIN 14 DAYS UNLESS ACTIVITY RESUMES WITHIN 21 DAYS. SEEDING DOES NOT CONSTITUTE AS STABILIZATION.

Design Filename: H:\Projects\510\30\03\Design\Civil\SW3P\Phase2\5103003sw3p2a05.dgn

ITEM	DESCRIPTION	UNIT	QTY
0506-6041	BIODEG EROSN CONT LOGS (INSTL) (12")	LF	20
0506-6043	BIODEG EROSN CONT LOGS (REMOVE)	LF	20

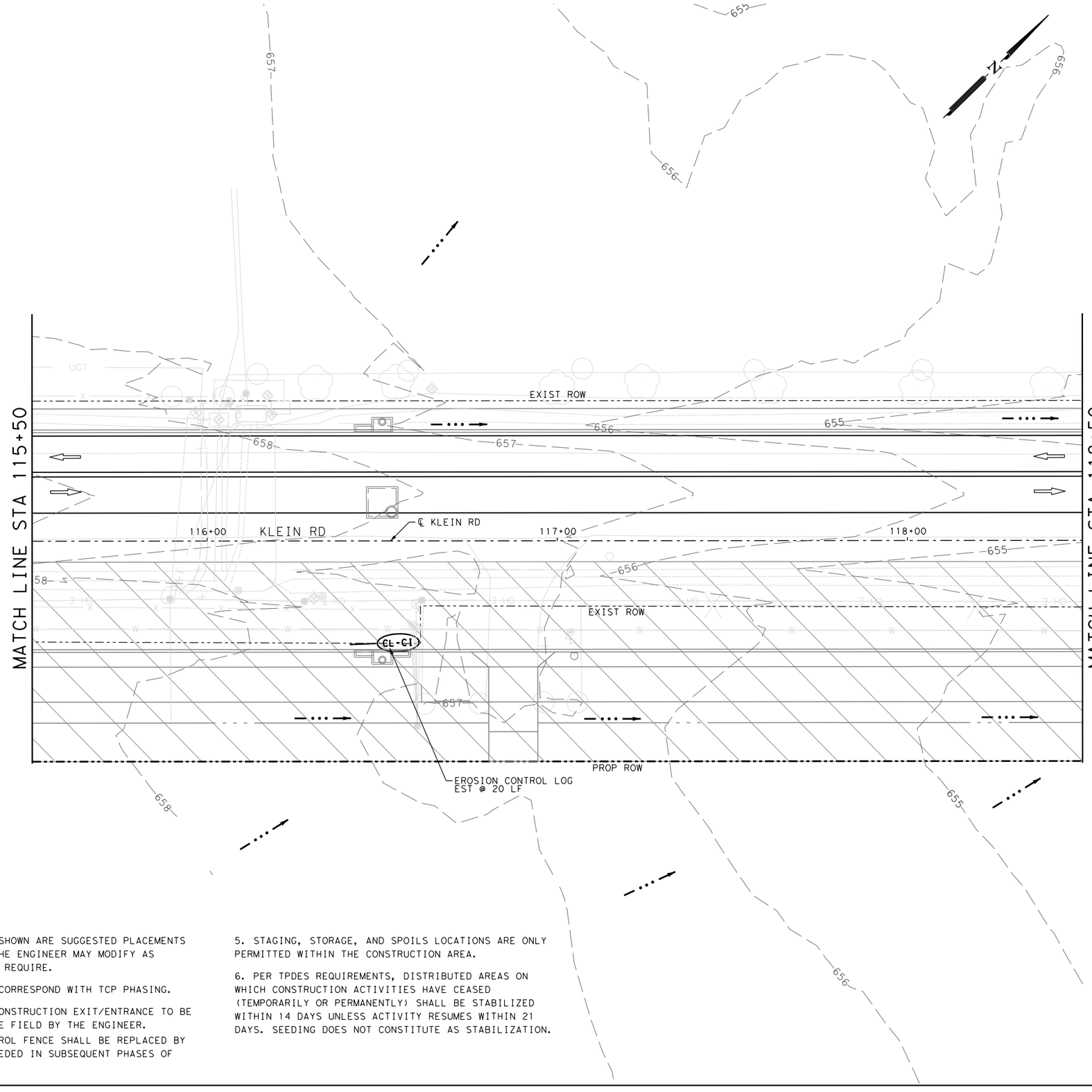

LEGEND

- TRAFFIC FLOW ARROWS
- FLOW ARROW
- SCF — SEDIMENT CONTROL FENCE
- RFD2 — TY 2 ROCK FILTER DAM
- RFD3 — TY 3 ROCK FILTER DAM
- CONSTRUCTION EXIT
- CL-CI — EROSION CONTROL LOG
- CONSTRUCTION PHASE
- WETLAND AREA

NOTES:

1. THE MEASURES SHOWN ARE SUGGESTED PLACEMENTS OF SW3P ITEMS. THE ENGINEER MAY MODIFY AS FIELD CONDITIONS REQUIRE.
2. SW3P LAYOUTS CORRESPOND WITH TCP PHASING.
3. LOCATION OF CONSTRUCTION EXIT/ENTRANCE TO BE DETERMINED IN THE FIELD BY THE ENGINEER.
4. SEDIMENT CONTROL FENCE SHALL BE REPLACED BY CONTRACTOR AS NEEDED IN SUBSEQUENT PHASES OF CONSTRUCTION.
5. STAGING, STORAGE, AND SPOILS LOCATIONS ARE ONLY PERMITTED WITHIN THE CONSTRUCTION AREA.
6. PER TPDES REQUIREMENTS, DISTRIBUTED AREAS ON WHICH CONSTRUCTION ACTIVITIES HAVE CEASED (TEMPORARILY OR PERMANENTLY) SHALL BE STABILIZED WITHIN 14 DAYS UNLESS ACTIVITY RESUMES WITHIN 21 DAYS. SEEDING DOES NOT CONSTITUTE AS STABILIZATION.

DESIGN

INTERIM REVIEW
DOCUMENT INCOMPLETE. NOT INTENDED FOR PERMIT, BIDDING OR CONSTRUCTION.
ENGINEER: TYLER PAYNE DUBE
P.E. SERIAL NO: 118612
DATE: 1/9/2020

APPROVAL

INTERIM REVIEW
DOCUMENT INCOMPLETE. NOT INTENDED FOR PERMIT, BIDDING OR CONSTRUCTION.
ENGINEER: JOHN A. TYLER
P.E. SERIAL NO: 105193
DATE: 1/9/2020

0 10 20 30 60

SCALE: PLAN 1" = 30'

REV. NO.	DATE	DESCRIPTION	BY

PAPE-DAWSON ENGINEERS
SAN ANTONIO | AUSTIN | HOUSTON | FORT WORTH | DALLAS
2000 NW LOOP 410 | SAN ANTONIO, TX 78213 | 210.375.9000
TBPE FIRM REGISTRATION #470 | TBPLS FIRM REGISTRATION #10028800

City of New Braunfels

KLEIN RD PHASE 2

SW3P LAYOUT PHASE 2 STEP 2

SHEET 6 OF 18

DGN:	STATE	PROJECT NO.	ROADWAY
CHK DGN:	TEXAS	NB 18-026	KLEIN RD
DWG:	COUNTY	CITY	SHEET NO.
CHK DWG:	GUADALUPE	NEW BRAUNFELS	274

Plotted on: 1/9/2020

Design Filename: H:\Projects\510\30\03\Design\Civil\SW3P\Phase2\5103003sw3p2A06.dgn

Plotted on: 1/9/2020

Design Filename: H:\Projects\510\30\03\Design\Civil\SW3P\Phase2\5103003sw3p2A07.dgn

ITEM	DESCRIPTION	UNIT	QTY
0506-6020	CONSTRUCTION EXITS (INSTALL) (TY 1)	SY	111
0506-6024	CONSTRUCTION EXITS (REMOVE)	SY	111
0506-6041	BIODEG EROSN CONT LOGS (INSTL) (12")	LF	110
0506-6043	BIODEG EROSN CONT LOGS (REMOVE)	LF	110

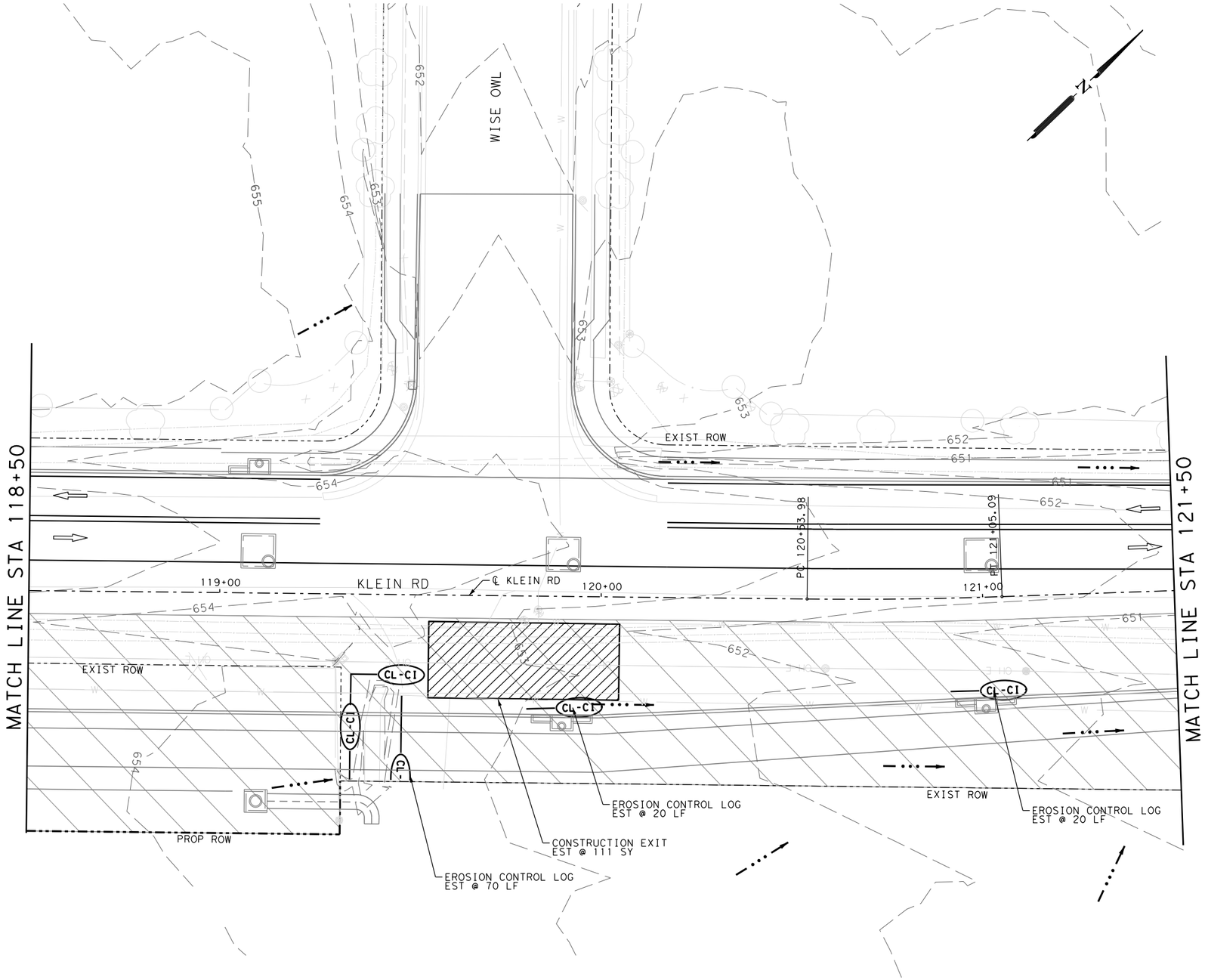

LEGEND

- TRAFFIC FLOW ARROWS
- FLOW ARROW
- SCF — SEDIMENT CONTROL FENCE
- RFD2 — TY 2 ROCK FILTER DAM
- RFD3 — TY 3 ROCK FILTER DAM
- CONSTRUCTION EXIT
- CL-C1 — EROSION CONTROL LOG
- CONSTRUCTION PHASE
- WETLAND AREA

DESIGN

INTERIM REVIEW

DOCUMENT INCOMPLETE. NOT INTENDED FOR PERMIT, BIDDING OR CONSTRUCTION.
ENGINEER: TYLER PAYNE DUBE
P.E. SERIAL NO: 118612
DATE: 1/9/2020

APPROVAL

INTERIM REVIEW

DOCUMENT INCOMPLETE. NOT INTENDED FOR PERMIT, BIDDING OR CONSTRUCTION.
ENGINEER: JOHN A. TYLER
P.E. SERIAL NO: 105193
DATE: 1/9/2020

0 10 20 30 60

SCALE: PLAN 1" = 30'

REV. NO.	DATE	DESCRIPTION	BY

PAPE-DAWSON ENGINEERS
SAN ANTONIO | AUSTIN | HOUSTON | FORT WORTH | DALLAS
2000 NW LOOP 410 | SAN ANTONIO, TX 78213 | 210.375.9000
TBPE FIRM REGISTRATION #470 | TBPLS FIRM REGISTRATION #10028800

City of New Braunfels

KLEIN RD PHASE 2

SW3P LAYOUT PHASE 2 STEP 2

SHEET 7 OF 18

DGN:	STATE	PROJECT NO.	ROADWAY
CHK DGN:	TEXAS	NB 18-026	KLEIN RD
DWG:	COUNTY	CITY	SHEET NO.
CHK DWG:	GUADALUPE	NEW BRAUNFELS	275

NOTES:

1. THE MEASURES SHOWN ARE SUGGESTED PLACEMENTS OF SW3P ITEMS. THE ENGINEER MAY MODIFY AS FIELD CONDITIONS REQUIRE.
2. SW3P LAYOUTS CORRESPOND WITH TCP PHASING.
3. LOCATION OF CONSTRUCTION EXIT/ENTRANCE TO BE DETERMINED IN THE FIELD BY THE ENGINEER.
4. SEDIMENT CONTROL FENCE SHALL BE REPLACED BY CONTRACTOR AS NEEDED IN SUBSEQUENT PHASES OF CONSTRUCTION.
5. STAGING, STORAGE, AND SPOILS LOCATIONS ARE ONLY PERMITTED WITHIN THE CONSTRUCTION AREA.
6. PER TPDES REQUIREMENTS, DISTRIBUTED AREAS ON WHICH CONSTRUCTION ACTIVITIES HAVE CEASED (TEMPORARILY OR PERMANENTLY) SHALL BE STABILIZED WITHIN 14 DAYS UNLESS ACTIVITY RESUMES WITHIN 21 DAYS. SEEDING DOES NOT CONSTITUTE AS STABILIZATION.

ITEM	DESCRIPTION	UNIT	QTY
0506-6020	CONSTRUCTION EXITS (INSTALL) (TY 1)	SY	78
0506-6024	CONSTRUCTION EXITS (REMOVE)	SY	78
0506-6041	BIODEG EROSN CONT LOGS (INSTL) (12")	LF	87
0506-6043	BIODEG EROSN CONT LOGS (REMOVE)	LF	87

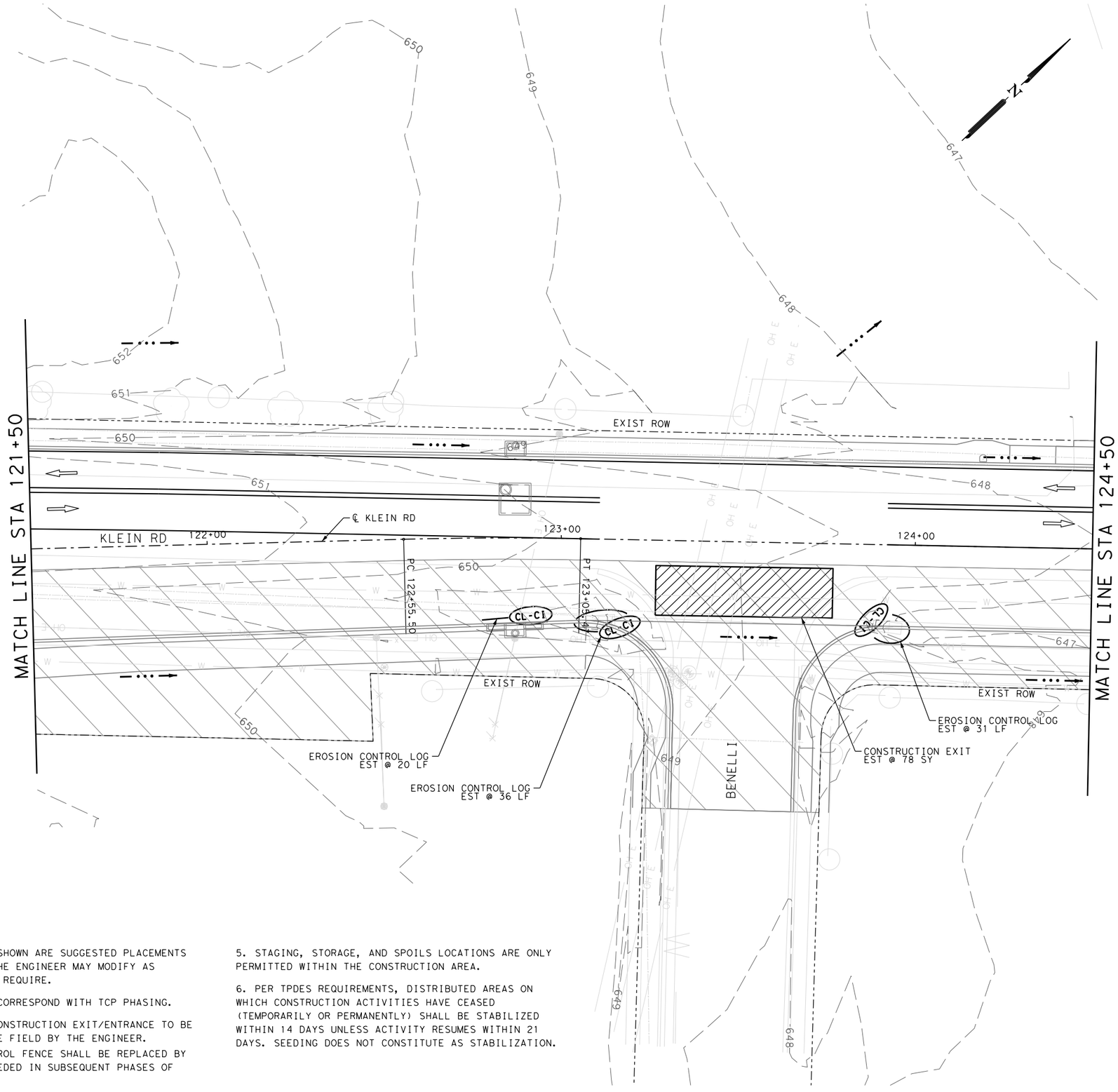

LEGEND

- TRAFFIC FLOW ARROWS
- FLOW ARROW
- SCF — SEDIMENT CONTROL FENCE
- RFD2 — TY 2 ROCK FILTER DAM
- RFD3 — TY 3 ROCK FILTER DAM
- CONSTRUCTION EXIT
- CL-CI — EROSION CONTROL LOG
- CONSTRUCTION PHASE
- WETLAND AREA

NOTES:

1. THE MEASURES SHOWN ARE SUGGESTED PLACEMENTS OF SW3P ITEMS. THE ENGINEER MAY MODIFY AS FIELD CONDITIONS REQUIRE.
2. SW3P LAYOUTS CORRESPOND WITH TCP PHASING.
3. LOCATION OF CONSTRUCTION EXIT/ENTRANCE TO BE DETERMINED IN THE FIELD BY THE ENGINEER.
4. SEDIMENT CONTROL FENCE SHALL BE REPLACED BY CONTRACTOR AS NEEDED IN SUBSEQUENT PHASES OF CONSTRUCTION.
5. STAGING, STORAGE, AND SPOILS LOCATIONS ARE ONLY PERMITTED WITHIN THE CONSTRUCTION AREA.
6. PER TPDES REQUIREMENTS, DISTRIBUTED AREAS ON WHICH CONSTRUCTION ACTIVITIES HAVE CEASED (TEMPORARILY OR PERMANENTLY) SHALL BE STABILIZED WITHIN 14 DAYS UNLESS ACTIVITY RESUMES WITHIN 21 DAYS. SEEDING DOES NOT CONSTITUTE AS STABILIZATION.

DESIGN

INTERIM REVIEW
DOCUMENT INCOMPLETE. NOT INTENDED FOR PERMIT, BIDDING OR CONSTRUCTION.
ENGINEER: TYLER PAYNE DUBE
P.E. SERIAL NO: 118612
DATE: 1/9/2020

APPROVAL

INTERIM REVIEW
DOCUMENT INCOMPLETE. NOT INTENDED FOR PERMIT, BIDDING OR CONSTRUCTION.
ENGINEER: JOHN A. TYLER
P.E. SERIAL NO: 105193
DATE: 1/9/2020

0 10 20 30 60

SCALE: PLAN 1"= 30'

REV. NO.	DATE	DESCRIPTION	BY

PAPE-DAWSON ENGINEERS
SAN ANTONIO | AUSTIN | HOUSTON | FORT WORTH | DALLAS
2000 NW LOOP 410 | SAN ANTONIO, TX 78213 | 210.375.9000
TBPE FIRM REGISTRATION #470 | TBPLS FIRM REGISTRATION #10028800

City of New Braunfels

KLEIN RD PHASE 2

SW3P LAYOUT PHASE 2 STEP 2

SHEET 8 OF 18

DGN:	STATE	PROJECT NO.	ROADWAY
CHK DGN:	TEXAS	NB 18-026	KLEIN RD
DWG:	COUNTY	CITY	SHEET NO.
CHK DWG:	GUADALUPE	NEW BRAUNFELS	276

Plotted on: 1/9/2020

Design Filename: H:\Projects\510\30\03\Design\Civil\SW3P\Phase2\5103003sw3p2408.dgn

ITEM	DESCRIPTION	UNIT	QTY
0506-6020	CONSTRUCTION EXITS (INSTALL) (TY 1)	SY	39
0506-6024	CONSTRUCTION EXITS (REMOVE)	SY	39
0506-6041	BIODEG EROSN CONT LOGS (INSTL) (12")	LF	20
0506-6043	BIODEG EROSN CONT LOGS (REMOVE)	LF	20

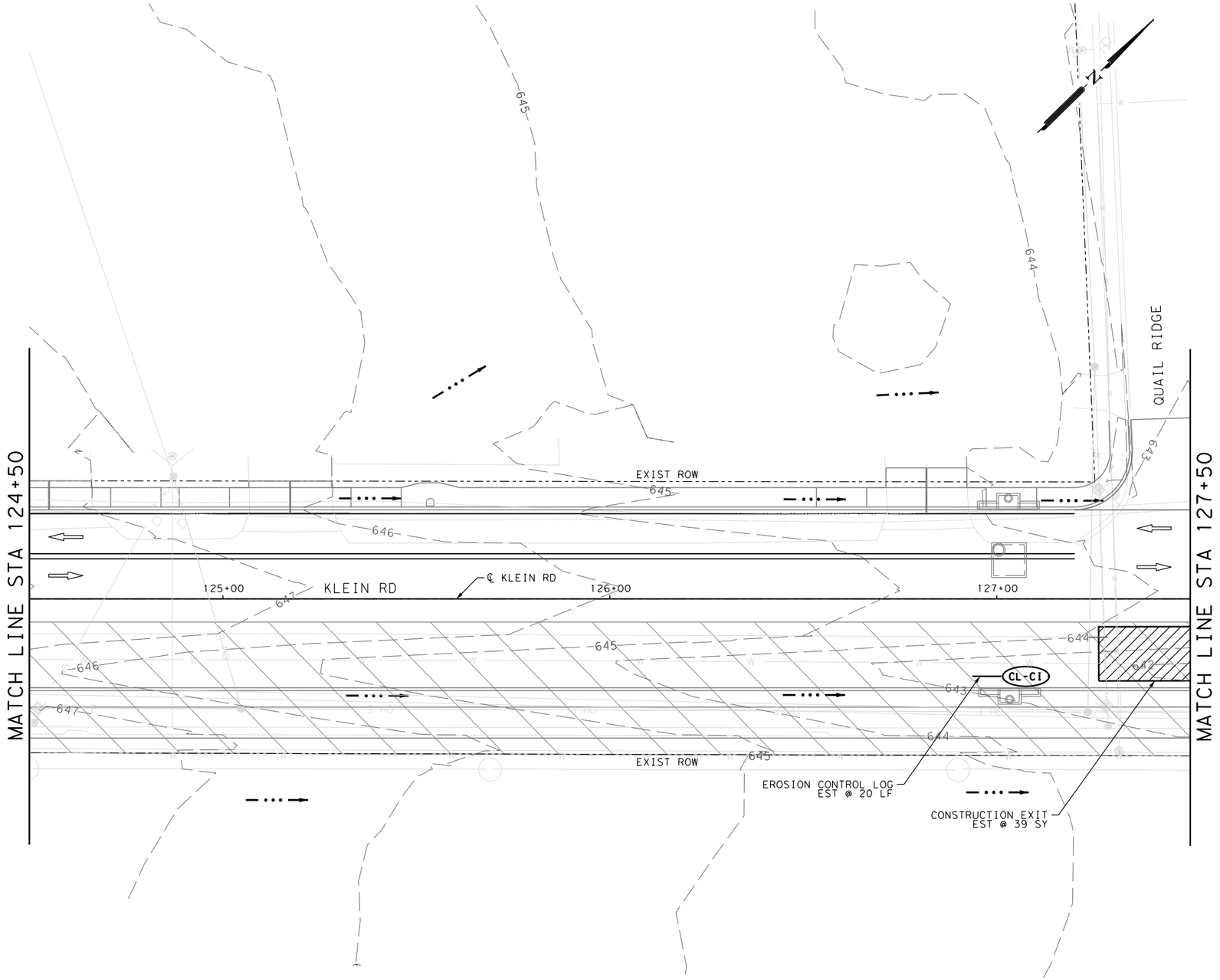

LEGEND

- TRAFFIC FLOW ARROWS
- FLOW ARROW
- SCF — SEDIMENT CONTROL FENCE
- RFD2 — TY 2 ROCK FILTER DAM
- RFD3 — TY 3 ROCK FILTER DAM
- CONSTRUCTION EXIT
- CL-CI — EROSION CONTROL LOG
- CONSTRUCTION PHASE
- WETLAND AREA

DESIGN

INTERIM REVIEW

DOCUMENT INCOMPLETE. NOT INTENDED FOR PERMIT, BIDDING OR CONSTRUCTION.
ENGINEER: TYLER PAYNE DUBE
P.E. SERIAL NO: 118612
DATE: 1/9/2020

APPROVAL

INTERIM REVIEW

DOCUMENT INCOMPLETE. NOT INTENDED FOR PERMIT, BIDDING OR CONSTRUCTION.
ENGINEER: JOHN A. TYLER
P.E. SERIAL NO: 105193
DATE: 1/9/2020

0 10 20 30 60

SCALE: PLAN 1"= 30'

REV. NO.	DATE	DESCRIPTION	BY

PAPE-DAWSON ENGINEERS
SAN ANTONIO | AUSTIN | HOUSTON | FORT WORTH | DALLAS
2000 NW LOOP 410 | SAN ANTONIO, TX 78213 | 210.375.9000
TBPE FIRM REGISTRATION #470 | TBPLS FIRM REGISTRATION #10028800

City of New Braunfels

KLEIN RD PHASE 2

SW3P LAYOUT PHASE 2 STEP 2

SHEET 9 OF 18

DGN:	STATE	PROJECT NO.	ROADWAY
CHK DGN:	TEXAS	NB 18-026	KLEIN RD
DWG:	COUNTY	CITY	SHEET NO.
CHK DWG:	GUADALUPE	NEW BRAUNFELS	277

NOTES:

1. THE MEASURES SHOWN ARE SUGGESTED PLACEMENTS OF SW3P ITEMS. THE ENGINEER MAY MODIFY AS FIELD CONDITIONS REQUIRE.
2. SW3P LAYOUTS CORRESPOND WITH TCP PHASING.
3. LOCATION OF CONSTRUCTION EXIT/ENTRANCE TO BE DETERMINED IN THE FIELD BY THE ENGINEER.
4. SEDIMENT CONTROL FENCE SHALL BE REPLACED BY CONTRACTOR AS NEEDED IN SUBSEQUENT PHASES OF CONSTRUCTION.
5. STAGING, STORAGE, AND SPOILS LOCATIONS ARE ONLY PERMITTED WITHIN THE CONSTRUCTION AREA.
6. PER TPDES REQUIREMENTS, DISTRIBUTED AREAS ON WHICH CONSTRUCTION ACTIVITIES HAVE CEASED (TEMPORARILY OR PERMANENTLY) SHALL BE STABILIZED WITHIN 14 DAYS UNLESS ACTIVITY RESUMES WITHIN 21 DAYS. SEEDING DOES NOT CONSTITUTE AS STABILIZATION.

Plotted on: 1/9/2020

Design Filename: H:\Projects\510\30\03\Design\Civil\SW3P\Phase2\5103003sw3p2A09.dgn

ITEM	DESCRIPTION	UNIT	QTY
0506-6020	CONSTRUCTION EXITS (INSTALL) (TY 1)	SY	39
0506-6024	CONSTRUCTION EXITS (REMOVE)	SY	39

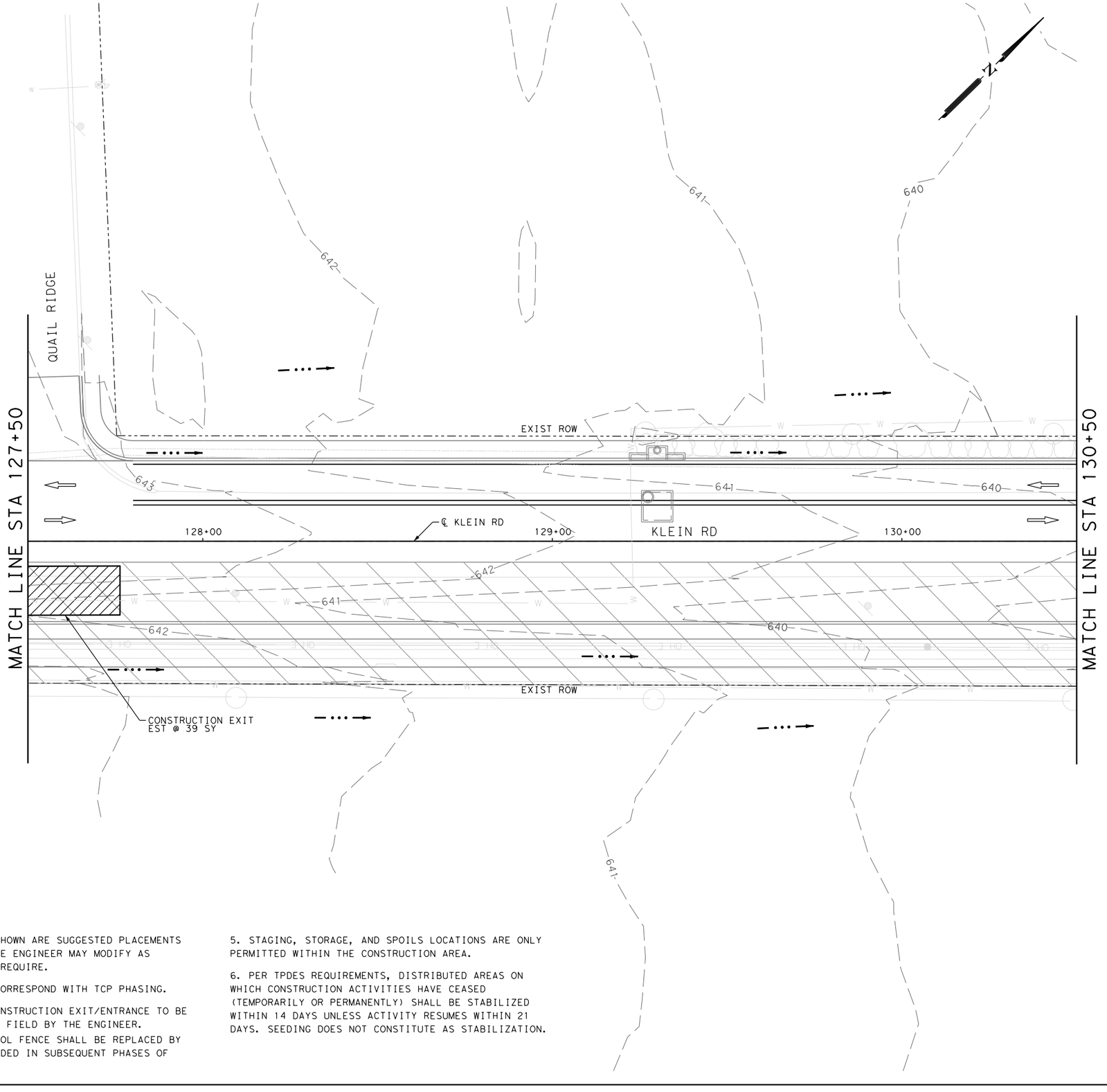

LEGEND

- TRAFFIC FLOW ARROWS
- FLOW ARROW
- SCF — SEDIMENT CONTROL FENCE
- RFD2 — TY 2 ROCK FILTER DAM
- RFD3 — TY 3 ROCK FILTER DAM
- CONSTRUCTION EXIT
- CL-CI — EROSION CONTROL LOG
- CONSTRUCTION PHASE
- WETLAND AREA

DESIGN

INTERIM REVIEW

DOCUMENT INCOMPLETE. NOT INTENDED FOR PERMIT, BIDDING OR CONSTRUCTION.
ENGINEER: TYLER PAYNE DUBE
P.E. SERIAL NO: 118612
DATE: 1/9/2020

APPROVAL

INTERIM REVIEW

DOCUMENT INCOMPLETE. NOT INTENDED FOR PERMIT, BIDDING OR CONSTRUCTION.
ENGINEER: JOHN A. TYLER
P.E. SERIAL NO: 105193
DATE: 1/9/2020

0 10 20 30 60

SCALE: PLAN 1" = 30'

REV. NO.	DATE	DESCRIPTION	BY

PAPE-DAWSON ENGINEERS
SAN ANTONIO | AUSTIN | HOUSTON | FORT WORTH | DALLAS
2000 NW LOOP 410 | SAN ANTONIO, TX 78213 | 210.375.9000
TBPE FIRM REGISTRATION #470 | TBPLS FIRM REGISTRATION #10028800

City of New Braunfels

KLEIN RD PHASE 2

SW3P LAYOUT PHASE 2 STEP 2

SHEET 10 OF 18

DGN:	STATE	PROJECT NO.	ROADWAY
CHK DGN:	TEXAS	NB 18-026	KLEIN RD
DWG:	COUNTY	CITY	SHEET NO.
CHK DWG:	GUADALUPE	NEW BRAUNFELS	278

NOTES:

1. THE MEASURES SHOWN ARE SUGGESTED PLACEMENTS OF SW3P ITEMS. THE ENGINEER MAY MODIFY AS FIELD CONDITIONS REQUIRE.
2. SW3P LAYOUTS CORRESPOND WITH TCP PHASING.
3. LOCATION OF CONSTRUCTION EXIT/ENTRANCE TO BE DETERMINED IN THE FIELD BY THE ENGINEER.
4. SEDIMENT CONTROL FENCE SHALL BE REPLACED BY CONTRACTOR AS NEEDED IN SUBSEQUENT PHASES OF CONSTRUCTION.
5. STAGING, STORAGE, AND SPOILS LOCATIONS ARE ONLY PERMITTED WITHIN THE CONSTRUCTION AREA.
6. PER TPDES REQUIREMENTS, DISTRIBUTED AREAS ON WHICH CONSTRUCTION ACTIVITIES HAVE CEASED (TEMPORARILY OR PERMANENTLY) SHALL BE STABILIZED WITHIN 14 DAYS UNLESS ACTIVITY RESUMES WITHIN 21 DAYS. SEEDING DOES NOT CONSTITUTE AS STABILIZATION.

Plotted on: 1/9/2020

Design Filename: H:\Projects\510\30\03\Design\Civil\SW3P\Phase2\5103003sw3p2A10.dgn

ITEM	DESCRIPTION	UNIT	QTY
0506-6020	CONSTRUCTION EXITS (INSTALL) (TY 1)	SY	78
0506-6024	CONSTRUCTION EXITS (REMOVE)	SY	78
0506-6041	BIODEG EROSN CONT LOGS (INSTL) (12")	LF	20
0506-6043	BIODEG EROSN CONT LOGS (REMOVE)	LF	20

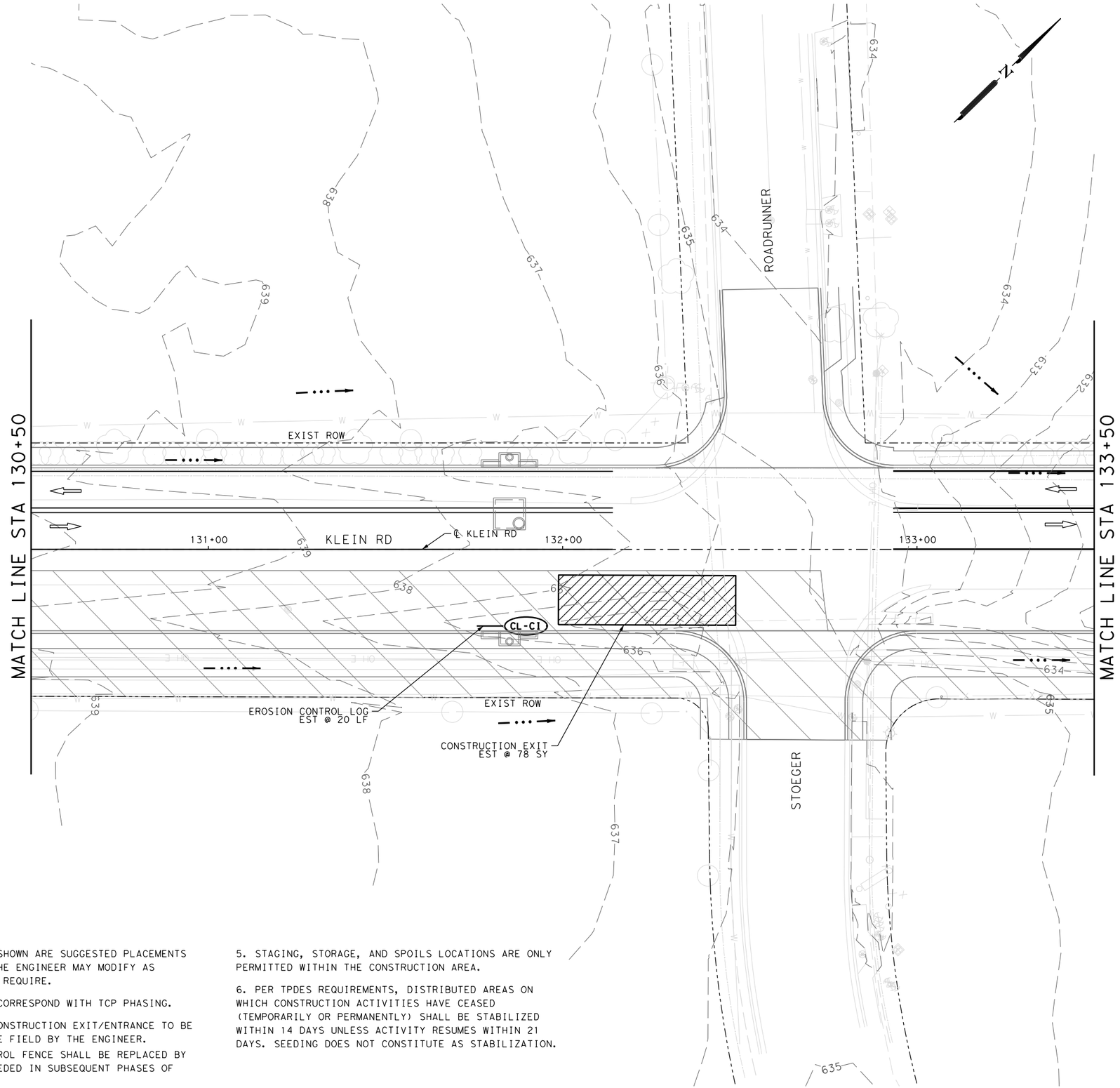

LEGEND

- TRAFFIC FLOW ARROWS
- FLOW ARROW
- SCF — SEDIMENT CONTROL FENCE
- RFD2 — TY 2 ROCK FILTER DAM
- RFD3 — TY 3 ROCK FILTER DAM
- CONSTRUCTION EXIT
- CL-CI — EROSION CONTROL LOG
- CONSTRUCTION PHASE
- WETLAND AREA

DESIGN

INTERIM REVIEW
DOCUMENT INCOMPLETE. NOT INTENDED FOR PERMIT, BIDDING OR CONSTRUCTION.
ENGINEER: TYLER PAYNE DUBE
P.E. SERIAL NO: 118612
DATE: 1/9/2020

APPROVAL

INTERIM REVIEW
DOCUMENT INCOMPLETE. NOT INTENDED FOR PERMIT, BIDDING OR CONSTRUCTION.
ENGINEER: JOHN A. TYLER
P.E. SERIAL NO: 105193
DATE: 1/9/2020

0 10 20 30 60

SCALE: PLAN 1"= 30'

NOTES:

1. THE MEASURES SHOWN ARE SUGGESTED PLACEMENTS OF SW3P ITEMS. THE ENGINEER MAY MODIFY AS FIELD CONDITIONS REQUIRE.
2. SW3P LAYOUTS CORRESPOND WITH TCP PHASING.
3. LOCATION OF CONSTRUCTION EXIT/ENTRANCE TO BE DETERMINED IN THE FIELD BY THE ENGINEER.
4. SEDIMENT CONTROL FENCE SHALL BE REPLACED BY CONTRACTOR AS NEEDED IN SUBSEQUENT PHASES OF CONSTRUCTION.
5. STAGING, STORAGE, AND SPOILS LOCATIONS ARE ONLY PERMITTED WITHIN THE CONSTRUCTION AREA.
6. PER TPDES REQUIREMENTS, DISTRIBUTED AREAS ON WHICH CONSTRUCTION ACTIVITIES HAVE CEASED (TEMPORARILY OR PERMANENTLY) SHALL BE STABILIZED WITHIN 14 DAYS UNLESS ACTIVITY RESUMES WITHIN 21 DAYS. SEEDING DOES NOT CONSTITUTE AS STABILIZATION.

REV. NO.	DATE	DESCRIPTION	BY

PAPE-DAWSON ENGINEERS
SAN ANTONIO | AUSTIN | HOUSTON | FORT WORTH | DALLAS
2000 NW LOOP 410 | SAN ANTONIO, TX 78213 | 210.375.9000
TBPE FIRM REGISTRATION #470 | TBPLS FIRM REGISTRATION #10028800

City of New Braunfels

KLEIN RD PHASE 2

SW3P LAYOUT PHASE 2 STEP 2

SHEET 11 OF 18

DGN:	STATE	PROJECT NO.	ROADWAY
CHK DGN:	TEXAS	NB 18-026	KLEIN RD
DWG:	COUNTY	CITY	SHEET NO.
CHK DWG:	GUADALUPE	NEW BRAUNFELS	279

Plotted on: 1/9/2020

Design Filename: H:\Projects\510\30\03\Design\Civil\SW3P\Phase2\5103003sw3p2A11.dgn

Plotted on: 1/9/2020

Design Filename: H:\Projects\510\30\03\Design\Civil\SW3P\Phase2\5103003sw3p2a12.dgn

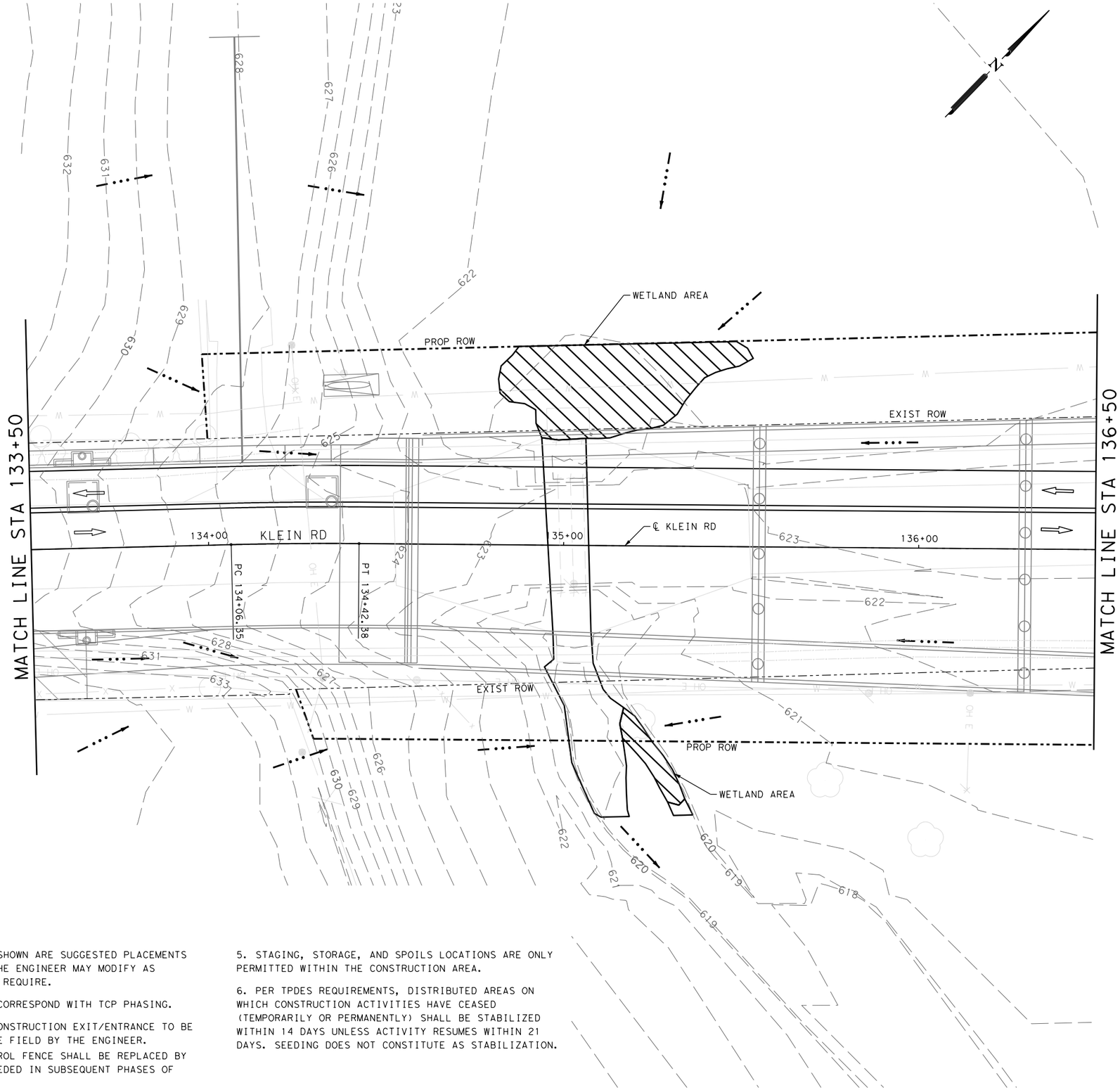

ITEM	DESCRIPTION	UNIT	QTY

LEGEND

- TRAFFIC FLOW ARROWS
- FLOW ARROW
- SCF — SEDIMENT CONTROL FENCE
- RFD2 — TY 2 ROCK FILTER DAM
- RFD3 — TY 3 ROCK FILTER DAM
- CONSTRUCTION EXIT
- CL-CI — EROSION CONTROL LOG
- CONSTRUCTION PHASE
- WETLAND AREA

DESIGN

INTERIM REVIEW

DOCUMENT INCOMPLETE. NOT INTENDED FOR PERMIT, BIDDING OR CONSTRUCTION.
ENGINEER: TYLER PAYNE DUBE
P.E. SERIAL NO: 118612
DATE: 1/9/2020

APPROVAL

INTERIM REVIEW

DOCUMENT INCOMPLETE. NOT INTENDED FOR PERMIT, BIDDING OR CONSTRUCTION.
ENGINEER: JOHN A. TYLER
P.E. SERIAL NO: 105193
DATE: 1/9/2020

0 10 20 30 60

SCALE: PLAN 1"= 30'

REV. NO.	DATE	DESCRIPTION	BY

PAPE-DAWSON ENGINEERS
SAN ANTONIO | AUSTIN | HOUSTON | FORT WORTH | DALLAS
2000 NW LOOP 410 | SAN ANTONIO, TX 78213 | 210.375.9000
TBPE FIRM REGISTRATION #470 | TBPLS FIRM REGISTRATION #10028800

City of New Braunfels

KLEIN RD PHASE 2

SW3P LAYOUT PHASE 2 STEP 2

SHEET 12 OF 18

DGN:	STATE	PROJECT NO.	ROADWAY
CHK DGN:	TEXAS	NB 18-026	KLEIN RD
DWG:	COUNTY	CITY	SHEET NO.
CHK DWG:	GUADALUPE	NEW BRAUNFELS	280

NOTES:

1. THE MEASURES SHOWN ARE SUGGESTED PLACEMENTS OF SW3P ITEMS. THE ENGINEER MAY MODIFY AS FIELD CONDITIONS REQUIRE.
2. SW3P LAYOUTS CORRESPOND WITH TCP PHASING.
3. LOCATION OF CONSTRUCTION EXIT/ENTRANCE TO BE DETERMINED IN THE FIELD BY THE ENGINEER.
4. SEDIMENT CONTROL FENCE SHALL BE REPLACED BY CONTRACTOR AS NEEDED IN SUBSEQUENT PHASES OF CONSTRUCTION.
5. STAGING, STORAGE, AND SPOILS LOCATIONS ARE ONLY PERMITTED WITHIN THE CONSTRUCTION AREA.
6. PER TPDES REQUIREMENTS, DISTRIBUTED AREAS ON WHICH CONSTRUCTION ACTIVITIES HAVE CEASED (TEMPORARILY OR PERMANENTLY) SHALL BE STABILIZED WITHIN 14 DAYS UNLESS ACTIVITY RESUMES WITHIN 21 DAYS. SEEDING DOES NOT CONSTITUTE AS STABILIZATION.

Plotted on: 1/9/2020

Design Filename: H:\Projects\510\30\03\Design\Civil\SW3P\Phase2\5103003sw3p2a13.dgn

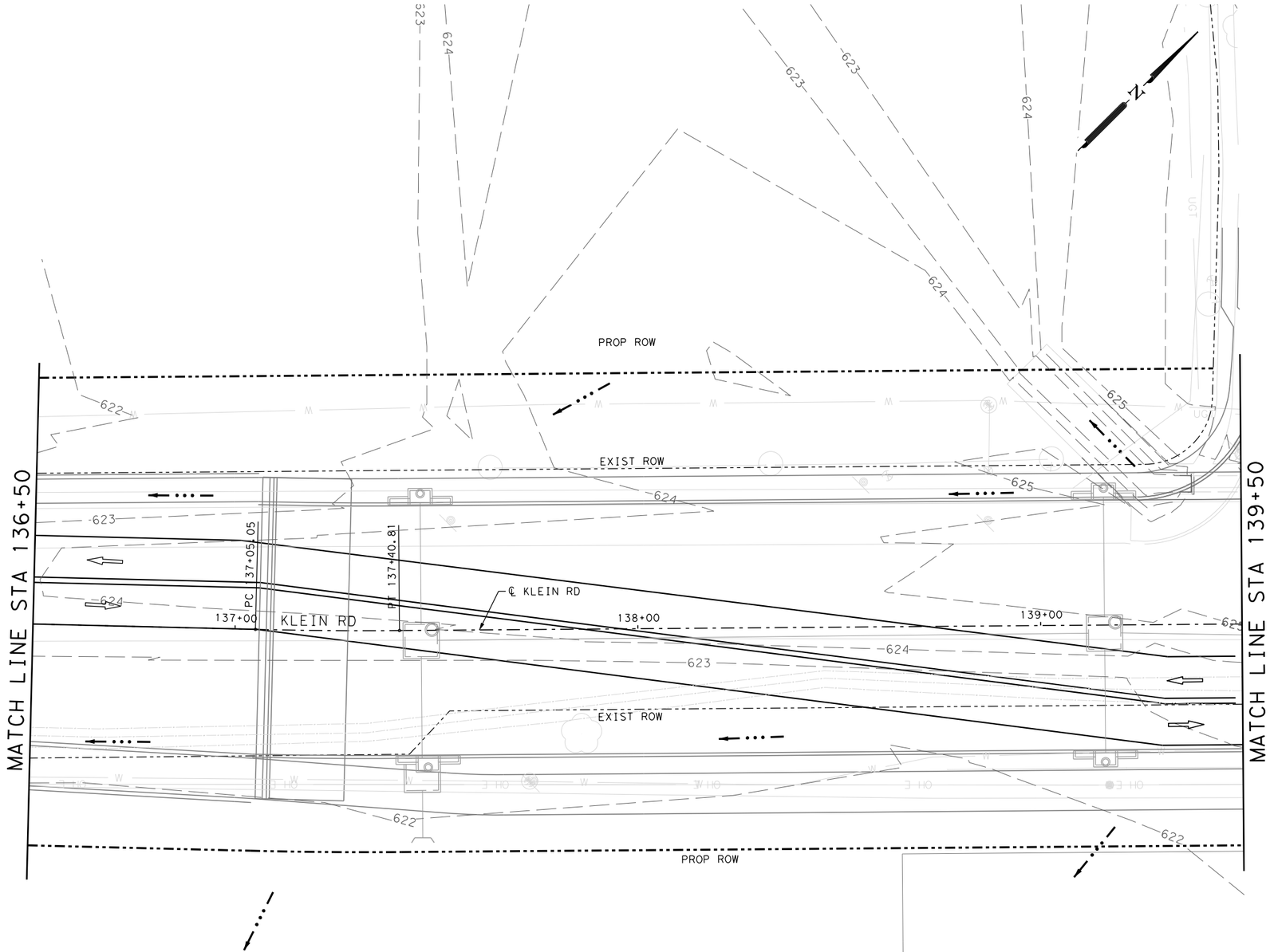

NOTES:

1. THE MEASURES SHOWN ARE SUGGESTED PLACEMENTS OF SW3P ITEMS. THE ENGINEER MAY MODIFY AS FIELD CONDITIONS REQUIRE.
2. SW3P LAYOUTS CORRESPOND WITH TCP PHASING.
3. LOCATION OF CONSTRUCTION EXIT/ENTRANCE TO BE DETERMINED IN THE FIELD BY THE ENGINEER.
4. SEDIMENT CONTROL FENCE SHALL BE REPLACED BY CONTRACTOR AS NEEDED IN SUBSEQUENT PHASES OF CONSTRUCTION.
5. STAGING, STORAGE, AND SPOILS LOCATIONS ARE ONLY PERMITTED WITHIN THE CONSTRUCTION AREA.
6. PER TPDES REQUIREMENTS, DISTRIBUTED AREAS ON WHICH CONSTRUCTION ACTIVITIES HAVE CEASED (TEMPORARILY OR PERMANENTLY) SHALL BE STABILIZED WITHIN 14 DAYS UNLESS ACTIVITY RESUMES WITHIN 21 DAYS. SEEDING DOES NOT CONSTITUTE AS STABILIZATION.

ITEM	DESCRIPTION	UNIT	QTY

LEGEND

- TRAFFIC FLOW ARROWS
- FLOW ARROW
- SCF — SEDIMENT CONTROL FENCE
- RFD2 — TY 2 ROCK FILTER DAM
- RFD3 — TY 3 ROCK FILTER DAM
- CONSTRUCTION EXIT
- CL-CI — EROSION CONTROL LOG
- CONSTRUCTION PHASE
- WETLAND AREA

DESIGN

INTERIM REVIEW

DOCUMENT INCOMPLETE. NOT INTENDED FOR PERMIT, BIDDING OR CONSTRUCTION.
ENGINEER: TYLER PAYNE DUBE
P.E. SERIAL NO: 118612
DATE: 1/9/2020

APPROVAL

INTERIM REVIEW

DOCUMENT INCOMPLETE. NOT INTENDED FOR PERMIT, BIDDING OR CONSTRUCTION.
ENGINEER: JOHN A. TYLER
P.E. SERIAL NO: 105193
DATE: 1/9/2020

0 10 20 30 60

SCALE: PLAN 1" = 30'

REV. NO.	DATE	DESCRIPTION	BY

PAPE-DAWSON ENGINEERS
SAN ANTONIO | AUSTIN | HOUSTON | FORT WORTH | DALLAS
2000 NW LOOP 410 | SAN ANTONIO, TX 78213 | 210.375.9000
TBPE FIRM REGISTRATION #470 | TBPLS FIRM REGISTRATION #10028800

City of New Braunfels

KLEIN RD PHASE 2

SW3P LAYOUT PHASE 2 STEP 2

SHEET 13 OF 18

DGN:	STATE	PROJECT NO.	ROADWAY
CHK DGN:	TEXAS	NB 18-026	KLEIN RD
DWG:	COUNTY	CITY	SHEET NO.
CHK DWG:	GUADALUPE	NEW BRAUNFELS	281

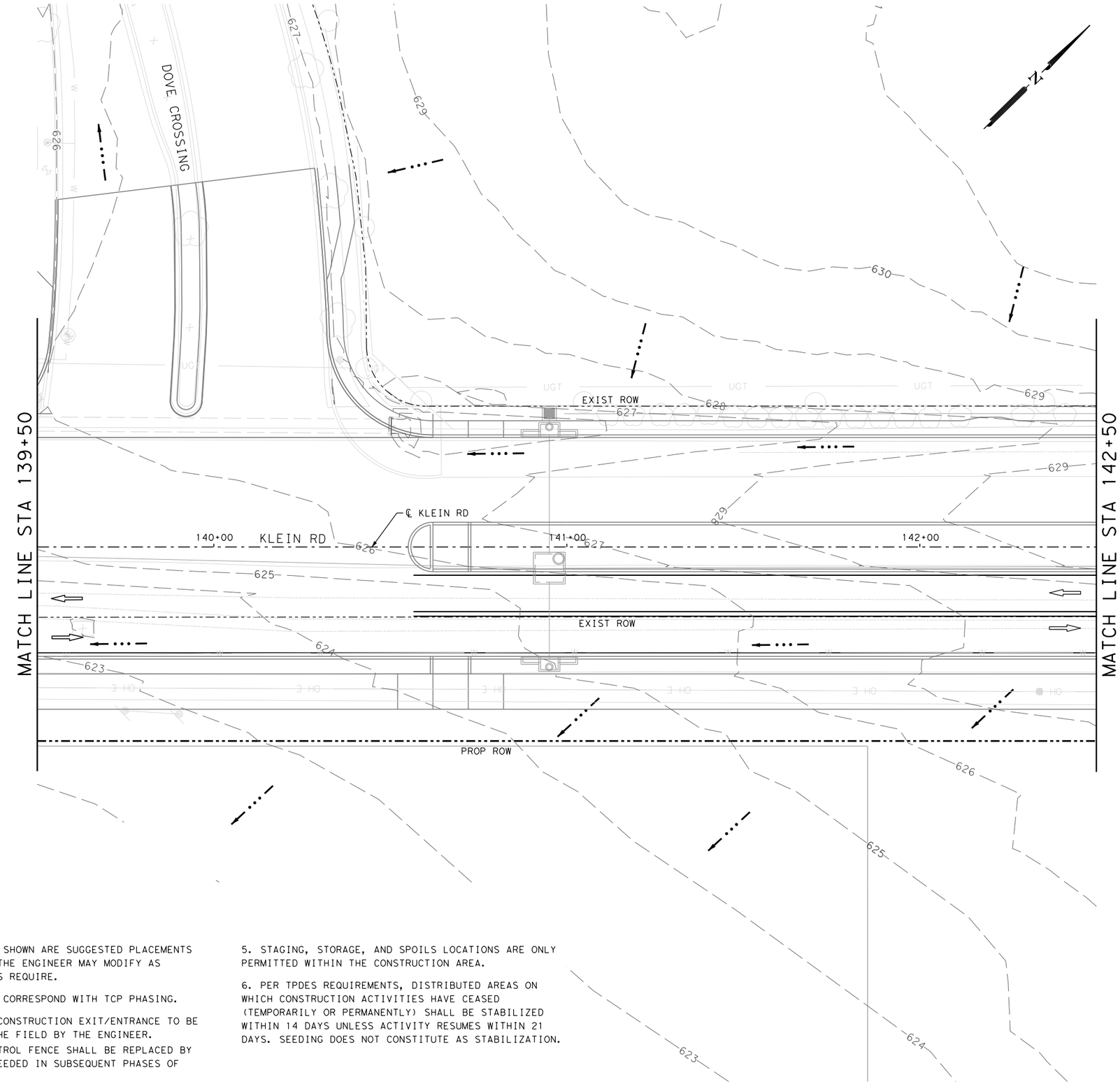

ITEM	DESCRIPTION	UNIT	QTY

LEGEND

- TRAFFIC FLOW ARROWS
- FLOW ARROW
- SCF — SEDIMENT CONTROL FENCE
- RFD2 — TY 2 ROCK FILTER DAM
- RFD3 — TY 3 ROCK FILTER DAM
- CONSTRUCTION EXIT
- CL-CI — EROSION CONTROL LOG
- CONSTRUCTION PHASE
- WETLAND AREA

DESIGN

INTERIM REVIEW

DOCUMENT INCOMPLETE. NOT INTENDED FOR PERMIT, BIDDING OR CONSTRUCTION.
ENGINEER: TYLER PAYNE DUBE
P.E. SERIAL NO: 118612
DATE: 1/9/2020

APPROVAL

INTERIM REVIEW

DOCUMENT INCOMPLETE. NOT INTENDED FOR PERMIT, BIDDING OR CONSTRUCTION.
ENGINEER: JOHN A. TYLER
P.E. SERIAL NO: 105193
DATE: 1/9/2020

0 10 20 30 60

SCALE: PLAN 1" = 30'

NOTES:

1. THE MEASURES SHOWN ARE SUGGESTED PLACEMENTS OF SW3P ITEMS. THE ENGINEER MAY MODIFY AS FIELD CONDITIONS REQUIRE.
2. SW3P LAYOUTS CORRESPOND WITH TCP PHASING.
3. LOCATION OF CONSTRUCTION EXIT/ENTRANCE TO BE DETERMINED IN THE FIELD BY THE ENGINEER.
4. SEDIMENT CONTROL FENCE SHALL BE REPLACED BY CONTRACTOR AS NEEDED IN SUBSEQUENT PHASES OF CONSTRUCTION.
5. STAGING, STORAGE, AND SPOILS LOCATIONS ARE ONLY PERMITTED WITHIN THE CONSTRUCTION AREA.
6. PER TPDES REQUIREMENTS, DISTRIBUTED AREAS ON WHICH CONSTRUCTION ACTIVITIES HAVE CEASED (TEMPORARILY OR PERMANENTLY) SHALL BE STABILIZED WITHIN 14 DAYS UNLESS ACTIVITY RESUMES WITHIN 21 DAYS. SEEDING DOES NOT CONSTITUTE AS STABILIZATION.

REV. NO.	DATE	DESCRIPTION	BY

PAPE-DAWSON ENGINEERS
SAN ANTONIO | AUSTIN | HOUSTON | FORT WORTH | DALLAS
2000 NW LOOP 410 | SAN ANTONIO, TX 78213 | 210.375.9000
TBPE FIRM REGISTRATION #470 | TBPLS FIRM REGISTRATION #10028800

City of New Braunfels

KLEIN RD PHASE 2

SW3P LAYOUT PHASE 2 STEP 2

SHEET 14 OF 18

DGN:	STATE	PROJECT NO.	ROADWAY
CHK DGN:	TEXAS	NB 18-026	KLEIN RD
DWG:	COUNTY	CITY	SHEET NO.
CHK DWG:	GUADALUPE	NEW BRAUNFELS	282

Plotted on: 1/9/2020

Design Filename: H:\Projects\510\30\03\Design\Civil\SW3P\Phase2\5103003sw3b2a14.dgn

ITEM	DESCRIPTION	UNIT	QTY
0506-6020	CONSTRUCTION EXITS (INSTALL) (TY 1)	SY	111
0506-6024	CONSTRUCTION EXITS (REMOVE)	SY	111
0506-6041	BIODEG EROSN CONT LOGS (INSTL) (12")	LF	20
0506-6043	BIODEG EROSN CONT LOGS (REMOVE)	LF	20

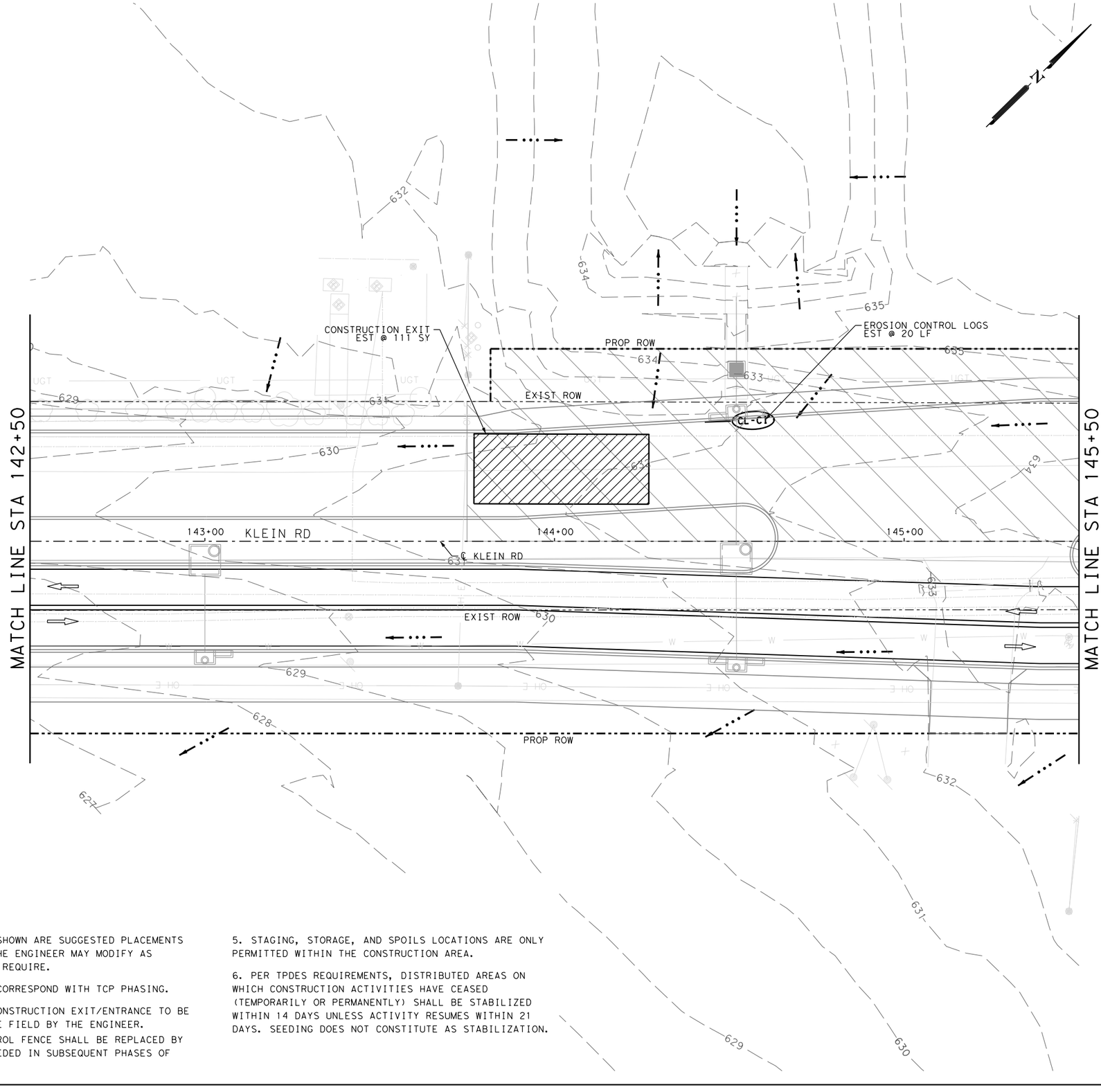

LEGEND

- TRAFFIC FLOW ARROWS
- FLOW ARROW
- SCF — SEDIMENT CONTROL FENCE
- RFD2 — TY 2 ROCK FILTER DAM
- RFD3 — TY 3 ROCK FILTER DAM
- CONSTRUCTION EXIT
- CL-CI — EROSION CONTROL LOG
- CONSTRUCTION PHASE
- WETLAND AREA

NOTES:

1. THE MEASURES SHOWN ARE SUGGESTED PLACEMENTS OF SW3P ITEMS. THE ENGINEER MAY MODIFY AS FIELD CONDITIONS REQUIRE.
2. SW3P LAYOUTS CORRESPOND WITH TCP PHASING.
3. LOCATION OF CONSTRUCTION EXIT/ENTRANCE TO BE DETERMINED IN THE FIELD BY THE ENGINEER.
4. SEDIMENT CONTROL FENCE SHALL BE REPLACED BY CONTRACTOR AS NEEDED IN SUBSEQUENT PHASES OF CONSTRUCTION.
5. STAGING, STORAGE, AND SPOILS LOCATIONS ARE ONLY PERMITTED WITHIN THE CONSTRUCTION AREA.
6. PER TPDES REQUIREMENTS, DISTRIBUTED AREAS ON WHICH CONSTRUCTION ACTIVITIES HAVE CEASED (TEMPORARILY OR PERMANENTLY) SHALL BE STABILIZED WITHIN 14 DAYS UNLESS ACTIVITY RESUMES WITHIN 21 DAYS. SEEDING DOES NOT CONSTITUTE AS STABILIZATION.

DESIGN

INTERIM REVIEW
DOCUMENT INCOMPLETE. NOT INTENDED FOR PERMIT, BIDDING OR CONSTRUCTION.
ENGINEER: TYLER PAYNE DUBE
P.E. SERIAL NO: 118612
DATE: 1/9/2020

APPROVAL

INTERIM REVIEW
DOCUMENT INCOMPLETE. NOT INTENDED FOR PERMIT, BIDDING OR CONSTRUCTION.
ENGINEER: JOHN A. TYLER
P.E. SERIAL NO: 105193
DATE: 1/9/2020

0 10 20 30 60

SCALE: PLAN 1"= 30'

REV. NO.	DATE	DESCRIPTION	BY

PAPE-DAWSON ENGINEERS
SAN ANTONIO | AUSTIN | HOUSTON | FORT WORTH | DALLAS
2000 NW LOOP 410 | SAN ANTONIO, TX 78213 | 210.375.9000
TBPE FIRM REGISTRATION #470 | TBPLS FIRM REGISTRATION #10028800

City of New Braunfels

KLEIN RD PHASE 2

SW3P LAYOUT PHASE 2 STEP 2

SHEET 15 OF 18

DGN:	STATE	PROJECT NO.	ROADWAY
CHK DGN:	TEXAS	NB 18-026	KLEIN RD
DWG:	COUNTY	CITY	SHEET NO.
CHK DWG:	GUADALUPE	NEW BRAUNFELS	283

Plotted on: 1/9/2020

Design Filename: H:\Projects\510\30\03\Design\Civil\SW3P\Phase2\510300 3sw3b2a15.dgn

Plotted on: 1/9/2020

Design Filename: H:\Projects\510\30\03\Design\Civil\SW3P\Phase2\5103003sw3p2a16.dgn

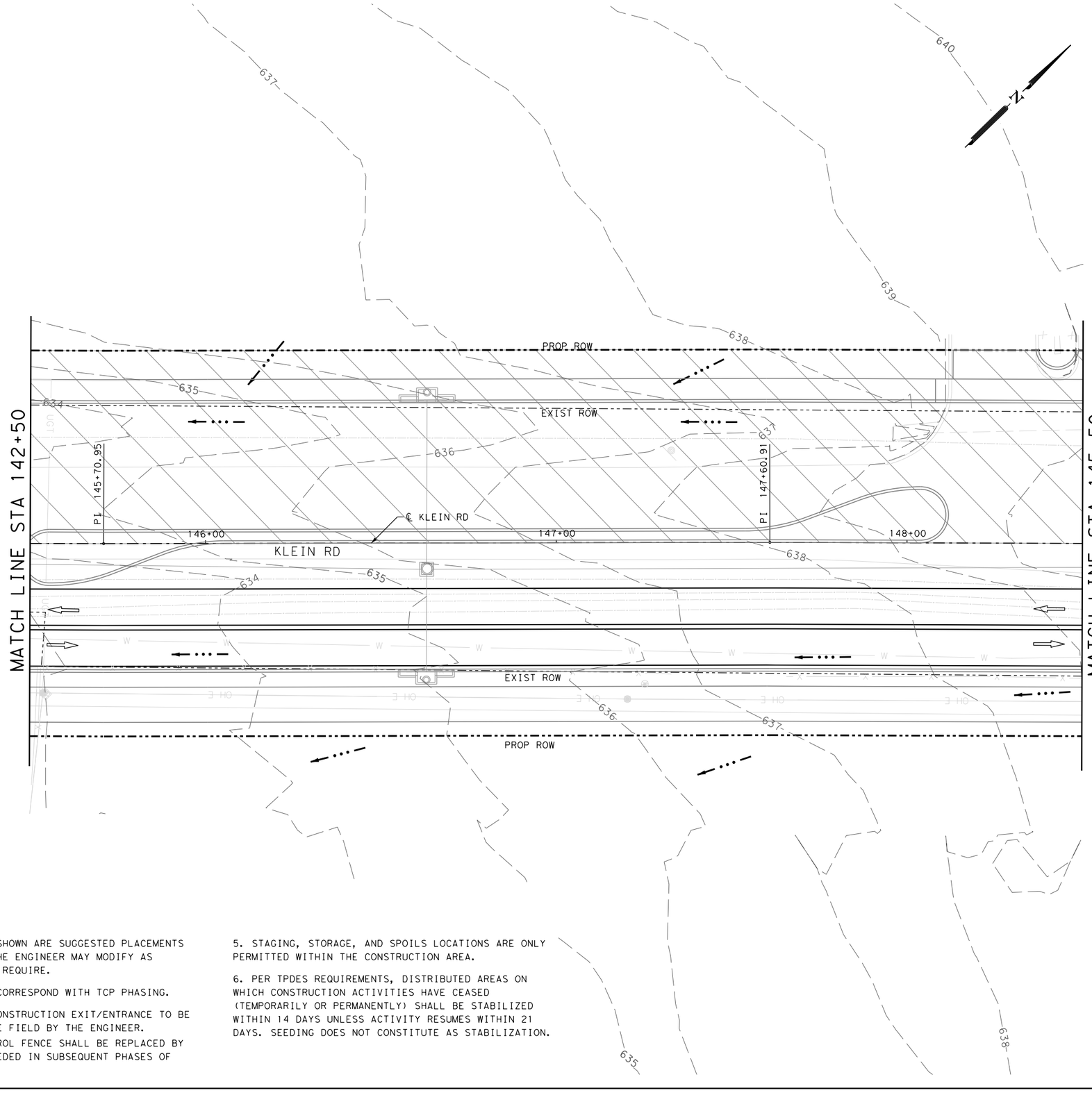

NOTES:

1. THE MEASURES SHOWN ARE SUGGESTED PLACEMENTS OF SW3P ITEMS. THE ENGINEER MAY MODIFY AS FIELD CONDITIONS REQUIRE.
2. SW3P LAYOUTS CORRESPOND WITH TCP PHASING.
3. LOCATION OF CONSTRUCTION EXIT/ENTRANCE TO BE DETERMINED IN THE FIELD BY THE ENGINEER.
4. SEDIMENT CONTROL FENCE SHALL BE REPLACED BY CONTRACTOR AS NEEDED IN SUBSEQUENT PHASES OF CONSTRUCTION.
5. STAGING, STORAGE, AND SPOILS LOCATIONS ARE ONLY PERMITTED WITHIN THE CONSTRUCTION AREA.
6. PER TPDES REQUIREMENTS, DISTRIBUTED AREAS ON WHICH CONSTRUCTION ACTIVITIES HAVE CEASED (TEMPORARILY OR PERMANENTLY) SHALL BE STABILIZED WITHIN 14 DAYS UNLESS ACTIVITY RESUMES WITHIN 21 DAYS. SEEDING DOES NOT CONSTITUTE AS STABILIZATION.

ITEM	DESCRIPTION	UNIT	QTY

LEGEND

- TRAFFIC FLOW ARROWS
- FLOW ARROW
- SCF — SEDIMENT CONTROL FENCE
- RFD2 — TY 2 ROCK FILTER DAM
- RFD3 — TY 3 ROCK FILTER DAM
- CONSTRUCTION EXIT
- CL-CI — EROSION CONTROL LOG
- CONSTRUCTION PHASE
- WETLAND AREA

DESIGN

INTERIM REVIEW

DOCUMENT INCOMPLETE. NOT INTENDED FOR PERMIT, BIDDING OR CONSTRUCTION.
ENGINEER: TYLER PAYNE DUBE
P.E. SERIAL NO: 118612
DATE: 1/9/2020

APPROVAL

INTERIM REVIEW

DOCUMENT INCOMPLETE. NOT INTENDED FOR PERMIT, BIDDING OR CONSTRUCTION.
ENGINEER: JOHN A. TYLER
P.E. SERIAL NO: 105193
DATE: 1/9/2020

0 10 20 30 60

SCALE: PLAN 1" = 30'

REV. NO.	DATE	DESCRIPTION	BY

PAPE-DAWSON ENGINEERS
SAN ANTONIO | AUSTIN | HOUSTON | FORT WORTH | DALLAS
2000 NW LOOP 410 | SAN ANTONIO, TX 78213 | 210.375.9000
TBPE FIRM REGISTRATION #470 | TBPLS FIRM REGISTRATION #10028800

City of New Braunfels

KLEIN RD PHASE 2

SW3P LAYOUT PHASE 2 STEP 2

SHEET 16 OF 18

DGN:	STATE	PROJECT NO.	ROADWAY
CHK DGN:	TEXAS	NB 18-026	KLEIN RD
DWG:	COUNTY	CITY	SHEET NO.
CHK DWG:	GUADALUPE	NEW BRAUNFELS	284

Plotted on: 1/9/2020

Design Filename: H:\Projects\510\30\03\Design\Civil\SW3P\Phase2\5103003sw3p2A17.dgn

ITEM	DESCRIPTION	UNIT	QTY

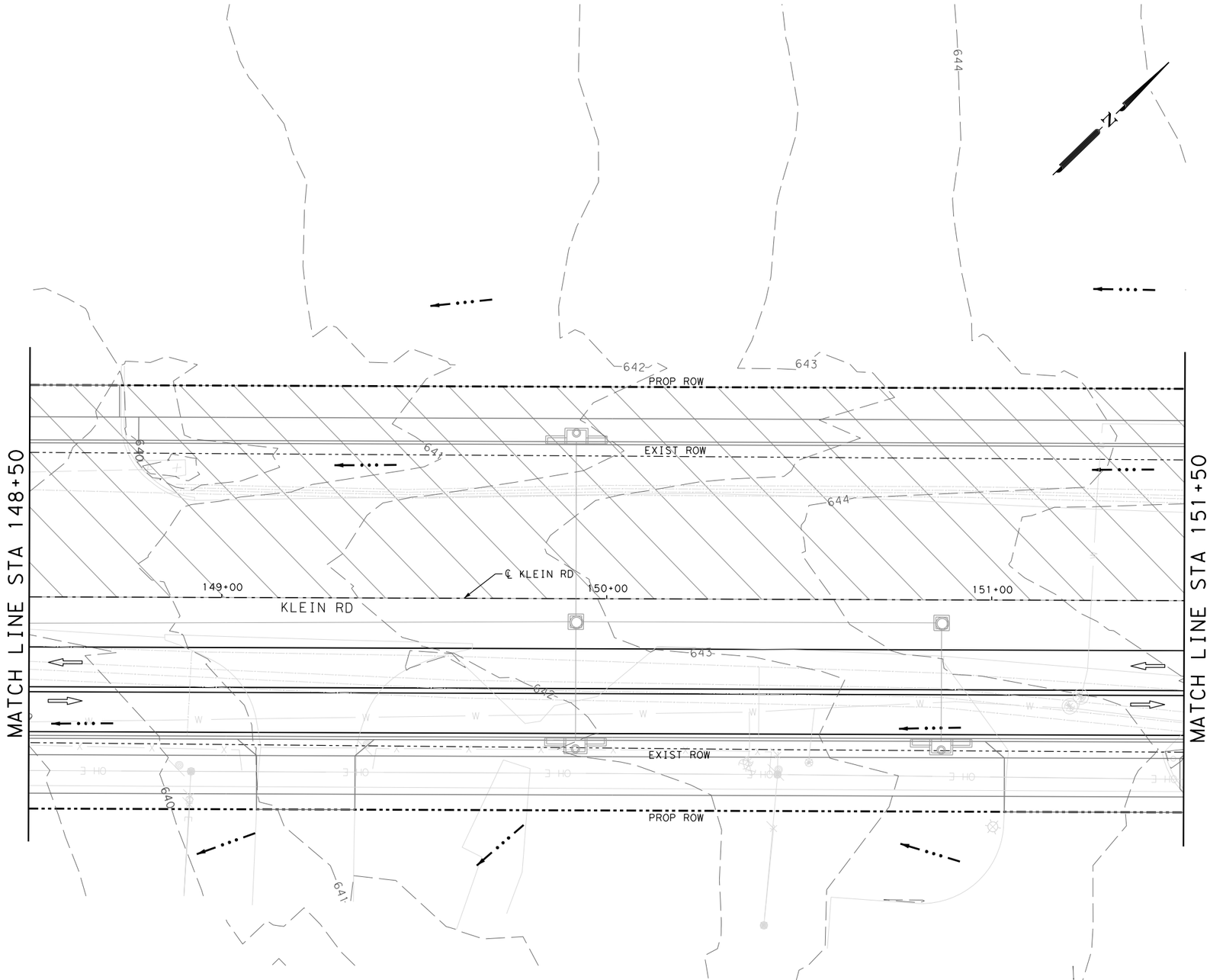

LEGEND

- TRAFFIC FLOW ARROWS
- FLOW ARROW
- SCF — SEDIMENT CONTROL FENCE
- RFD2 — TY 2 ROCK FILTER DAM
- RFD3 — TY 3 ROCK FILTER DAM
- CONSTRUCTION EXIT
- CL-CI — EROSION CONTROL LOG
- CONSTRUCTION PHASE
- WETLAND AREA

DESIGN

INTERIM REVIEW

DOCUMENT INCOMPLETE. NOT INTENDED FOR PERMIT, BIDDING OR CONSTRUCTION.
ENGINEER: TYLER PAYNE DUBE
P.E. SERIAL NO: 118612
DATE: 1/9/2020

APPROVAL

INTERIM REVIEW

DOCUMENT INCOMPLETE. NOT INTENDED FOR PERMIT, BIDDING OR CONSTRUCTION.
ENGINEER: JOHN A. TYLER
P.E. SERIAL NO: 105193
DATE: 1/9/2020

0 10 20 30 60

SCALE: PLAN 1" = 30'

REV. NO.	DATE	DESCRIPTION	BY

PAPE-DAWSON ENGINEERS
SAN ANTONIO | AUSTIN | HOUSTON | FORT WORTH | DALLAS
2000 NW LOOP 410 | SAN ANTONIO, TX 78213 | 210.375.9000
TBPE FIRM REGISTRATION #470 | TBPLS FIRM REGISTRATION #10028800

City of New Braunfels

KLEIN RD PHASE 2

SW3P LAYOUT PHASE 2 STEP 2

SHEET 17 OF 18

DGN:	STATE	PROJECT NO.	ROADWAY
CHK DGN:	TEXAS	NB 18-026	KLEIN RD
DWG:	COUNTY	CITY	SHEET NO.
CHK DWG:	GUADALUPE	NEW BRAUNFELS	285

NOTES:

1. THE MEASURES SHOWN ARE SUGGESTED PLACEMENTS OF SW3P ITEMS. THE ENGINEER MAY MODIFY AS FIELD CONDITIONS REQUIRE.
2. SW3P LAYOUTS CORRESPOND WITH TCP PHASING.
3. LOCATION OF CONSTRUCTION EXIT/ENTRANCE TO BE DETERMINED IN THE FIELD BY THE ENGINEER.
4. SEDIMENT CONTROL FENCE SHALL BE REPLACED BY CONTRACTOR AS NEEDED IN SUBSEQUENT PHASES OF CONSTRUCTION.
5. STAGING, STORAGE, AND SPOILS LOCATIONS ARE ONLY PERMITTED WITHIN THE CONSTRUCTION AREA.
6. PER TPDES REQUIREMENTS, DISTRIBUTED AREAS ON WHICH CONSTRUCTION ACTIVITIES HAVE CEASED (TEMPORARILY OR PERMANENTLY) SHALL BE STABILIZED WITHIN 14 DAYS UNLESS ACTIVITY RESUMES WITHIN 21 DAYS. SEEDING DOES NOT CONSTITUTE AS STABILIZATION.

ITEM	DESCRIPTION	UNIT	QTY
0506-6020	CONSTRUCTION EXITS (INSTALL) (TY 1)	SY	111
0506-6024	CONSTRUCTION EXITS (REMOVE)	SY	111

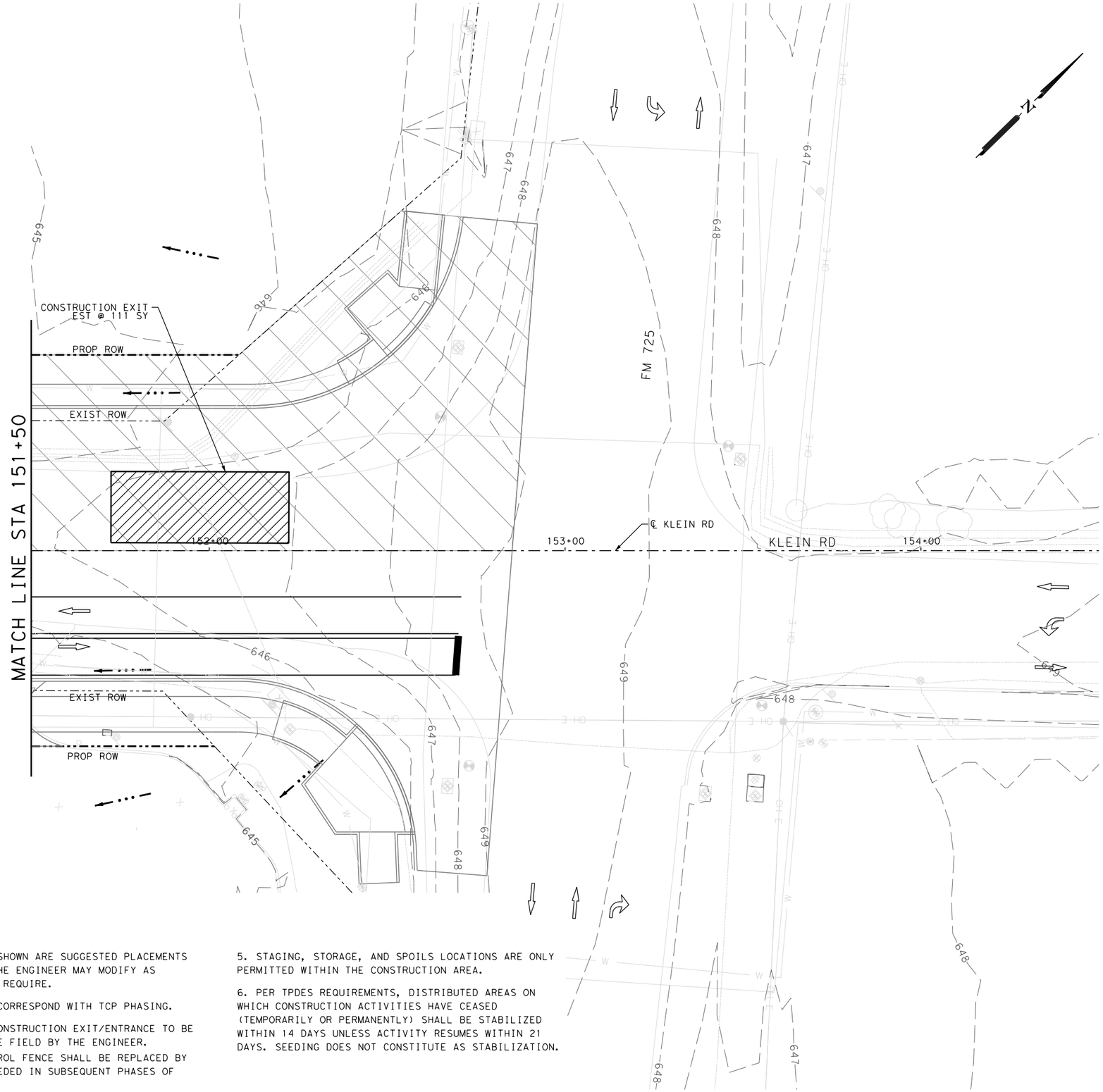

LEGEND

- TRAFFIC FLOW ARROWS
- FLOW ARROW
- SCF — SEDIMENT CONTROL FENCE
- RFD2 — TY 2 ROCK FILTER DAM
- RFD3 — TY 3 ROCK FILTER DAM
- CONSTRUCTION EXIT
- CL-CI — EROSION CONTROL LOG
- CONSTRUCTION PHASE
- WETLAND AREA

NOTES:

1. THE MEASURES SHOWN ARE SUGGESTED PLACEMENTS OF SW3P ITEMS. THE ENGINEER MAY MODIFY AS FIELD CONDITIONS REQUIRE.
2. SW3P LAYOUTS CORRESPOND WITH TCP PHASING.
3. LOCATION OF CONSTRUCTION EXIT/ENTRANCE TO BE DETERMINED IN THE FIELD BY THE ENGINEER.
4. SEDIMENT CONTROL FENCE SHALL BE REPLACED BY CONTRACTOR AS NEEDED IN SUBSEQUENT PHASES OF CONSTRUCTION.
5. STAGING, STORAGE, AND SPOILS LOCATIONS ARE ONLY PERMITTED WITHIN THE CONSTRUCTION AREA.
6. PER TPDES REQUIREMENTS, DISTRIBUTED AREAS ON WHICH CONSTRUCTION ACTIVITIES HAVE CEASED (TEMPORARILY OR PERMANENTLY) SHALL BE STABILIZED WITHIN 14 DAYS UNLESS ACTIVITY RESUMES WITHIN 21 DAYS. SEEDING DOES NOT CONSTITUTE AS STABILIZATION.

DESIGN

INTERIM REVIEW

DOCUMENT INCOMPLETE. NOT INTENDED FOR PERMIT, BIDDING OR CONSTRUCTION.
ENGINEER: TYLER PAYNE DUBE
P.E. SERIAL NO: 118612
DATE: 1/9/2020

APPROVAL

INTERIM REVIEW

DOCUMENT INCOMPLETE. NOT INTENDED FOR PERMIT, BIDDING OR CONSTRUCTION.
ENGINEER: JOHN A. TYLER
P.E. SERIAL NO: 105193
DATE: 1/9/2020

0 10 20 30 60

SCALE: PLAN 1"= 30'

REV. NO.	DATE	DESCRIPTION	BY

PAPE-DAWSON ENGINEERS
SAN ANTONIO | AUSTIN | HOUSTON | FORT WORTH | DALLAS
2000 NW LOOP 410 | SAN ANTONIO, TX 78213 | 210.375.9000
TBPE FIRM REGISTRATION #470 | TBPLS FIRM REGISTRATION #10028800

City of New Braunfels

KLEIN RD PHASE 2

SW3P LAYOUT PHASE 2 STEP 2

DGN:	STATE	PROJECT NO.	ROADWAY
CHK DGN:	TEXAS	NB 18-026	KLEIN RD
DWG:	COUNTY	CITY	SHEET NO.
CHK DWG:	GUADALUPE	NEW BRAUNFELS	286

Plotted on: 1/9/2020
Design Filename: H:\Projects\510\30\03\Design\Civil\SW3P\Phase2\5103003sw3p2A18.dgn

ITEM	DESCRIPTION	UNIT	QTY
0506-6041	BIODEG EROSN CONT LOGS (INSTL) (12")	LF	40
0506-6043	BIODEG EROSN CONT LOGS (REMOVE)	LF	40

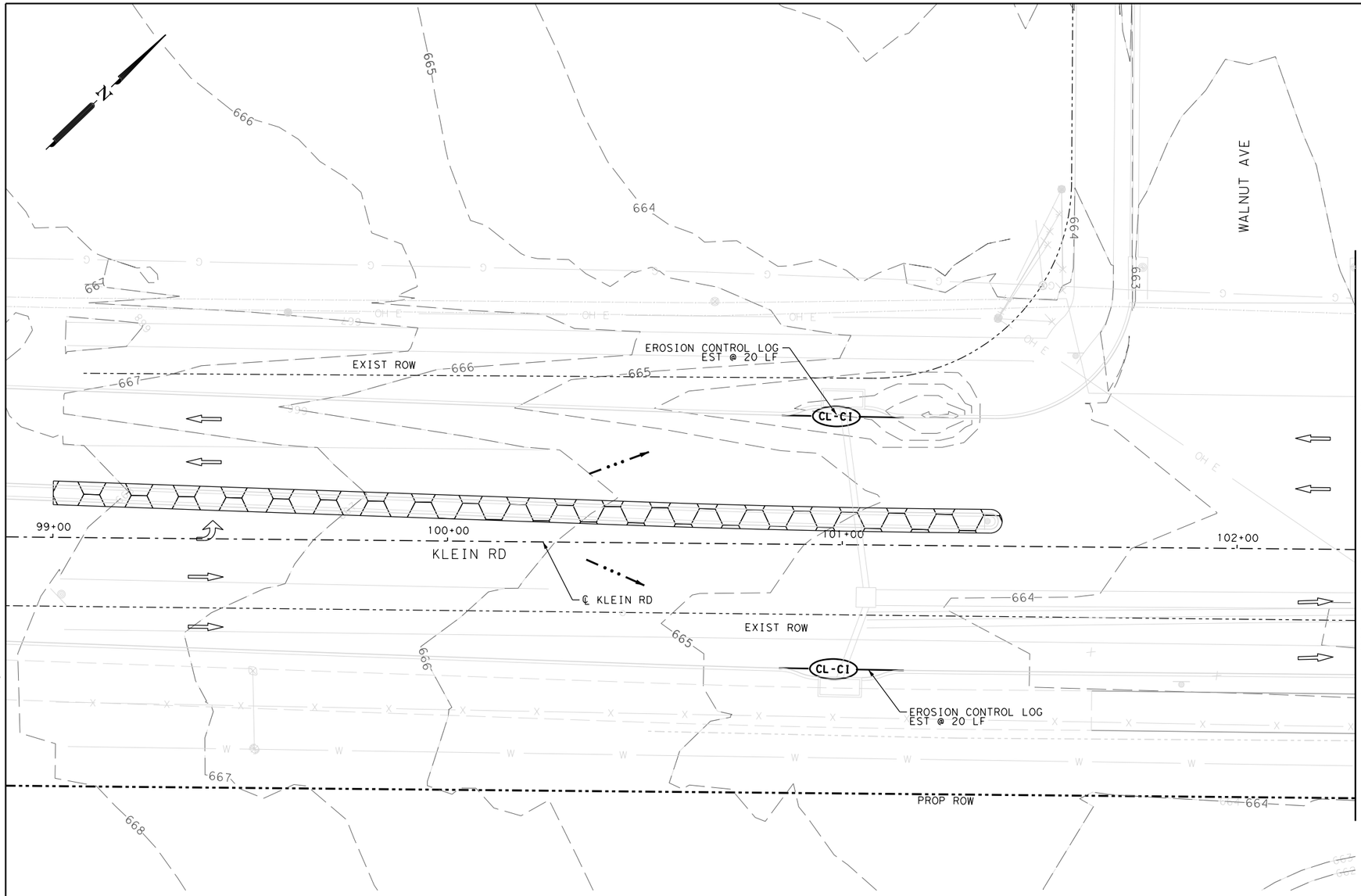

LEGEND

- TRAFFIC FLOW ARROWS
- FLOW ARROW
- SCF — SEDIMENT CONTROL FENCE
- RFD2 — TY 2 ROCK FILTER DAM
- RFD3 — TY 3 ROCK FILTER DAM
- CONSTRUCTION EXIT
- CL-C1 — EROSION CONTROL LOG
- CONSTRUCTION PHASE
- WETLAND AREA

DESIGN

INTERIM REVIEW

DOCUMENT INCOMPLETE. NOT INTENDED FOR PERMIT, BIDDING OR CONSTRUCTION.
ENGINEER: TYLER PAYNE DUBE
P.E. SERIAL NO: 118612
DATE: 1/9/2020

APPROVAL

INTERIM REVIEW

DOCUMENT INCOMPLETE. NOT INTENDED FOR PERMIT, BIDDING OR CONSTRUCTION.
ENGINEER: JOHN A. TYLER
P.E. SERIAL NO: 105193
DATE: 1/9/2020

0 10 20 30 60

SCALE: PLAN 1" = 30'

REV. NO.	DATE	DESCRIPTION	BY

PAPE-DAWSON ENGINEERS
SAN ANTONIO | AUSTIN | HOUSTON | FORT WORTH | DALLAS
2000 NW LOOP 410 | SAN ANTONIO, TX 78213 | 210.375.9000
TBPE FIRM REGISTRATION #470 | TBPLS FIRM REGISTRATION #10028800

City of New Braunfels

KLEIN RD PHASE 2

SW3P LAYOUT PHASE 3

SHEET 1 OF 2

DGN:	STATE	PROJECT NO.	ROADWAY
CHK DGN:	TEXAS	NB 18-026	KLEIN RD
DWG:	COUNTY	CITY	SHEET NO.
CHK DWG:	GUADALUPE	NEW BRAUNFELS	287

NOTES:

1. THE MEASURES SHOWN ARE SUGGESTED PLACEMENTS OF SW3P ITEMS. THE ENGINEER MAY MODIFY AS FIELD CONDITIONS REQUIRE.
2. SW3P LAYOUTS CORRESPOND WITH TCP PHASING.
3. LOCATION OF CONSTRUCTION EXIT/ENTRANCE TO BE DETERMINED IN THE FIELD BY THE ENGINEER.
4. SEDIMENT CONTROL FENCE SHALL BE REPLACED BY CONTRACTOR AS NEEDED IN SUBSEQUENT PHASES OF CONSTRUCTION.
5. STAGING, STORAGE, AND SPOILS LOCATIONS ARE ONLY PERMITTED WITHIN THE CONSTRUCTION AREA.
6. PER TPDES REQUIREMENTS, DISTRIBUTED AREAS ON WHICH CONSTRUCTION ACTIVITIES HAVE CEASED (TEMPORARILY OR PERMANENTLY) SHALL BE STABILIZED WITHIN 14 DAYS UNLESS ACTIVITY RESUMES WITHIN 21 DAYS. SEEDING DOES NOT CONSTITUTE AS STABILIZATION.

Plotted on: 1/9/2020

Design Filename: H:\Projects\510\30\03\Design\Civil\SW3P\Phase3\5103003sw3p301.dgn

Plotted on: 1/9/2020

Design Filename: H:\Projects\510\30\03\Design\Civil\SW3P\Phase3\5103003sw3p302.dgn

MATCH LINE STA 121+30

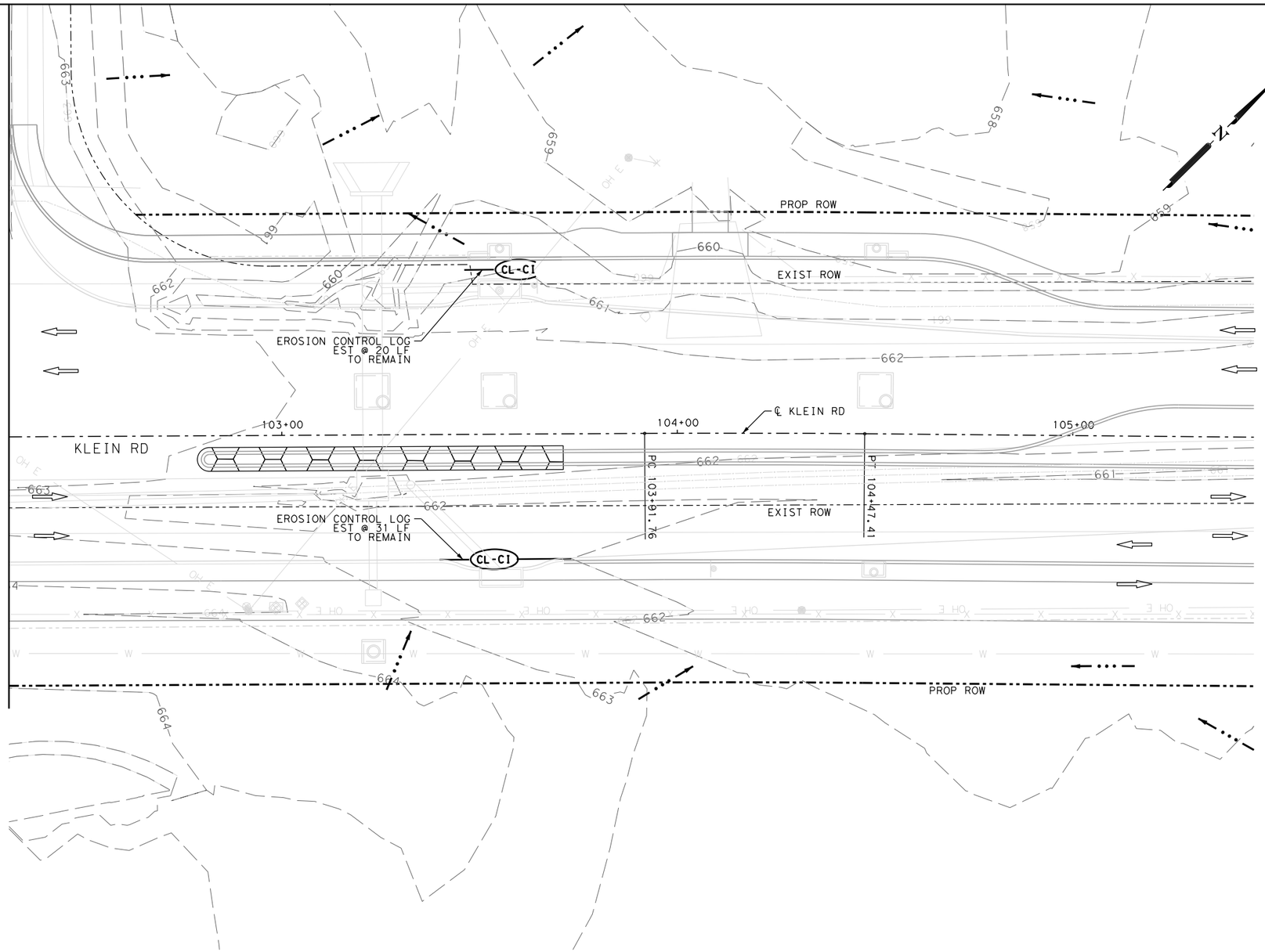

ITEM	DESCRIPTION	UNIT	QTY
0506-6043	BIODEG EROSN CONT LOGS (REMOVE)	LF	51

LEGEND

- TRAFFIC FLOW ARROWS
- FLOW ARROW
- SCF — SEDIMENT CONTROL FENCE
- RFD2 — TY 2 ROCK FILTER DAM
- RFD3 — TY 3 ROCK FILTER DAM
- CONSTRUCTION EXIT
- CL-CI — EROSION CONTROL LOG
- CONSTRUCTION PHASE
- WETLAND AREA

NOTES:

1. THE MEASURES SHOWN ARE SUGGESTED PLACEMENTS OF SW3P ITEMS. THE ENGINEER MAY MODIFY AS FIELD CONDITIONS REQUIRE.
2. SW3P LAYOUTS CORRESPOND WITH TCP PHASING.
3. LOCATION OF CONSTRUCTION EXIT/ENTRANCE TO BE DETERMINED IN THE FIELD BY THE ENGINEER.
4. SEDIMENT CONTROL FENCE SHALL BE REPLACED BY CONTRACTOR AS NEEDED IN SUBSEQUENT PHASES OF CONSTRUCTION.
5. STAGING, STORAGE, AND SPOILS LOCATIONS ARE ONLY PERMITTED WITHIN THE CONSTRUCTION AREA.
6. PER TPDES REQUIREMENTS, DISTRIBUTED AREAS ON WHICH CONSTRUCTION ACTIVITIES HAVE CEASED (TEMPORARILY OR PERMANENTLY) SHALL BE STABILIZED WITHIN 14 DAYS UNLESS ACTIVITY RESUMES WITHIN 21 DAYS. SEEDING DOES NOT CONSTITUTE AS STABILIZATION.

DESIGN

INTERIM REVIEW
DOCUMENT INCOMPLETE. NOT INTENDED FOR PERMIT, BIDDING OR CONSTRUCTION.
ENGINEER: TYLER PAYNE DUBE
P.E. SERIAL NO: 118612
DATE: 1/9/2020

APPROVAL

INTERIM REVIEW
DOCUMENT INCOMPLETE. NOT INTENDED FOR PERMIT, BIDDING OR CONSTRUCTION.
ENGINEER: JOHN A. TYLER
P.E. SERIAL NO: 105193
DATE: 1/9/2020

0 10 20 30 60

SCALE: PLAN 1"= 30'

REV. NO.	DATE	DESCRIPTION	BY

PAPE-DAWSON ENGINEERS
SAN ANTONIO | AUSTIN | HOUSTON | FORT WORTH | DALLAS
2000 NW LOOP 410 | SAN ANTONIO, TX 78213 | 210.375.9000
TBPE FIRM REGISTRATION #470 | TBPLS FIRM REGISTRATION #10028800

City of New Braunfels

KLEIN RD PHASE 2

SW3P LAYOUT PHASE 3

SHEET 2 OF 2

DGN:	STATE	PROJECT NO.	ROADWAY
CHK DGN:	TEXAS	NB 18-026	KLEIN RD
DWG:	COUNTY	CITY	SHEET NO.
CHK DWG:	GUADALUPE	NEW BRAUNFELS	288

DISCLAIMER:
The use of this standard is governed by the "Texas Engineering Practice Act". No warranty of any kind is made by TxDOT for any purpose whatsoever. TxDOT assumes no responsibility for the conversion of this standard to other formats or for incorrect results or damages resulting from its use.

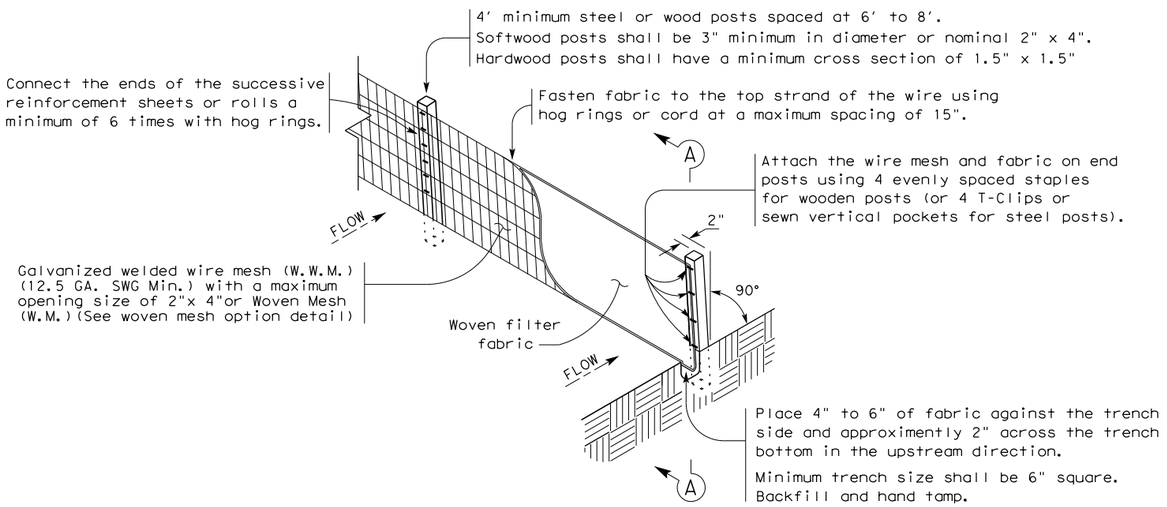

TEMPORARY SEDIMENT CONTROL FENCE

SCF

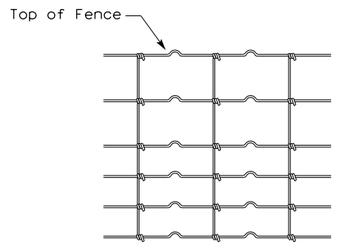

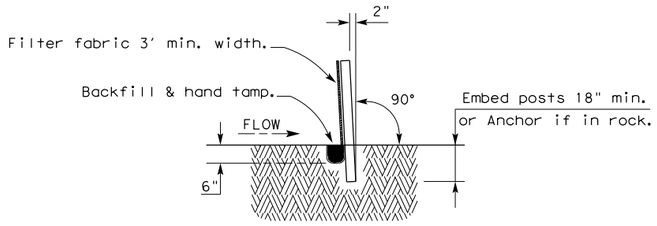

SECTION A-A

HINGE JOINT KNOT WOVEN MESH (OPTION) DETAIL

Galvanized hinge joint knot woven mesh (12.5 GA.SWG Min.) requires a minimum of five horizontal wires spaced at a maximum of 12 inches apart and all vertical wires spaced at a maximum of 12 inches apart.

SEDIMENT CONTROL FENCE USAGE GUIDELINES

A sediment control fence may be constructed near the downstream perimeter of a disturbed area along a contour to intercept sediment from overland runoff. A 2 year storm frequency may be used to calculate the flow rate to be filtered.

Sediment control fence should be sized to filter a maximum flow through rate of 100 GPM/FT^2. Sediment control fence is not recommended to control erosion from a drainage area larger than 2 acres.

LEGEND

Sediment Control Fence

SCF

GENERAL NOTES

1. Vertical tracking is required on projects where soil distributing activities have occurred unless otherwise approved.
2. Perform vertical tracking on slopes to temporarily stabilize soil.
3. Provide equipment with a track undercarriage capable of producing linear soil impressions measuring a minimum of 12" in length by 2" to 4" in width by 1/2" to 2" in depth.
4. Do not exceed 12" between track impressions.
5. Install continous linear track impressions where the minimum 12" length impressions are perpendicular to the slope or direction of water flow.

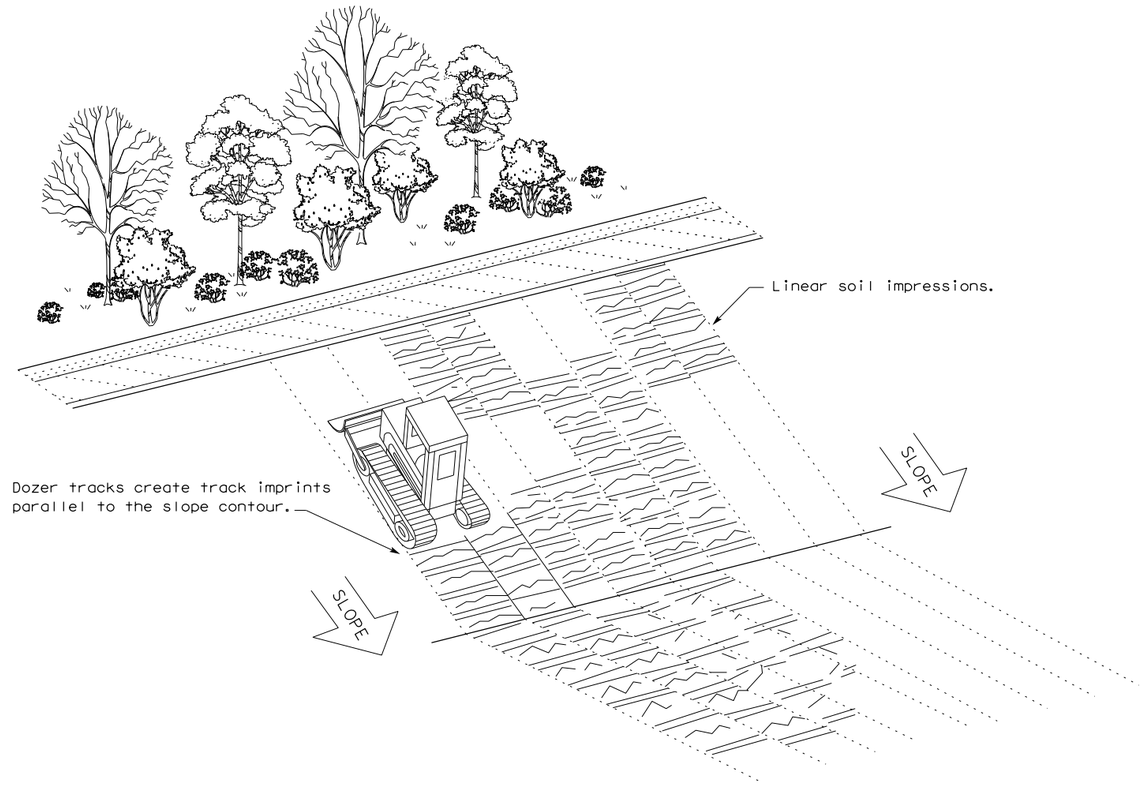

VERTICAL TRACKING

Texas Department of Transportation

Design Division Standard

TEMPORARY EROSION, SEDIMENT AND WATER POLLUTION CONTROL MEASURES

FENCE & VERTICAL TRACKING

EC(1)-16

FILE: ec116	DN: TxDOT	CK: KM	DW: VP	DN/CK: LS	
© TxDOT: JULY 2016	CONT	SECT	JOB	HIGHWAY	
REVISIONS				KLEIN RD	
	DIST	COUNTY		SHEET NO.	
	SAT	GUADALUPE		289	

!DATE020
!FILE/Projects\510\30\03\Design\Civil\Standards\SW3P\ec116.dgn

DISCLAIMER:
The use of this standard is governed by the "Texas Engineering Practice Act". No warranty of any kind is made by TxDOT for any purpose whatsoever. TxDOT assumes no responsibility for the conversion of this standard to other formats or for incorrect results or damages resulting from its use.

DATE: 1/9/2020
FILE: H:\projects\510\30\03\Design\Civil\Standards\SW3P\ec216.dgn

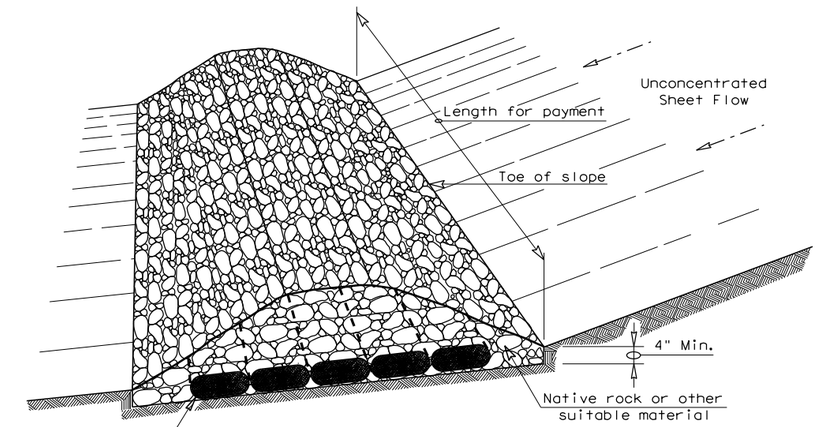

FILTER DAM AT TOE OF SLOPE

RFD1

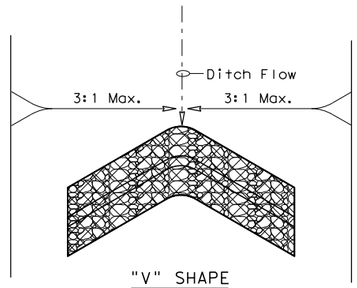

"V" SHAPE
PLAN VIEW

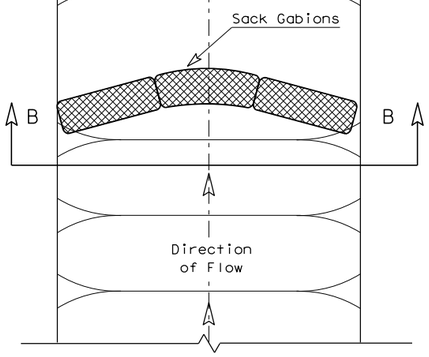

PLAN VIEW

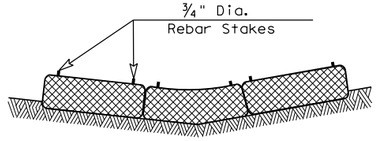

SECTION B-B

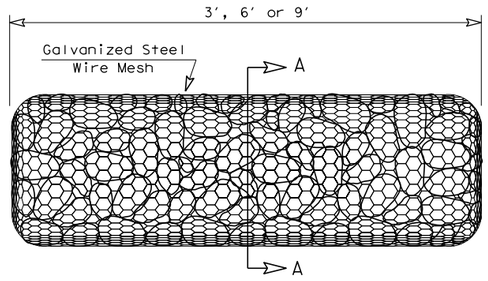

TYPE 4 (SACK GABIONS)

RFD4

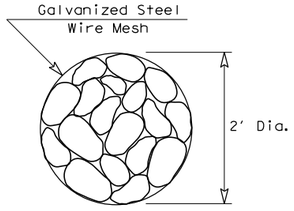

SECTION A-A

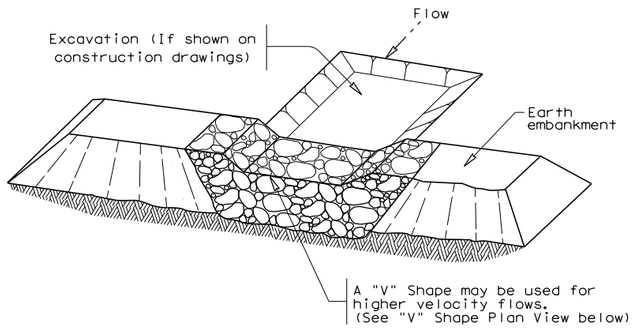

FILTER DAM AT SEDIMENT TRAP

RFD1 OR RFD2

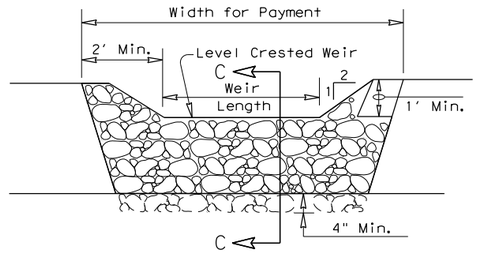

PROFILE

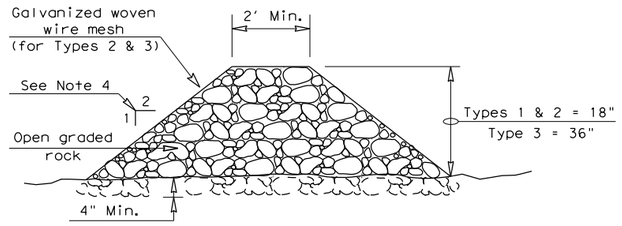

SECTION C-C

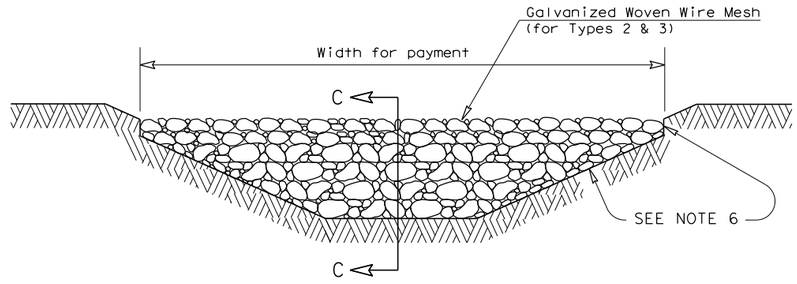

FILTER DAM AT CHANNEL SECTIONS

RFD1 OR RFD2 OR RFD3

GENERAL NOTES

1. If shown on the plans or directed by the Engineer, filter dams should be placed near the toe of slopes where erosion is anticipated, upstream and/or downstream at drainage structures, and in roadway ditches and channels to collect sediment.
2. Materials (aggregate, wire mesh, sandbags, etc.) shall be as indicated by the specification for "Rock Filter Dams for Erosion and Sedimentation Control".
3. The rock filter dam dimensions shall be as indicated on the SW3P plans.
4. Side slopes should be 2:1 or flatter. Dams within the safety zone shall have sideslopes of 6:1 or flatter.
5. Maintain a minimum of 1' between top of rock filter dam weir and top of embankment for filter dams at sediment traps.
6. Filter dams should be embedded a minimum of 4" into existing ground.
7. The sediment trap for ponding of sediment laden runoff shall be of the dimensions shown on the plans.
8. Rock filter dam types 2 & 3 shall be secured with 20 gauge galvanized woven wire mesh with 1" diameter hexagonal openings. The aggregate shall be placed on the mesh to the height & slopes specified. The mesh shall be folded at the upstream side over the aggregate and tightly secured to itself on the downstream side using wire ties or hog rings. For in stream use, the mesh should be secured or staked to the stream bed prior to aggregate placement.
9. Sack Gabions should be staked down with ¾" dia. rebar stakes, and have a double-twisted hexagonal weave with a nominal mesh opening of 2 ½" x 3 ¼"
10. Flow outlet should be onto a stabilized area (vegetation, rock, etc.).
11. The guidelines shown hereon are suggestions only and may be modified by the Engineer.

ROCK FILTER DAM USAGE GUIDELINES

Rock Filter Dams should be constructed downstream from disturbed areas to intercept sediment from overland runoff and/or concentrated flow. The dams should be sized to filter a maximum flow through rate of 60 GPM/FT^2 of cross sectional area. A 2 year storm frequency may be used to calculate the flow rate.

Type 1 (18" high with no wire mesh) (3" to 6" aggregate): Type 1 may be used at the toe of slopes, around inlets, in small ditches, and at dike or swale outlets. This type of dam is recommended to control erosion from a drainage area of 5 acres or less. Type 1 may not be used in concentrated high velocity flows (approximently 8 Ft/Sec or more) in which aggregate wash out may occur. Sandbags may be used at the embedded foundation (4" deep min.) for better filtering efficiency of low flows if called for on the plans or directed by the Engineer.

Type 2 (18" high with wire mesh) (3" to 6" aggregate): Type 2 may be used in ditches and at dike or swale outlets.

Type 3 (36" high with wire mesh) (4" to 8" aggregate): Type 3 may be used in stream flow and should be secured to the stream bed.

Type 4 (Sack gabions) (3" to 6" aggregate): Type 4 May be used in ditches and smaller channels to form an erosion control dam.

Type 5: Provide rock filter dams as shown on plans.

PLAN SHEET LEGEND

Type 1 Rock Filter Dam	RFD1
Type 2 Rock Filter Dam	RFD2
Type 3 Rock Filter Dam	RFD3
Type 4 Rock Filter Dam	RFD4

Texas Department of Transportation

Design Division Standard

TEMPORARY EROSION, SEDIMENT AND WATER POLLUTION CONTROL MEASURES

ROCK FILTER DAMS

EC(2)-16

FILE: ec216	DN: TxDOT	CK: KM	DW: VP	DN/CK: LS		
© TxDOT: JULY 2016	CONT	SECT	JOB	HIGHWAY		
REVISIONS				KLEIN RD		
	DIST	COUNTY		SHEET NO.		
	SAT	GUADALUPE		290		

DISCLAIMER:
The use of this standard is governed by the "Texas Engineering Practice Act". No warranty of any kind is made by TxDOT for any purpose whatsoever. TxDOT assumes no responsibility for the conversion of this standard to other formats or for incorrect results or damages resulting from its use.

DATE: 1/9/2020
FILE: H:\Projects\510\30\03\Design\Civil\Standards\SW3P\ec316.dgn

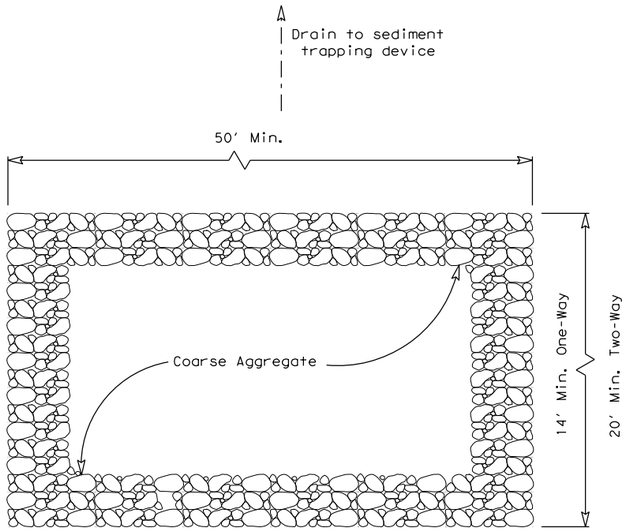

PLAN VIEW

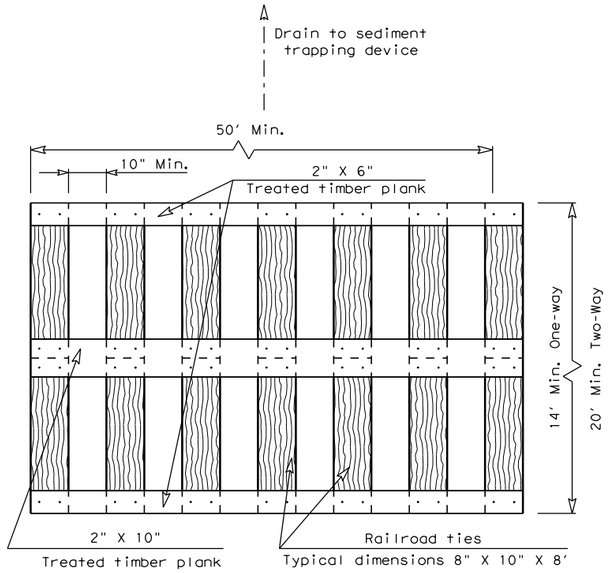

PLAN VIEW

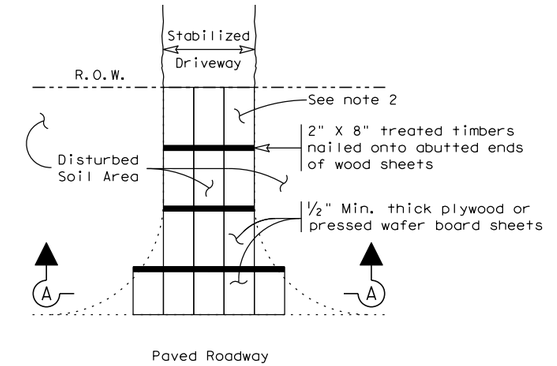

PLAN VIEW

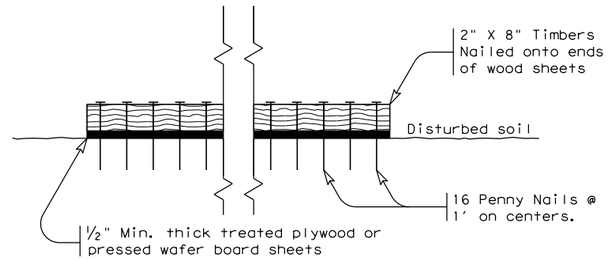

SECTION A-A

CONSTRUCTION EXIT (TYPE 3)

SHORT TERM

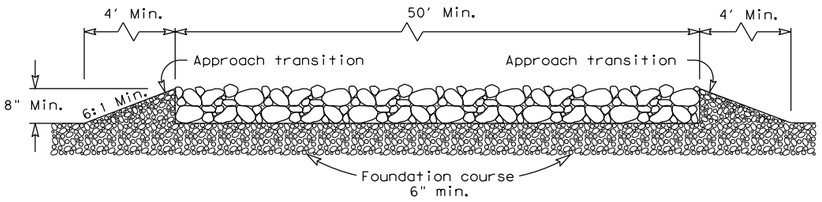

ELEVATION VIEW

CONSTRUCTION EXIT (TYPE 1)

ROCK CONSTRUCTION (LONG TERM)

GENERAL NOTES (TYPE 1)

1. The length of the type 1 construction exit shall be as indicated on the plans, but not less than 50'.
2. The coarse aggregate should be open graded with a size of 4" to 8".
3. The approach transitions should be no steeper than 6:1 and constructed as directed by the Engineer.
4. The construction exit foundation course shall be flexible base, bituminous concrete, portland cement concrete or other materialas approved by the Engineer.
5. The construction exit shall be graded to allow drainage to a sediment trapping device.
6. The guidelines shown hereon are suggestions only and may be modified by the Engineer.
7. Construct exits with a width of at least 14 ft. for one-way and 20 ft. for two-way traffic for the full width of the exit, or as directed by the engineer.

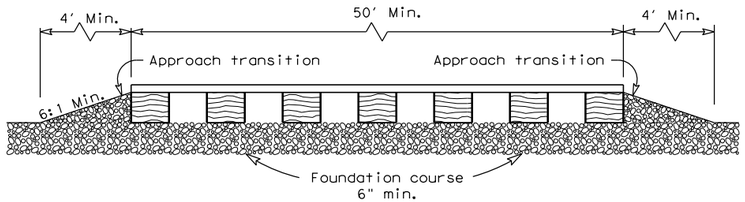

ELEVATION VIEW

CONSTRUCTION EXIT (TYPE 2)

TIMBER CONSTRUCTION (LONG TERM)

GENERAL NOTES (TYPE 2)

1. The length of the type 2 construction exit shall be as indicated on the plans, but not less than 50'.
2. The treated timber planks shall be attached to the railroad ties with ½"x 6" min. lag bolts. Other fasteners may be used as approved by the Engineer.
3. The treated timber planks shall be #2 grade min., and should be free from large and loose knots.
4. The approach transitions shall be no steeper than 6:1 and constructed as directed by the Engineer.
5. The construction exit foundation course shall be flexible base, bituminous concrete, portland cement concrete or other material as approved by the Engineer.
6. The construction exit should be graded to allow drainage to a sediment trapping device.
7. The guidelines shown hereon are suggestions only and may be modified by the Engineer.
8. Construct exits with a width of at least 14 ft. for one-way and 20 ft. for two-way traffic for the full width of the exit, or as directed by the engineer.

GENERAL NOTES (TYPE 3)

1. The length of the type 3 construction exit shall be as shown on the plans, or as directed by the Engineer.
2. The type 3 construction exit may be constructed from open graded crushed stone with a size of two to four inches spread a min. of 4" thick to the limits shown on the plans.
3. The treated timber planks shall be #2 grade min., and should be free from large and loose knots.
4. The guidelines shown hereon are suggestions only and may be modified by the Engineer.

Texas Department of Transportation

Design Division Standard

TEMPORARY EROSION, SEDIMENT AND WATER POLLUTION CONTROL MEASURES

CONSTRUCTION EXITS

EC(3)-16

FILE: ec316	DN: TxDOT	CK: KM	DW: VP	DN/CK: LS	
©TxDOT: JULY 2016	CONT	SECT	JOB	HIGHWAY	
REVISIONS				KLEIN RD	
	DIST	COUNTY		SHEET NO.	
	SAT	GUADALUPE		291	

DISCLAIMER:
The use of this standard is governed by the "Texas Engineering Practice Act". No warranty of any kind is made by TxDOT for any purpose whatsoever. TxDOT assumes no responsibility for the conversion of this standard to other formats or for incorrect results or damages resulting from its use.

DATE: 1/9/2020
FILE: H:\projects\510\30\03\Design\Civil\Standards\SW3P\ec916.dgn

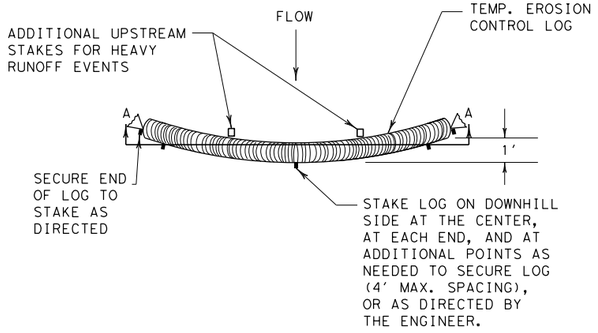

PLAN VIEW

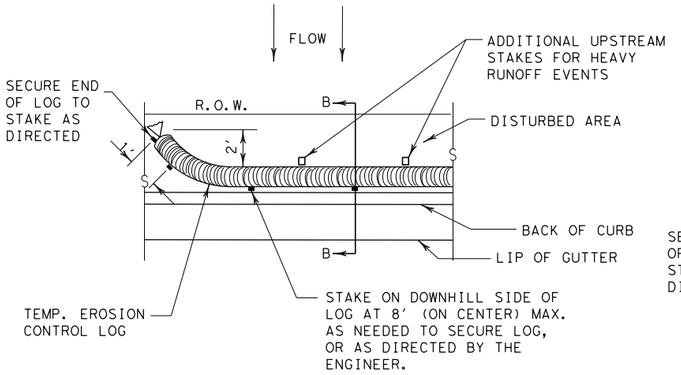

PLAN VIEW

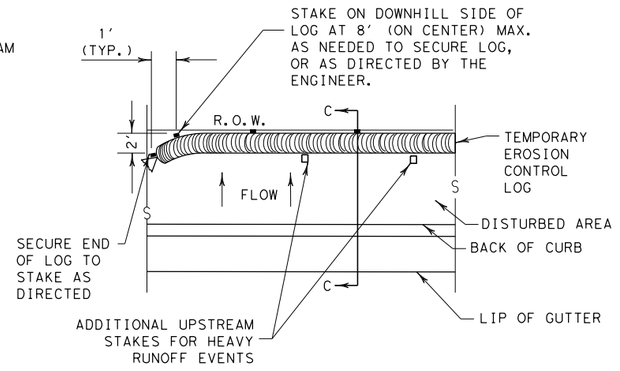

PLAN VIEW

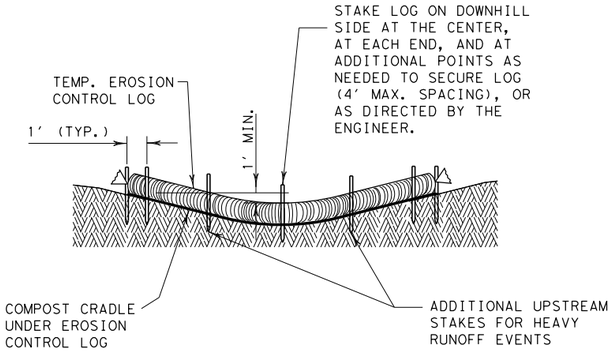

SECTION A-A

EROSION CONTROL LOG DAM

CL-D

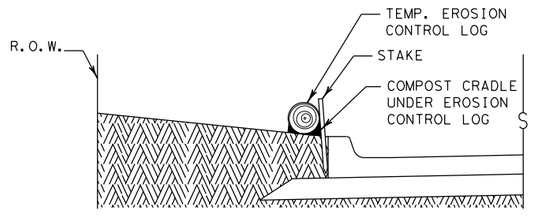

SECTION B-B

EROSION CONTROL LOG AT BACK OF CURB

CL-BOC

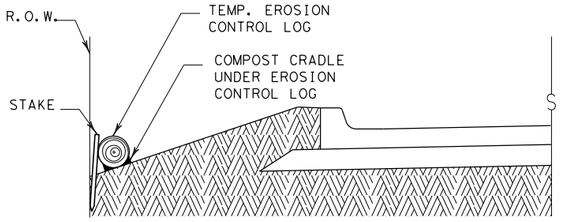

SECTION C-C

EROSION CONTROL LOG AT EDGE OF RIGHT-OF-WAY

CL-ROW

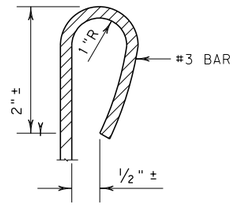

REBAR STAKE DETAIL

LEGEND

- CL-D — EROSION CONTROL LOG DAM
- CL-BOC — EROSION CONTROL LOG AT BACK OF CURB
- CL-ROW — EROSION CONTROL LOG AT EDGE OF RIGHT-OF-WAY
- CL-SST — EROSION CONTROL LOGS ON SLOPES STAKE AND TRENCHING ANCHORING
- CL-SSL — EROSION CONTROL LOGS ON SLOPES STAKE AND LASHING ANCHORING
- CL-DI — EROSION CONTROL LOG AT DROP INLET
- CL-CI — EROSION CONTROL LOG AT CURB INLET
- CL-GI — EROSION CONTROL LOG AT CURB & GRATE INLET

GENERAL NOTES:

1. EROSION CONTROL LOGS SHALL BE INSTALLED IN ACCORDANCE WITH MANFACTURER'S RECOMMENDATIONS, OR AS DIRECTED BY THE ENGINEER.
2. LENGTHS OF EROSION CONTROL LOGS SHALL BE IN ACCORDANCE WITH MANUFACTURER'S RECOMMENDATIONS AND AS REQUIRED FOR THE PURPOSE INTENDED.
3. UNLESS OTHERWISE DIRECTED, USE BIODEGRADABLE OR PHOTODEGRADABLE CONTAINMENT MESH ONLY WHERE LOG WILL REMAIN IN PLACE AS PART OF A VEGETATIVE SYSTEM. FOR TEMPORARY INSTALLATIONS, USE RECYCLABLE CONTAINMENT MESH.
4. FILL LOGS WITH SUFFICIENT FILTER MATERIAL TO ACHIEVE THE MINIMUM COMPACTED DIAMETER SPECIFIED IN THE PLANS WITHOUT EXCESSIVE DEFORMATION.
5. STAKES SHALL BE 2" X 2" WOOD OR #3 REBAR, 2'-4' LONG, EMBEDDED SUCH THAT 2" PROTRUDES ABOVE LOG, OR AS DIRECTED BY THE ENGINEER.
6. DO NOT PLACE STAKES THROUGH CONTAINMENT MESH.
7. COMPOST CRADLE MATERIAL IS INCIDENTAL & WILL NOT BE PAID FOR SEPARATELY.
8. SANDBAGS USED AS ANCHORS SHALL BE PLACED ON TOP OF LOGS & SHALL BE OF SUFFICIENT SIZE TO HOLD LOGS IN PLACE.
9. TURN THE ENDS OF EACH ROW OF LOGS UPSLOPE TO PREVENT RUNOFF FROM FLOWING AROUND THE LOG.
10. FOR HEAVY RUNOFF EVENTS, ADDITIONAL UPSTREAM STAKES MAY BE NECESSARY TO KEEP LOG FROM FOLDING IN ON ITSELF.

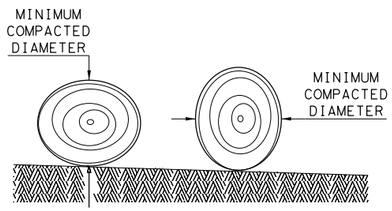

DIAMETER MEASUREMENTS OF EROSION CONTROL LOGS SPECIFIED IN PLANS

SEDIMENT BASIN & TRAP USAGE GUIDELINES

An erosion control log sediment trap may be used to filter sediment out of runoff draining from an unstabilized area.

Log Traps: The drainage area for a sediment trap should not exceed 5 acres. The trap capacity should be 1800 CF/Acre (0.5" over the drainage area).

Control logs should be placed in the following locations:

1. Within drainage ditches spaced as needed or min. 500' on center
2. Immediately preceding ditch inlets or drain inlets
3. Just before the drainage enters a water course
4. Just before the drainage leaves the right of way
5. Just before the drainage leaves the construction limits where drainage flows away from the project.

The logs should be cleaned when the sediment has accumulated to a depth of 1/2 the log diameter.

Cleaning and removal of accumulated sediment deposits is incidental and will not be paid for separately.

Texas Department of Transportation

Design Division Standard

TEMPORARY EROSION, SEDIMENT AND WATER POLLUTION CONTROL MEASURES

EROSION CONTROL LOG

EC(9)-16

FILE: ec916	DN: TxDOT	CK: KM	DW: LS/PT	CK: LS	
© TxDOT: JULY 2016	CONT	SECT	JOB	HIGHWAY	
REVISIONS				KLEIN RD	
	DIST	COUNTY		SHEET NO.	
	SAT	GUADALUPE		292	

DISCLAIMER:
The use of this standard is governed by the "Texas Engineering Practice Act". No warranty of any kind is made by TxDOT for any purpose whatsoever. TxDOT assumes no responsibility for the conversion of this standard to other formats or for incorrect results or damages resulting from its use.

DATE: 1/9/2020
FILE: H:\projects\510\30\03\Design\Civil\Standards\SW3P\ec916.dgn

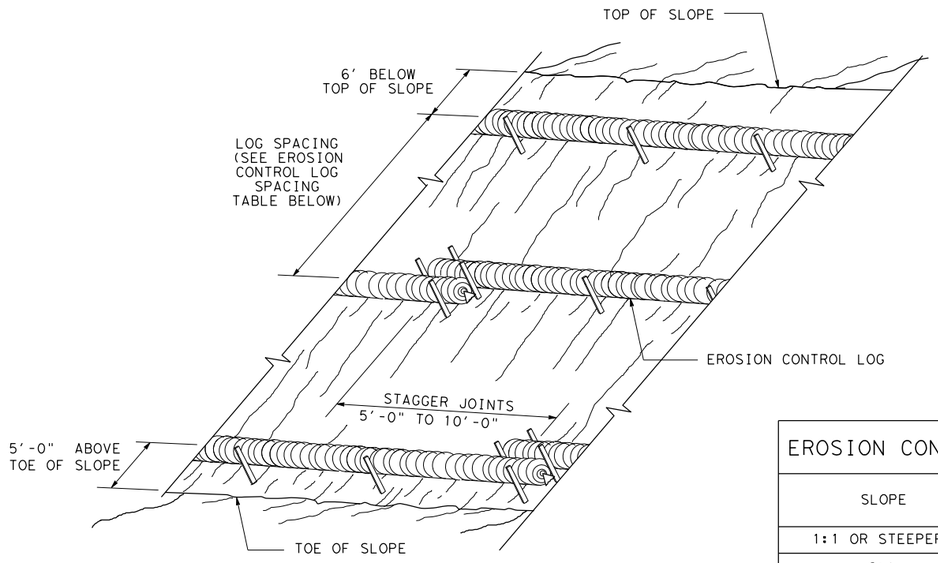

EROSION CONTROL LOGS ON SLOPES
STAKE AND TRENCHING ANCHORING

CL-SST

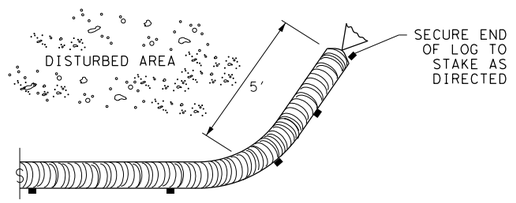

END SECTION RAP DETAIL

EROSION CONTROL LOG SPACING TABLE				
SLOPE	LOG DIAMETER			
	6"	8"	12"	18"
1:1 OR STEEPER	5'	10'	15'	20'
2:1	10'	20'	30'	40'
3:1	15'	30'	45'	60'
4:1 OR FLATTER	20'	40'	60'	80'

* ADJUSTMENTS CAN BE MADE FOR SOIL TYPE:
SOFT, LOAMY SOILS-ADJUST ROWS CLOSER TOGETHER;
HARD, ROCKY SOILS- ADJUST ROWS FARTHER APART

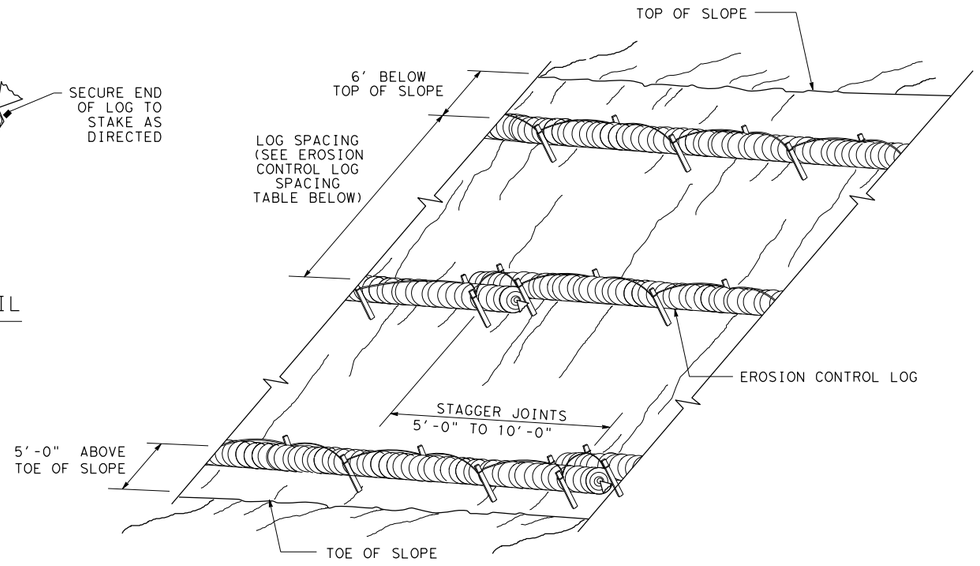

EROSION CONTROL LOGS ON SLOPES
STAKE AND LASHING ANCHORING

CL-SSL

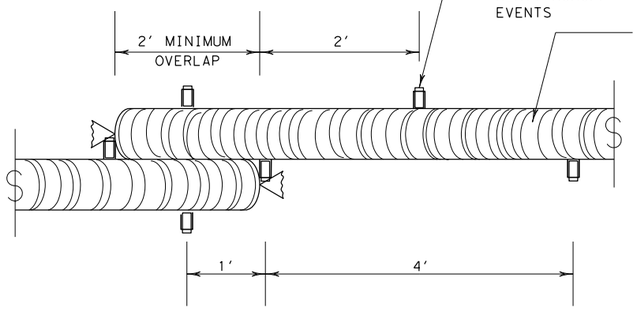

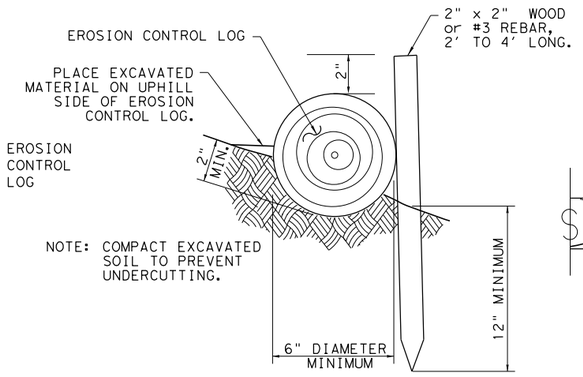

STAKE AND TRENCHING ANCHORING DETAIL

CL-SST

TRENCH DEPTH TABLE	
LOG DIAMETER	DEPTH
6"	2"
8"	3"
12"	4"
18"	5"

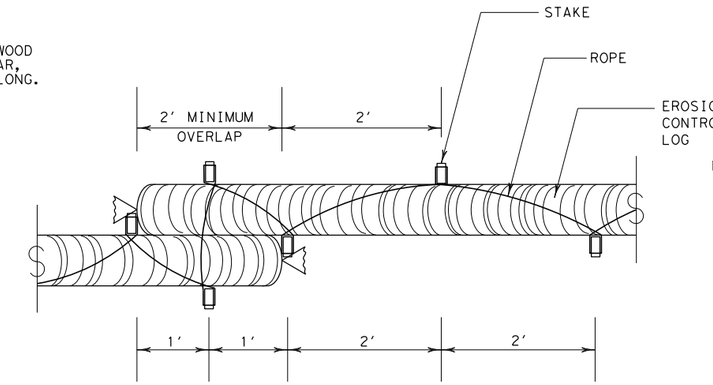

STAKE AND LASHING ANCHORING DETAIL

CL-SSL

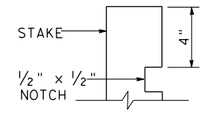

STAKE NOTCH DETAIL

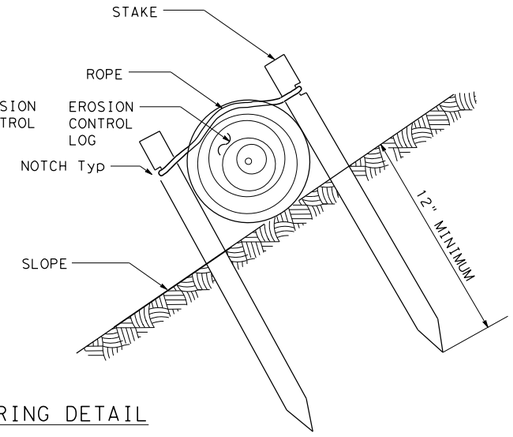

Texas Department of Transportation | Design Division Standard

TEMPORARY EROSION, SEDIMENT AND WATER POLLUTION CONTROL MEASURES

EROSION CONTROL LOG

EC(9)-16

FILE: ec116	DN: TxDOT		CK: KM		DW: LS/PT	CK: LS
© TxDOT: JULY 2016	CONT	SECT	JOB		HIGHWAY	
REVISIONS					KLEIN RD	
	DIST	COUNTY			SHEET NO.	
	SAT	GUADALUPE			293	

DISCLAIMER:
The use of this standard is governed by the "Texas Engineering Practice Act". No warranty of any kind is made by TxDOT for any purpose whatsoever. TxDOT assumes no responsibility for the conversion of this standard to other formats or for incorrect results or damages resulting from its use.

DATE: 1/9/2020
FILE: H:\projects\510\30\03\Design\Civil\Standards\SW3P\ec916.dgn

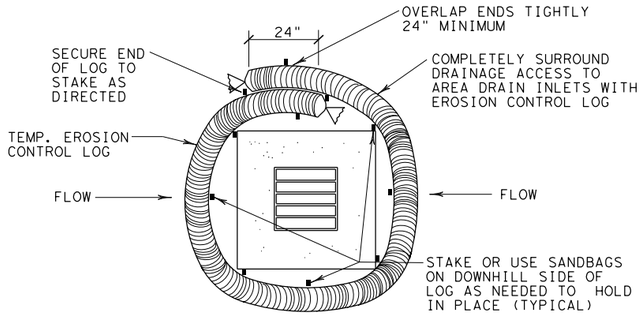

EROSION CONTROL LOG AT DROP INLET

CL-DI

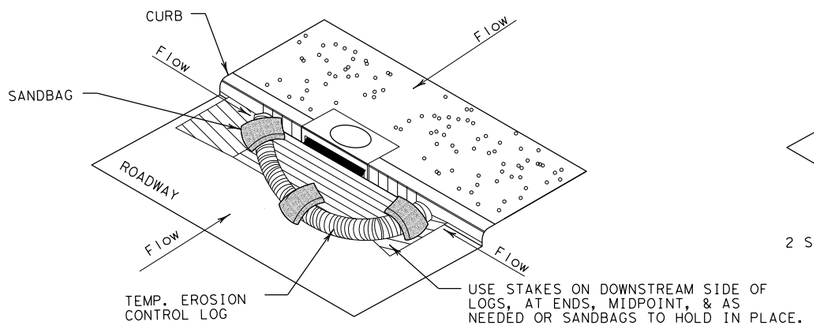

EROSION CONTROL LOG AT CURB INLET

CL-CI

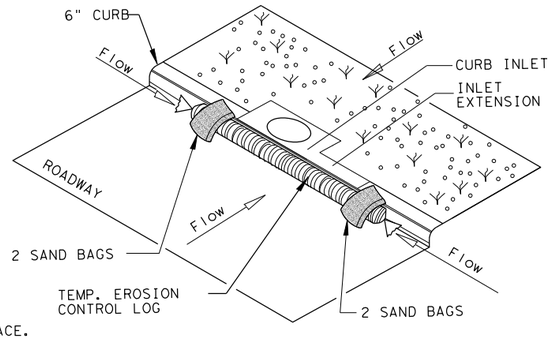

EROSION CONTROL LOG AT CURB INLET

CL-CI

NOTE:
EROSION CONTROL LOGS USED AT CURB INLETS SHOULD ONLY BE USED IF THEY WILL NOT IMPEDE TRAFFIC OR FLOOD THE ROADWAY OR WHEN THE STORM SEWER SYSTEM IS NOT FULLY FUNCTIONAL.

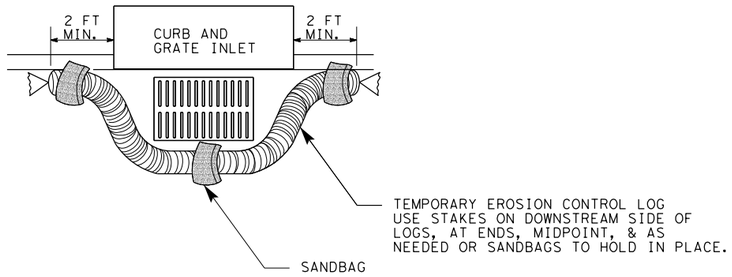

EROSION CONTROL LOG AT CURB & GRADE INLET

CL-GI

SECTION B-B

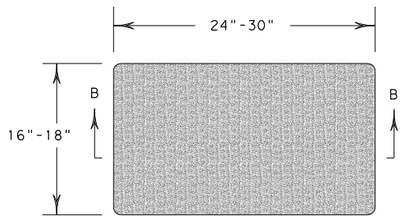

SANDBAG DETAIL

Texas Department of Transportation

Design Division Standard

TEMPORARY EROSION, SEDIMENT AND WATER POLLUTION CONTROL MEASURES

EROSION CONTROL LOG

EC(9)-16

FILE: ec916	DN: TxDOT	CK: KM	DW: LS/PT	CK: LS			
© TxDOT: JULY 2016	CONT	SECT	JOB	HIGHWAY			
REVISIONS				KLEIN RD			
	DIST	COUNTY		SHEET NO.			
	SAT	GUADALUPE		294			

Plotted on: 1/9/2020

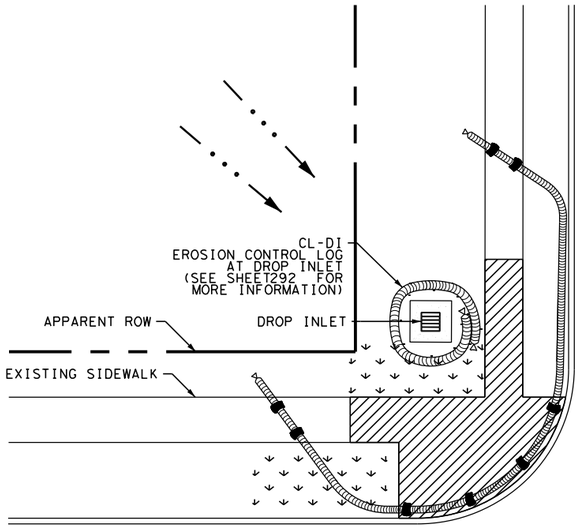

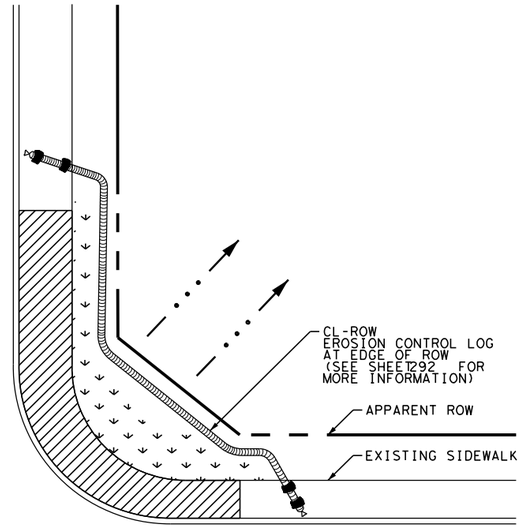

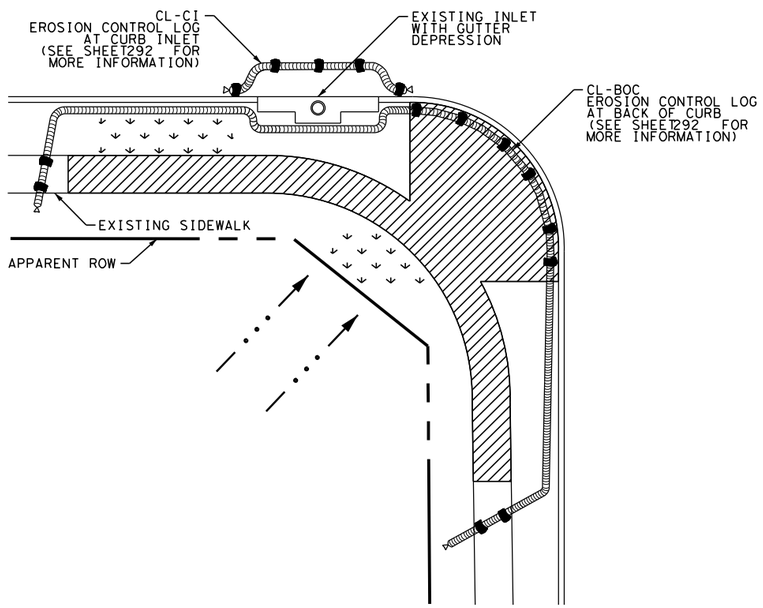

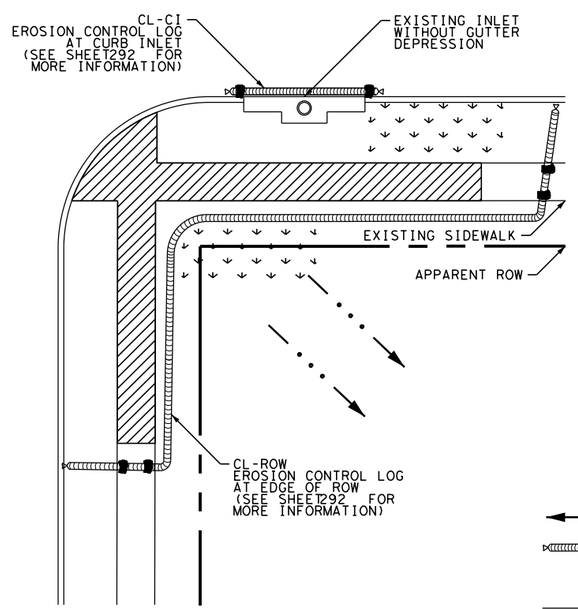

LEGEND

- SODDING
- FLOW DIRECTION
- EROSION CONTROL LOG
- SANDBAGS
- EXISTING FEATURES
- PROPOSED WORK AREA

NOTES:

SITE CONDITIONS MAY DICTATE ADDITIONAL COUNTERMEASURES AS DIRECTED BY THE ENGINEER.

USE ADDITIONAL STAKES OR SAND BAGS AS NEEDED TO HOLD IN PLACE (NSPI).

INSTALLATION OF COUNTERMEASURES MUST BE APPROVED BY THE ENGINEER PRIOR TO PLACEMENT.

DESIGN

INTERIM REVIEW

DOCUMENT INCOMPLETE. NOT INTENDED FOR PERMIT, BIDDING OR CONSTRUCTION.
ENGINEER: TYLER PAYNE DUBE
P.E. SERIAL NO: 118612
DATE: 1/9/2020

APPROVAL

INTERIM REVIEW

DOCUMENT INCOMPLETE. NOT INTENDED FOR PERMIT, BIDDING OR CONSTRUCTION.
ENGINEER: JOHN A. TYLER
P.E. SERIAL NO: 105193
DATE: 1/9/2020

NOT TO SCALE

REV. NO.	DATE	DESCRIPTION	BY

PAPE-DAWSON ENGINEERS
SAN ANTONIO | AUSTIN | HOUSTON | FORT WORTH | DALLAS
2000 NW LOOP 410 | SAN ANTONIO, TX 78213 | 210.375.9000
TBPE FIRM REGISTRATION #470 | TBPLS FIRM REGISTRATION #10028800

City of New Braunfels

KLEIN RD PHASE 2

SWPPP EXAMPLE INTERSECTION

SHEET 1 OF 1

DGN:	STATE	PROJECT NO.	ROADWAY
CHK DGN:	TEXAS	NB 18-026	KLEIN RD
DWG:	COUNTY	CITY	SHEET NO.
CHK DWG:	GUADALUPE	NEW BRAUNFELS	295

Design Filename: H:\projects\510\30\03\Design\Civil\General\5103003_sw3pex01.dgn

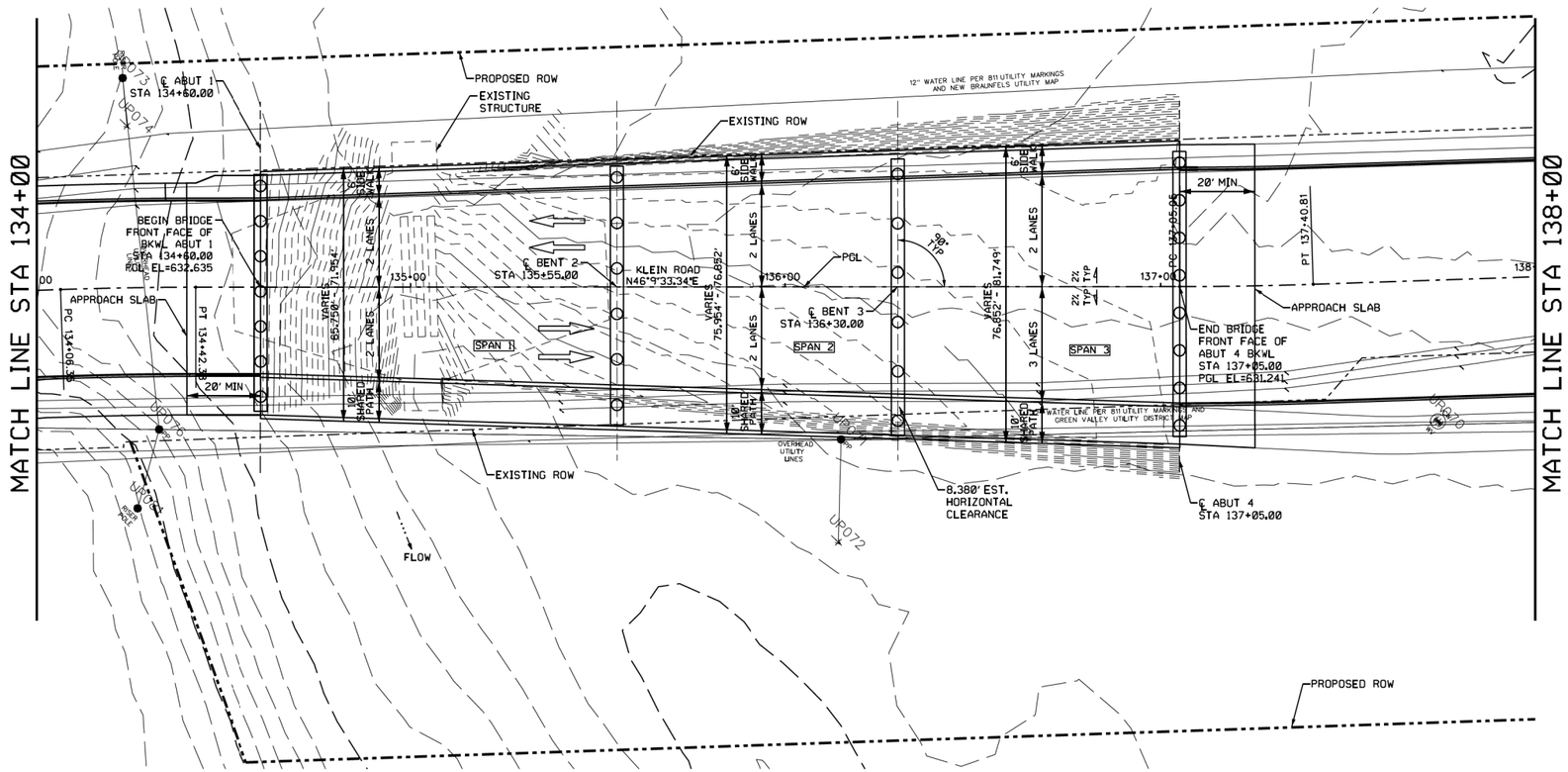

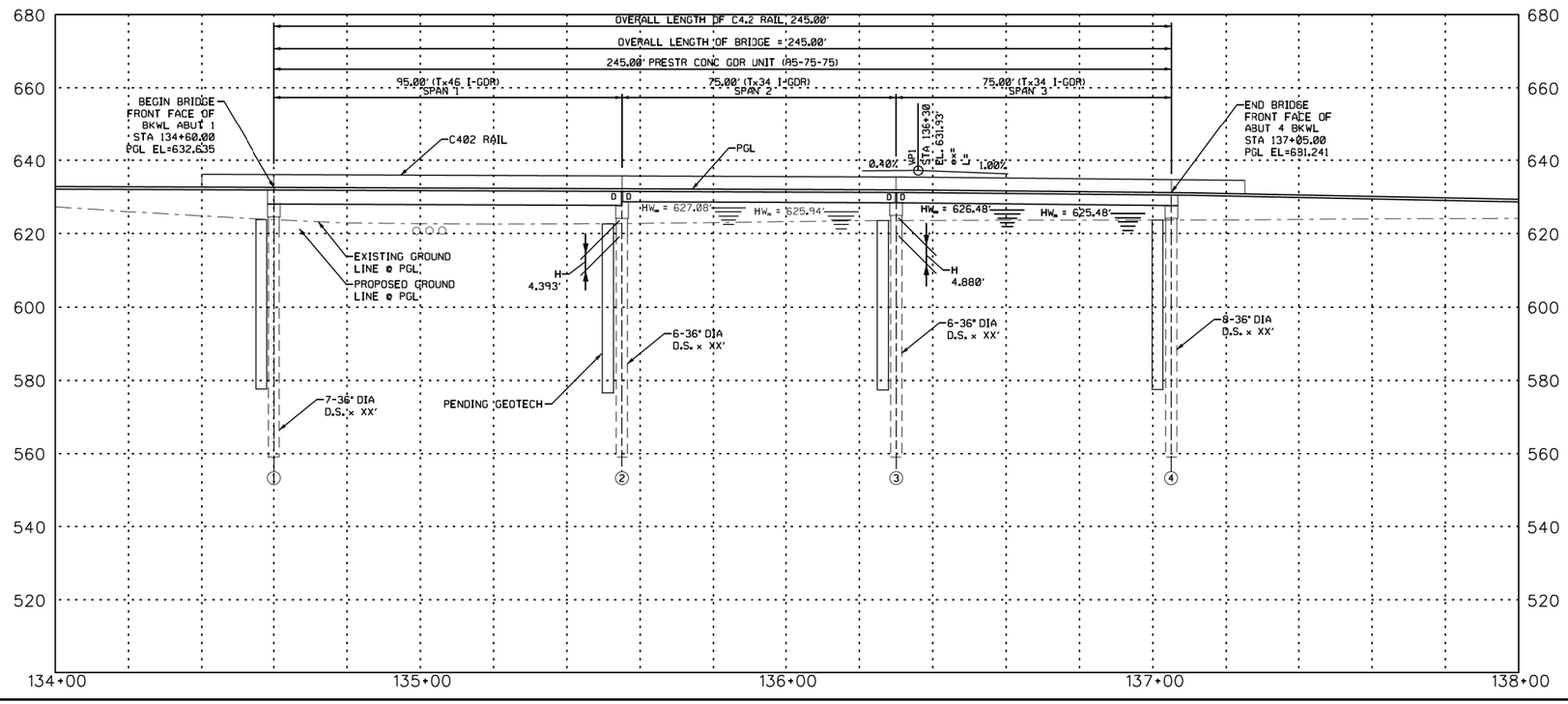

0' 20' 40'
H & V SCALE IN FEET

GENERAL NOTES:
1. BRIDGE DESIGNED TO AASHTO LRFD BRIDGE DESIGN SPECIFICATIONS, 7TH ED (2017) PLUS 2016 AND 2017 INTERIM.
2. SEE SHEET x FOR TYPICAL SECTION.
3. SEE TEST HOLE DATA SHEETS FOR BORING DETAILS NOT SHOWN.
4. SEE CSAB STANDARD FOR CEMENT STABILIZED BACKFILL DETAILS.
5. THE 'H' VALUES SHOWN ARE ESTIMATED COLUMN HEIGHTS. THE CONTRACTOR IS RESPONSIBLE FOR CALCULATING THE ACTUAL COLUMN HEIGHTS BASE ON FIELD CONDITIONS.
6. REFER TO ALIGNMENT DATA SHEETS FOR MORE INFORMATION.
7. REFER TO RETAINING WALL SHEETS FOR WALL LAYOUT AND DETAILS.

HL93 LOADING
NBI XXXXXXXXXX

THIS DOCUMENT IS RELEASED FOR THE PURPOSE OF PRELIMINARY REVIEW UNDER THE AUTHORITY OF AJM STONE, P.E. 91048 ON 09/23/19 IT IS NOT TO BE USED FOR CONSTRUCTION OR PERMIT PURPOSES.

M&S ENGINEERING
CIVIL | ELECTRICAL | STRUCTURAL | MEP
TEXAS PROFESSIONAL ENGINEERING FIRM # F-1394
WWW.MSENGR.COM | (830) 228-5446

REV.NO.	DATE	DESCRIPTION	BY

PAPE-DAWSON ENGINEERS
SAN ANTONIO | AUSTIN | HOUSTON | FORT WORTH | DALLAS
2000 NW LOOP 410 | SAN ANTONIO, TX 78213 | 210.375.9000
TBPE FIRM REGISTRATION #470 | TBPLS FIRM REGISTRATION #10028800

City of New Braunfels

KLEIN RD PH 2

BRIDGE LAYOUT

BRIDGE PLAN AND PROFILE

STA 134+60 TO STA 137+05

SHEET 1 OF 1

DGN:	STATE	PROJECT NO.	HIGHWAY NO.
CHK DGN:	TEXAS	19PDENG014	KLEIN
DWG:	COUNTY		SHEET NO.
CHK DWG:	GUADALUPE		296

Plotted on $DATE$

Design Filename: 19PDENG014-BRIDGE P&P.dgn

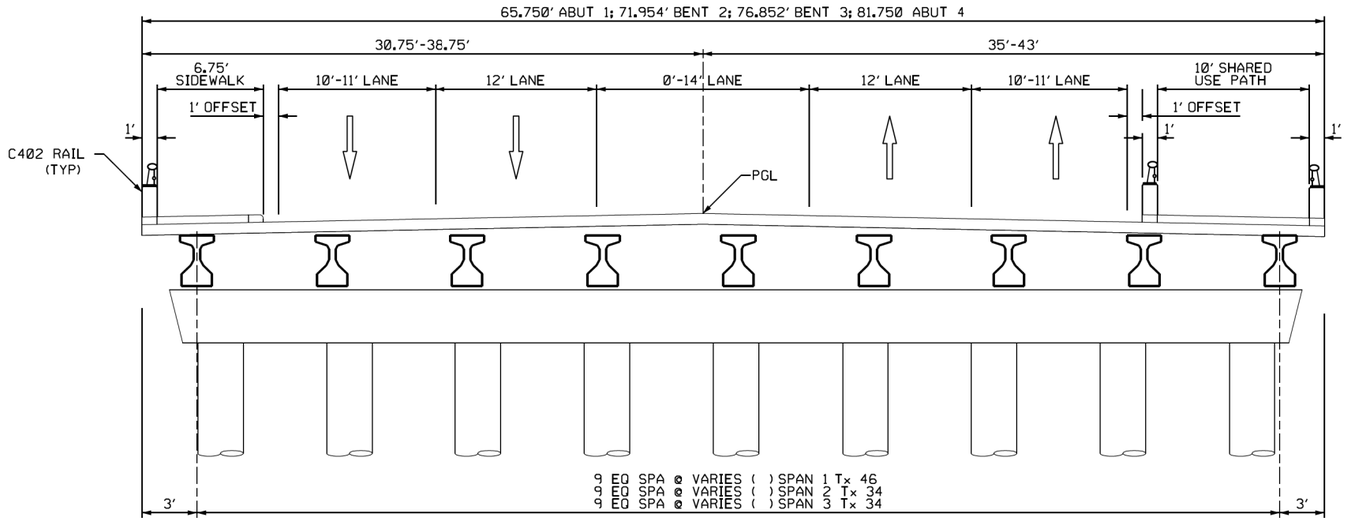

TYPICAL SECTION
STA 134+60 - STA 137+05

THIS DOCUMENT IS RELEASED FOR THE PURPOSE OF PRELIMINARY REVIEW UNDER THE AUTHORITY OF A.M. STONE, P.E. 91049 ON 09/23/19 IT IS NOT TO BE USED FOR CONSTRUCTION OR PERMIT PURPOSES.

M&S ENGINEERING
CIVIL | ELECTRICAL | STRUCTURAL | MEP
TEXAS PROFESSIONAL ENGINEERING FIRM # F-1394
WWW.MSENGR.COM | (830) 228-5446

REV.NO.	DATE	DESCRIPTION	BY

PAPE-DAWSON ENGINEERS
SAN ANTONIO | AUSTIN | HOUSTON | FORT WORTH | DALLAS
2000 NW LOOP 410 | SAN ANTONIO, TX 78213 | 210.375.9000
TBPE FIRM REGISTRATION #470 | TBPLS FIRM REGISTRATION #10028800

City of New Braunfels

KLEIN RD PH 2

BRIDGE LAYOUT

TYPICAL SECTIONS

STA 134+60 TO STA 137+05

SHEET 1 OF

DGN:	STATE	PROJECT NO.	HIGHWAY NO.
CHK DGN:	TEXAS	19PDENG014	KLEIN
DWG:	COUNTY		SHEET NO.
CHK DWG:	GUADALUPE		297

Plotted on: $DATE$

Design Filename: 19PDENG014-TYP SECTIONS.dgn

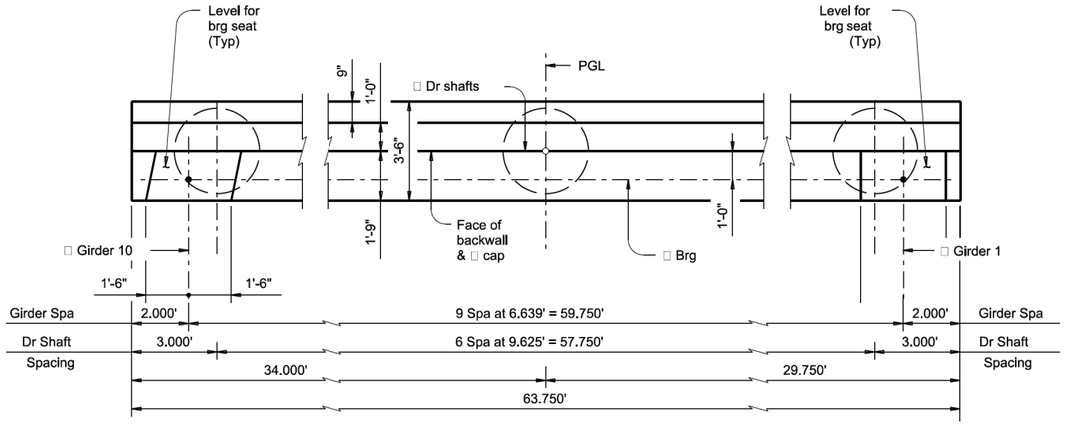

PLAN

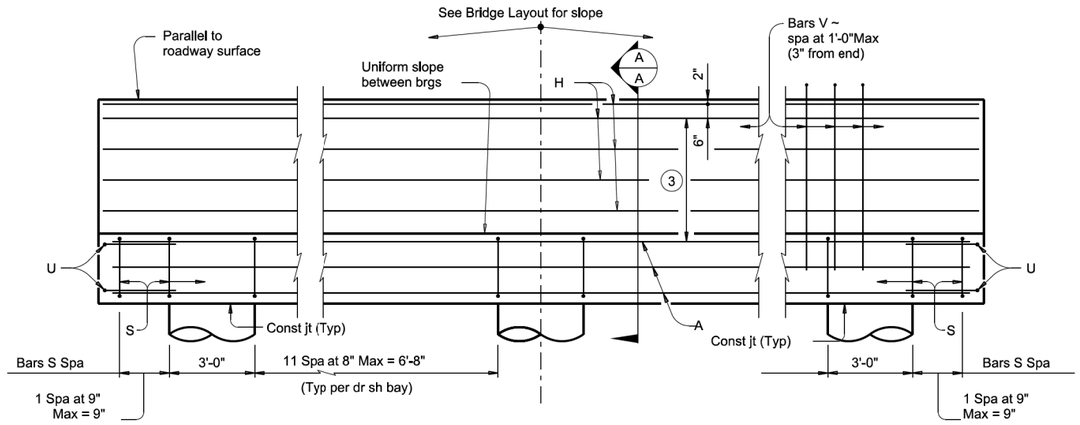

ELEVATION

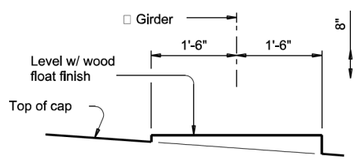

BEARING SEAT DETAIL

(Bearing surface must be clean and free of all loose material before placing bearing pad.)

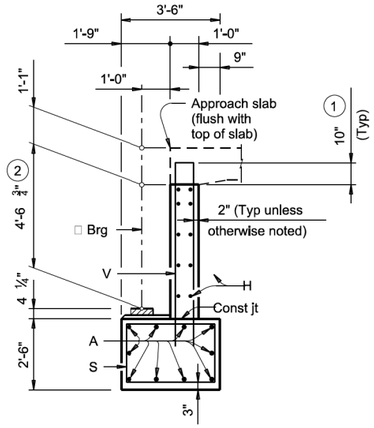

SECTION A-A

(With approach slab) 3

1. Increase as required to maintain 3" from finished grade.
2. See Span details for "Y" value.
3. Spacing based on girder type: Tx46 ~ 4 spaces at 1'-0" Max

* Includes Lap Splice

TYPE Tx46 GIRDERS

Bar	No.	Size	Length + Lap	Weight
A*	10	#11	72'-7"	3,856
H*	10	#6	66'-7"	1000
S	76	#5	11'-6"	912
U	4	#6	8'-1"	49
V	64	#5	14'-4"	957
Reinforcing Steel			Lb	6773
Class "C" Concrete (Cap)			CY	31.6

LAP SPLICING

Bar Size No.	Uncoated Lap Length	Coated Lap Length
3	1'-4"	2'-0"
4	1'-9"	2'-8"
5	2'-2"	3'-3"
6	2'-7"	3'-11"
7	3'-5"	5'-2"
8	4'-6"	6'-9"
9	5'-8"	8'-6"
10	7'-3"	10'-11"
11	8'-11"	13'-5"

GENERAL NOTES:

Designed according to AASHTO LRFD Bridge Design Specifications.
See Bridge Layout for header slope and foundation type, size and length.
See Common Foundation Details (FD) standard sheet for all foundation details and notes.

Cover dimensions are clear dimensions, unless noted otherwise.
Reinforcing bar dimensions shown are out-to-out of bar.

MATERIAL NOTES:

Provide Class C concrete (f'c = 3,600 psi).
Provide Class C (HPC) concrete if shown elsewhere in the plans.
Provide Grade 60 reinforcing steel.
Galvanize dowel bars D.

THIS DOCUMENT IS RELEASED FOR THE PURPOSE OF PRELIMINARY REVIEW UNDER THE AUTHORITY OF A.M. STONE, P.E. 91049 ON 09/23/19 IT IS NOT TO BE USED FOR CONSTRUCTION OR PERMIT PURPOSES.

M&S ENGINEERING
CIVIL | ELECTRICAL | STRUCTURAL | MEP
TEXAS PROFESSIONAL ENGINEERING FIRM # F-1394
WWW.MSENGR.COM | (830) 228-5446

REV.NO.	DATE	DESCRIPTION	BY

PAPE-DAWSON ENGINEERS
SAN ANTONIO | AUSTIN | HOUSTON | FORT WORTH | DALLAS
2000 NW LOOP 410 | SAN ANTONIO, TX 78213 | 210.375.9000
TBPE FIRM REGISTRATION #470 | TBPLS FIRM REGISTRATION #10028800

City of New Braunfels

KLEIN RD PH 2

ABUTMENT #1 DETAILS

STA 134+60

SHEET 1 OF

DGN:	STATE	PROJECT NO.	HIGHWAY NO.
CHK DGN:	TEXAS	$PROJNUM$	HWY
DWG:	COUNTY		SHEET NO.
CHK DWG:	CTY		298

Plotted on: $DATE$
Design Filename: $FILE$

Plotted on: $DATE$

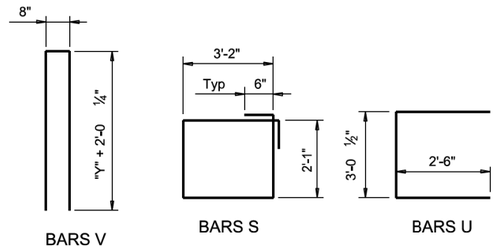

BARS V BARS S BARS U

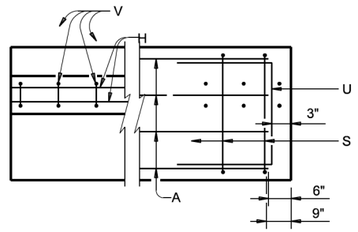

BACKWALL CAP

CORNER DETAILS

Design Filename: $FILE$

THIS DOCUMENT IS RELEASED FOR THE PURPOSE OF PRELIMINARY REVIEW UNDER THE AUTHORITY OF AJM STONE, P.E. 91581 ON 09/23/19 IT IS NOT TO BE USED FOR CONSTRUCTION OR PERMIT PURPOSES.

M&S ENGINEERING
CIVIL | ELECTRICAL | STRUCTURAL | MEP
TEXAS PROFESSIONAL ENGINEERING FIRM # F-1394
WWW.MSENGR.COM | (830) 228-5446

REV.NO.	DATE	DESCRIPTION	BY

PAPE-DAWSON ENGINEERS
SAN ANTONIO | AUSTIN | HOUSTON | FORT WORTH | DALLAS
2000 NW LOOP 410 | SAN ANTONIO, TX 78213 | 210.375.9000
TBPE FIRM REGISTRATION #470 | TBPLS FIRM REGISTRATION #10028800

City of New Braunfels

KLEIN RD PH 2

ABUTMENT #1 DETAILS

STA 134+60

SHEET 2 OF 2

DGN:	STATE	PROJECT NO.	HIGHWAY NO.
CHK DGN:	TEXAS	$PROJNUM$	HWY
DWG:	COUNTY		SHEET NO.
CHK DWG:	CTY		299

Plotted on: $DATE$

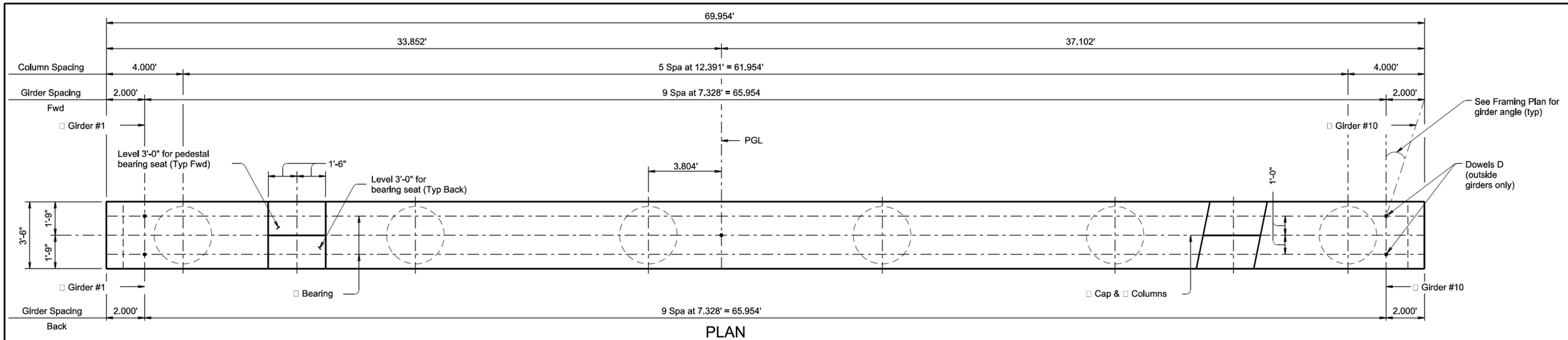

PLAN

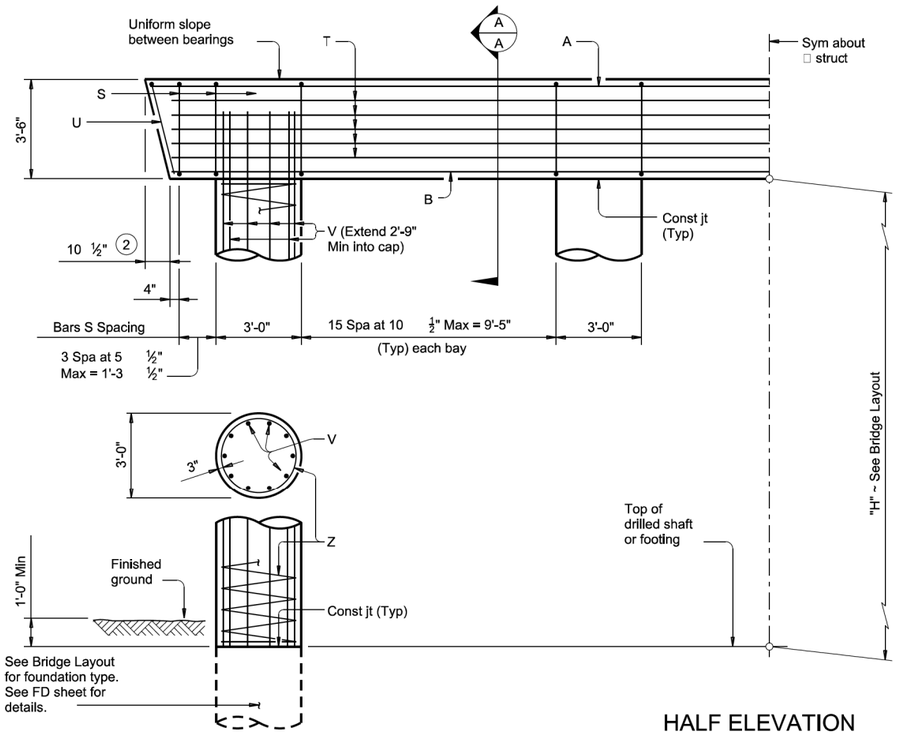

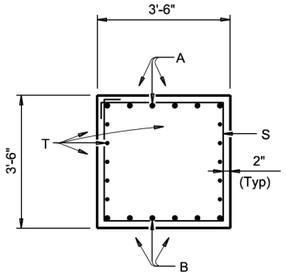

SECTION A-A

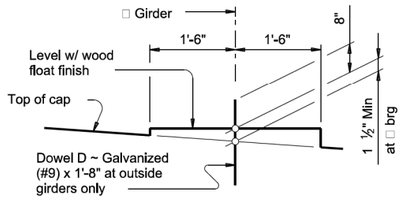

BEARING SEAT DETAIL

(Bearing surface must be clean and free of all loose material before placing bearing pad.)

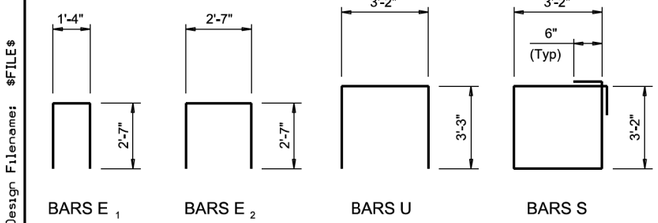

HALF ELEVATION

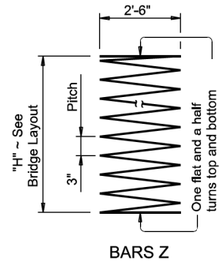

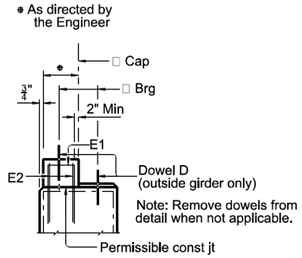

PEDESTAL SECTION

Remove all loose material and clean the bearing surface before placing the bearing pad

TABLE OF ESTIMATED CAP QUANTITIES (1)

Bar	No.	Size	Length	Weight
A*	6	#11	78'-9"	2,512
B*	6	#11	77'-0"	2,456
D	4	#9	1'-8"	23
E1	30	#5	6'-6"	203
E2	20	#5	7'-9"	162
S	98	#5	12'-7"	1286
T*	10	#5	77'-0"	804
U	2	#5	9'-8"	20
Reinforcing Steel			Lb	7,457
Class "C" Concrete (Cap)			CY	31.5

LAP SPLICING

Bar Size No.	Uncoated Lap Length	Coated Lap Length
3	1'-4"	2'-0"
4	1'-9"	2'-8"
5	2'-2"	3'-3"
6	2'-7"	3'-11"
7	3'-5"	5'-2"
8	4'-6"	6'-9"
9	5'-8"	8'-6"
10	7'-3"	10'-11"
11	8'-11"	13'-5"

TABLE OF ESTIMATED COLUMN QUANTITIES (1)

Bent	"H"	Bars V 30 - #9		Bars Z 3 - #4		Reinf Steel	Class "C" Conc (Col)
#	Height	Length + Lap	Weight	Length + Lap	Weight	LB	CY
2	10'	12'-9"	2601	337'-9"	1354	3955	31.50

(1) Quantities shown are based on an "H" value of 36'. For each linear foot variation in "H" value, make the following adjustments:
Bars V length, 1'-0"
Bars Z length, 31'-5"
Reinforcing steel, 220 Lb
Class "C" conc (col), 1.05 CY

(2) Measured parallel to top of cap cross-slope.

(*) Includes Lap Splice

GENERAL NOTES:

Designed according to AASHTO LRFD Bridge Design Specifications.
See Bridge Layout for foundation type, size and length.
See Common Foundation Details (FD) standard sheet for all foundation details and notes.
See Shear Key (IGSK) standard sheet for all shear key details and notes, if applicable.
These bent details may be used with standard SIG-44 only.

Cover dimensions are clear dimensions, unless noted otherwise.
Reinforcing bar dimensions shown are out-to-out of bar.

MATERIAL NOTES:

Provide Class C concrete (f'c = 3,600 psi).
Provide Grade 60 reinforcing steel.
Galvanize dowel bars D.

THIS DOCUMENT IS RELEASED FOR THE PURPOSE OF PRELIMINARY REVIEW UNDER THE AUTHORITY OF AJM. STONE, P.E. 91049 ON 09/23/19 IT IS NOT TO BE USED FOR CONSTRUCTION OR PERMIT PURPOSES.

M&S ENGINEERING
CIVIL | ELECTRICAL | STRUCTURAL | MEP
TEXAS PROFESSIONAL ENGINEERING FIRM # F-1394
WWW.MSENGR.COM | (830) 228-5446

REV.NO.	DATE	DESCRIPTION	BY

PAPE-DAWSON ENGINEERS
SAN ANTONIO | AUSTIN | HOUSTON | FORT WORTH | DALLAS
2000 NW LOOP 410 | SAN ANTONIO, TX 78213 | 210.375.9000
TBPE FIRM REGISTRATION #470 | TBPLS FIRM REGISTRATION #10028800

City of New Braunfels

KLEIN RD PH 2

BENT #2 DETAILS

STA 135+55

SHEET 1 OF

DGN:	STATE	PROJECT NO.	HIGHWAY NO.
CHK DGN:	TEXAS	$PROJNUM$	HWY
DW:	COUNTY		SHEET NO.
CHK DW:	CTY		300

Design Filename: $FILE$

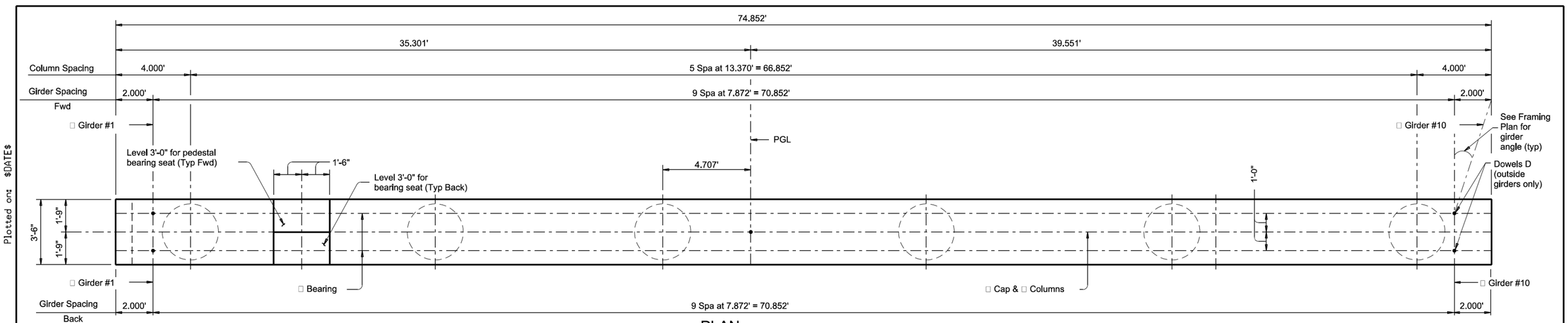

PLAN

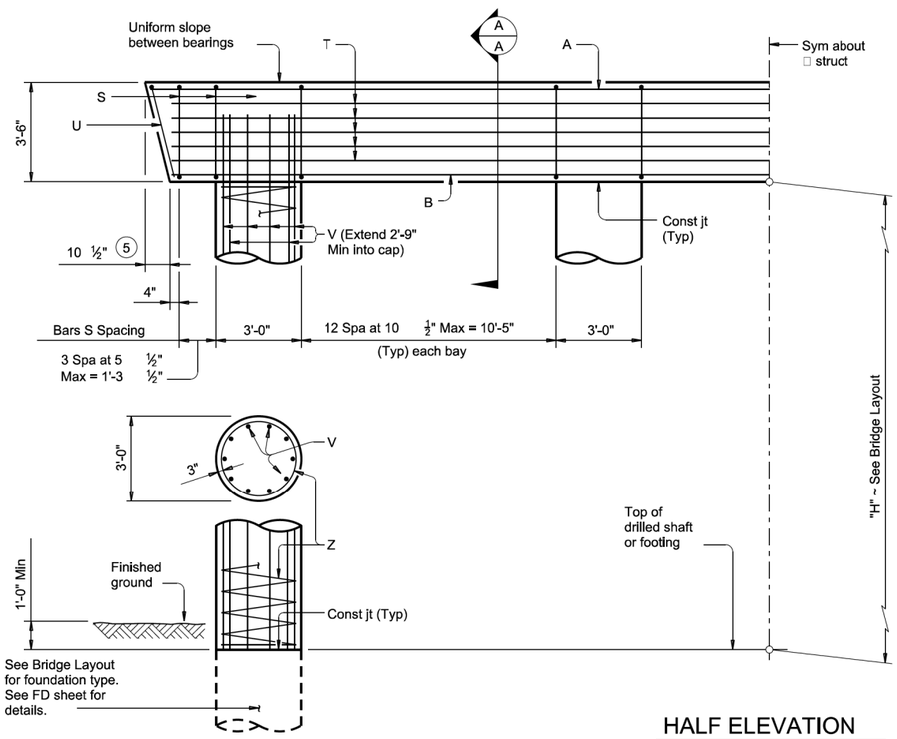

HALF ELEVATION

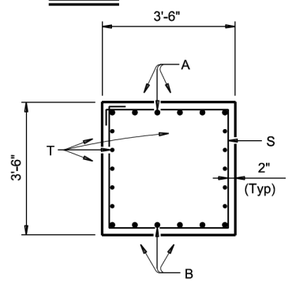

SECTION A-A

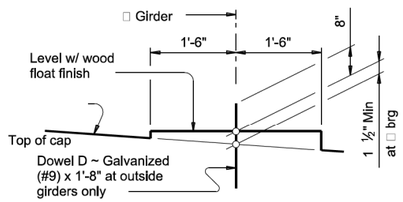

BEARING SEAT DETAIL

(Bearing surface must be clean and free of all loose material before placing bearing pad.)

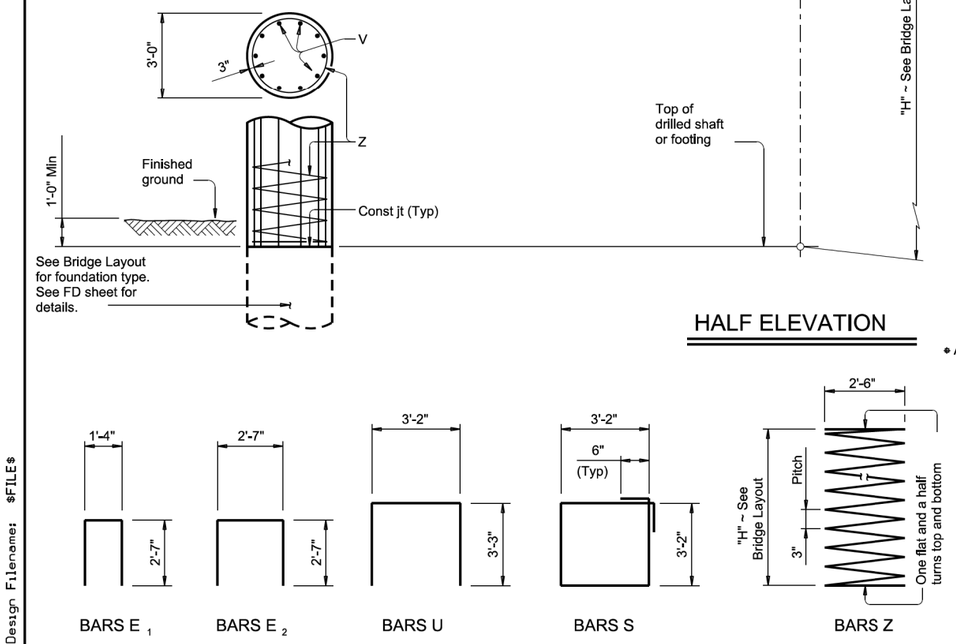

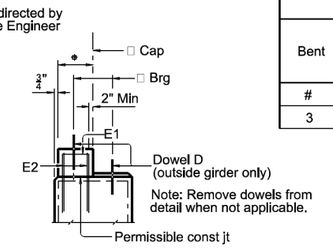

PEDESTAL SECTION

Remove all loose material and clean the bearing surface before placing the bearing pad

TABLE OF ESTIMATED CAP QUANTITIES (1)

Bar	No.	Size	Length	Weight
A*	6	#11	83'-9"	2,668
B*	6	#11	82'-0"	2,612
D	4	#9	1'-8"	23
E1	30	#5	6'-6"	203
E2	20	#5	7'-9"	162
S	73	#5	12'-7"	958
T*	10	#5	82'-0"	855
U	2	#5	9'-8"	20
Reinforcing Steel			Lb	7,500
Class "C" Concrete (Cap)			CY	33.7

LAP SPLICING

Bar Size No.	Uncoated Lap Length	Coated Lap Length
3	1'-4"	2'-0"
4	1'-9"	2'-8"
5	2'-2"	3'-3"
6	2'-7"	3'-11"
7	3'-5"	5'-2"
8	4'-6"	6'-9"
9	5'-8"	8'-6"
10	7'-3"	10'-11"
11	8'-11"	13'-5"

TABLE OF ESTIMATED COLUMN QUANTITIES (1)

Bent	"H"	Bars V 30 - #9		Bars Z 3 - #4		Reinf Steel	Class "C" Conc (Col)
#	Height	Length + Lap	Weight	Length + Lap	Weight	LB	CY
3	10'	12'-9"	2601	337'-9"	1354	3955	31.50

(1) Quantities shown are based on an "H" value of 36'. For each linear foot variation in "H" value, make the following adjustments:
Bars V length, 1'-0"
Bars Z length, 31'-5"
Reinforcing steel, 220 Lb
Class "C" conc (col), 1.05 CY

(2) Measured parallel to top of cap cross-slope.

(*) Includes Lap Splice

GENERAL NOTES:
Designed according to AASHTO LRFD Bridge Design Specifications.
See Bridge Layout for foundation type, size and length.
See Common Foundation Details (FD) standard sheet for all foundation details and notes.
See Shear Key (IGSK) standard sheet for all shear key details and notes, if applicable.

Cover dimensions are clear dimensions, unless noted otherwise.
Reinforcing bar dimensions shown are out-to-out of bar.

MATERIAL NOTES:
Provide Class C concrete (f'c = 3,600 psi).
Provide Grade 60 reinforcing steel.
Galvanize dowel bars D.

THIS DOCUMENT IS RELEASED FOR THE PURPOSE OF PRELIMINARY REVIEW UNDER THE AUTHORITY OF AJM.STONE, P.E. 91581 ON 09/23/19 IT IS NOT TO BE USED FOR CONSTRUCTION OR PERMIT PURPOSES.

M&S ENGINEERING
CIVIL | ELECTRICAL | STRUCTURAL | MEP
TEXAS PROFESSIONAL ENGINEERING FIRM # F-1394
WWW.MSENGR.COM | (830) 228-5446

REV.NO.	DATE	DESCRIPTION	BY

PAPE-DAWSON ENGINEERS
SAN ANTONIO | AUSTIN | HOUSTON | FORT WORTH | DALLAS
2000 NW LOOP 410 | SAN ANTONIO, TX 78213 | 210.375.9000
TBPE FIRM REGISTRATION #470 | TBPLS FIRM REGISTRATION #10028800

City of New Braunfels

KLEIN RD PH 2

BENT #3 DETAILS

STA 136+30

SHEET 1 OF

DGN:	STATE	PROJECT NO.	HIGHWAY NO.
CHK DGN:	TEXAS	$PROJNUM$	HWY
DW:	COUNTY		SHEET NO.
CHK DW:	CTY		301

Plotted on: $DATE$
Design Filename: $FILE$

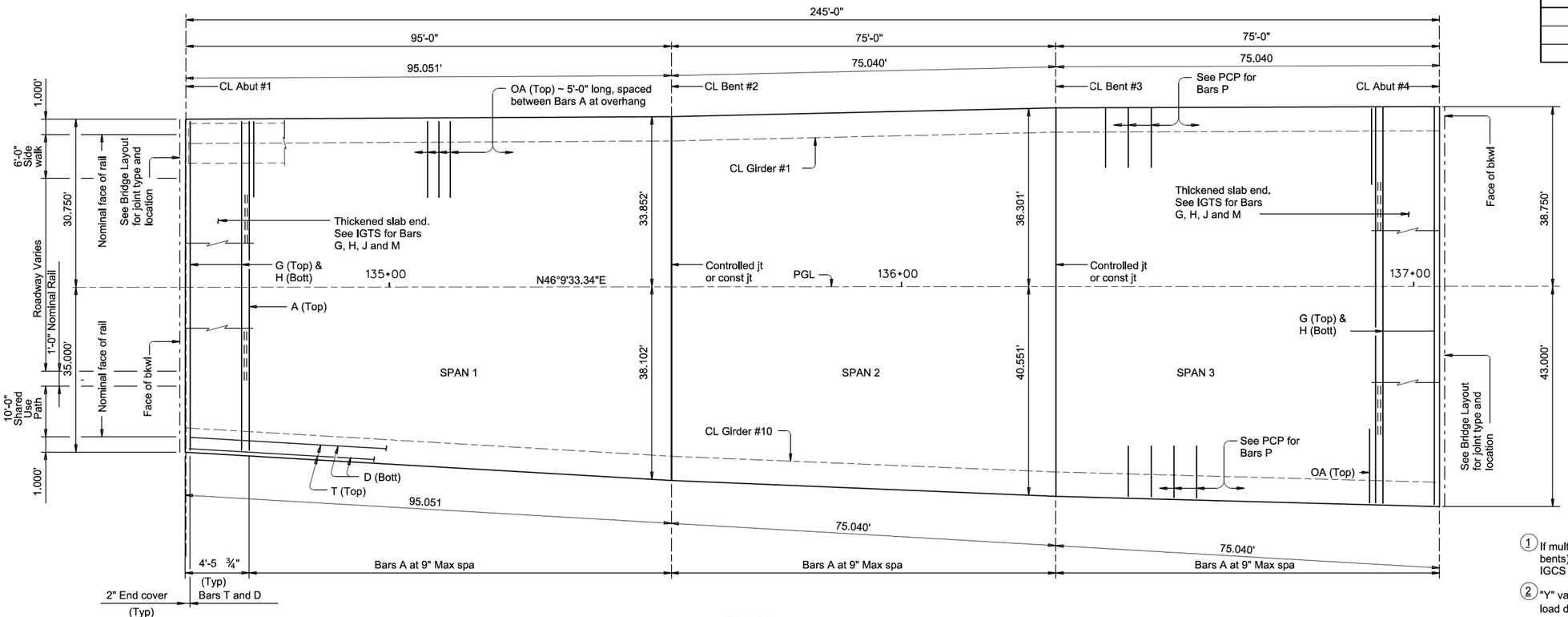

PLAN

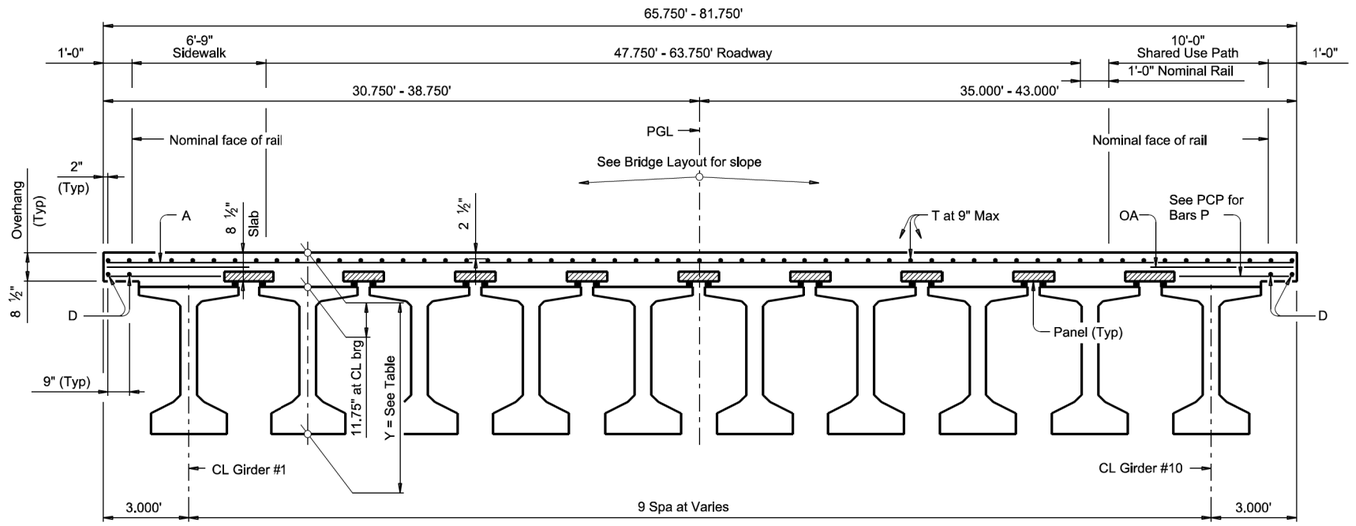

TYPICAL TRANSVERSE SECTION

	Y
ABUT 1 FWD BENT 2 BCK	5'-7 3/4"
BENT 2 FWD BENT 3 BCK, FWD ABUT 4	4'-7 3/4"

TABLE OF ESTIMATED QUANTITIES

SPAN	REINF CONC SLAB (LF)	PRESTR CONC GIRDER (LF)	REINF STEEL ③ (LB)
1	6454	945.251	14845
2	5500	745.195	12650
3	5765	745.169	13259

BAR TABLE

BAR	SIZE
A	#4
D	#4
G	#4
H	#4
J	#4
M	#4
OA	#5
P	#4
T	#4

① If multi-span units (with slab continuous over interior bents) are indicated on the Bridge Layout, see standard IGCS for adjustment to slab reinforcement and quantities.

② "Y" value shown is based on theoretical girder camber, dead load deflection from an 8 ½" concrete slab, a constant roadway grade, and using precast panels (PCP). The Contractor will adjust this value as necessary for any roadway vertical curve and/or if the precast overhang panel (PCP(O)) option is used.

③ Reinforced steel weight is calculated using an approximate factor of 2.3LB/SF

THIS DOCUMENT IS RELEASED FOR THE PURPOSE OF PRELIMINARY REVIEW UNDER THE AUTHORITY OF A.M. STONE, P.E. 91049 ON 09/23/19 IT IS NOT TO BE USED FOR CONSTRUCTION OR PERMIT PURPOSES.

M&S ENGINEERING
CIVIL | ELECTRICAL | STRUCTURAL | MEP
TEXAS PROFESSIONAL ENGINEERING FIRM # F-1394
WWW.MSENGR.COM | (830) 228-5446

REV.NO.	DATE	DESCRIPTION	BY

PAPE-DAWSON ENGINEERS
SAN ANTONIO I AUSTIN I HOUSTON I FORT WORTH I DALLAS
2000 NW LOOP 410 I SAN ANTONIO, TX 78213 I 210.375.9000
TBPE FIRM REGISTRATION #470 I TBPLS FIRM REGISTRATION #10028800

City of New Braunfels

KLEIN RD PH 2

SPAN AND SLAB DETAILS

SPANS 1 - 3

STA 134+60 TO STA 137+05

SHEET 1 OF 1

DGN:	STATE	PROJECT NO.	HIGHWAY NO.
CHK DGN:	TEXAS	19PDENG014	KLEIN
DWG:	COUNTY		SHEET NO.
CHK DWG:	GUADALUPE		302

Plotted on: $DATE$

DATE: Design Filename: 19PDENG014-SLAB DETAILS.dgn
FILE:

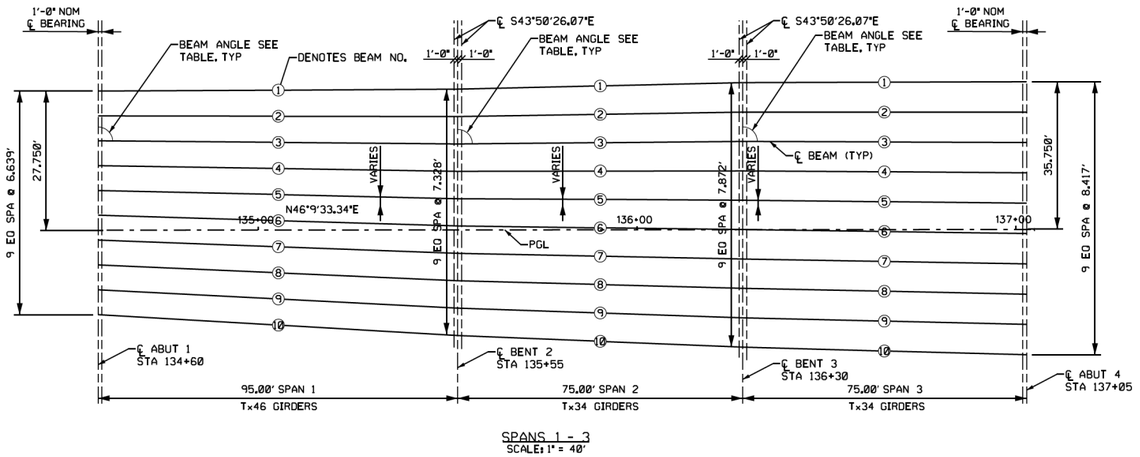

SPANS 1 - 3
SCALE: 1" = 40'

N

BEAM DATA TABLE

SPAN NO.	BEAM	LENGTH ℄-℄ ABUT/BENT (1)	LENGTH OF BEAM (2)	LENGTH ℄-℄ NOMINAL BRG (3)	ANGLE
1	1	94.526'			88°38'57.39"
1	2	94.513'			89°03'05.00"
1	3	94.504'			89°27'12.94"
1	4	94.500'			89°51'21.08"
1	5	94.501'			90°15'29.27"
1	6	94.506'			90°39'37.37"
1	7	94.516'			91°03'45.23"
1	8	94.531'			91°27'52.72"
1	9	95.550'			91°51'59.68"
1	10	94.574'			92°16'05.99"
2	1	74.523'			88°34'45.68"
2	2	74.512'			88°59'08.12"
2	3	75.504'			89°23'30.93"
2	4	74.500'			89°47'53.95"
2	5	74.500'			90°12'17.05"
2	6	74.504'			90°36'40.07"
2	7	74.512'			91°01'02.88"
2	8	74.523'			91°25'25.31"
2	9	74.538'			91°49'47.23"
2	10	74.557'			92°14'08.49"
3	1	74.525'			88°30'10.84"
3	2	74.519'			88°41'43.47"
3	3	74.514'			88°53'16.22"
3	4	74.510'			89°04'49.05"
3	5	74.506'			89°16'21.95"
3	6	74.503'			89°27'54.92"
3	7	74.501'			89°39'27.93"
3	8	74.500'			89°51'00.96"
3	9	74.500'			90°02'34.01"
3	10	74.501'			90°14'07.06"

① DIMENSIONS SHOWN REPRESENT HORIZONTAL BEAM LENGTH FROM FACE OF ABUTMENT BACKWALL TO CENTERLINE OF BENT.
② FABRICATORS SHALL ADJUST BEAM LENGTHS FOR BEAM SLOPES AS REQUIRED.
③ SEE STANDARD IGEB FOR NOMINAL CENTERLINE BEARING GIRDER END DETAILS. AT TRANSISTION BENT 2, THE (BK) SPAN GIRDER AND THE ELASTOMERIC BEARINGS RECIEVE THE SAME TREATMENT AS SHOWN FOR CONVENTIONAL INTERIOR BENTS, WHEREAS THE (FWD) SPAN GIRDER AND ELASTOMERIC BEARINGS RECIEVE THE SAME ASH SHOWN FOR ABUTMENTS.

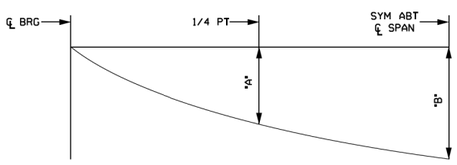

DEAD LOAD
DEFLECTION DIAGRAM

CALCULATED DEFLECTIONS SHOWN ARE DUE TO CONCRETE SLAB (Ec = 500 ksi). ADJUST VALUES AS REQUIRED IF OPTIONAL SLAB FORMING IS USED. THESE VALUES MAY REQUIRED FIELD VERIFICATION.

DEAD LOAD DEFLECTIONS

SPAN NO.	BEAM	"A"	"B"
1			

THIS DOCUMENT IS RELEASED FOR THE PURPOSE OF PRELIMINARY REVIEW UNDER THE AUTHORITY OF A.J. KLOTZ, P.E. 91049 ON 09/23/19 IT IS NOT TO BE USED FOR CONSTRUCTION OR PERMIT PURPOSES.

M&S ENGINEERING
CIVIL | ELECTRICAL | STRUCTURAL | MEP
TEXAS PROFESSIONAL ENGINEERING FIRM # F-1394
WWW.MSENGR.COM | (830) 228-5446

REV.NO.	DATE	DESCRIPTION	BY

PAPE-DAWSON ENGINEERS
SAN ANTONIO | AUSTIN | HOUSTON | FORT WORTH | DALLAS
2000 NW LOOP 410 | SAN ANTONIO, TX 78213 | 210.375.9000
TBPE FIRM REGISTRATION #470 | TBPLS FIRM REGISTRATION #10028800

City of New Braunfels

KLEIN RD PH 2

FRAMING PLAN

SPANS 1 - 3

STA 134+60 TO STA 137+05

SHEET 1 OF

DGN:	STATE	PROJECT NO.	HIGHWAY NO.
CHK DGN:	TEXAS	19PDENG014	KLEIN
DWG:	COUNTY		SHEET NO.
CHK DWG:	GUADALUPE		303

Design Filename: I:\PDENG\014-FRAMING PLAN.dgn

Plotted on: $DATE$

SUMMARY OF ESTIMATED QUANTITIES

SUMMARY OF ESTIMATED QUANTITIES												
BID ITEM	400-6005	416-6004	420-6013	420-6025	422-6001	422-6013	422-6015	425-6036	425-6038	450-6034	450-6104	454-6020
BID ITEM DESCRIPTION	CEMENT STABILIZED BACKFILL	DRILL SHAFT (36 IN)	CL C CONC (ABUT)	CL C CONC (BENT)	REINF CONC SLAB	BRIDGE SIDEWALK	APPROACH SLAB	PRESTR CONC GIRDER (TX34)	PRESTR CONC GIRDER (TX46)	RAIL (C402)	RAIL (PR22)	SEALED EXPANSION JOINT (4 IN) (SEJ - B)
BRIDGE ELEMENT	CY	LF	CY	CY	SF	SF	CY	LF	LF	LF	LF	LF
2 - ABUTMENTS	81.3	300.00	67.8				147.68					
2 - BENT		300.00		127.9								
1-245.00FT PRESTRESSED CONCRETE I-GIRDER UNIT					18852	4103.75		945.25	1490.36	490.00	245.00	139.50
TOTALS	81.30	600.00	67.8	127.9	18852	4103.75	147.68	945.25	1490.36	490.00	245.00	139.50

BEARING SEAT ELEVATIONS

	GIRDER 1	GIRDER 1	GIRDER 1	GIRDER 1	GIRDER 1	GIRDER 1	GIRDER 1	GIRDER 1	GIRDER 1	GIRDER 1
ABUT 1 (FWD)										
BENT 2 (BK)										
(FWD)										
BENT 3 (BK)										
(FWD)										
ABUT 4 (FWD)										
(FWD)										

Design Filename: 19PDENG014-QUANT AND BEARING.dgn

THIS DOCUMENT IS RELEASED FOR THE PURPOSE OF PRELIMINARY REVIEW UNDER THE AUTHORITY OF A.M. STONE, P.E. 91049 ON 09/23/19 IT IS NOT TO BE USED FOR CONSTRUCTION OR PERMIT PURPOSES.

M&S ENGINEERING
CIVIL | ELECTRICAL | STRUCTURAL | MEP
TEXAS PROFESSIONAL ENGINEERING FIRM # F-1394
WWW.MSENGR.COM | (830) 228-5446

REV.NO.	DATE	DESCRIPTION	BY

PAPE-DAWSON ENGINEERS
SAN ANTONIO | AUSTIN | HOUSTON | FORT WORTH | DALLAS
2000 NW LOOP 410 | SAN ANTONIO, TX 78213 | 210.375.9000
TBPE FIRM REGISTRATION #470 | TBPLS FIRM REGISTRATION #10028800

City of New Braunfels

KLEIN RD PH 2

ESTIMATED QUANTITIES & BEARING SEAT ELEVATIONS

SPANS 1 - 3

STA 134+60 TO STA 137+05

SHEET X OF XX

DGN:	STATE	PROJECT NO.	HIGHWAY NO.
CHK DGN:	TEXAS	19PDENG014	KLEIN
DWG:	COUNTY		SHEET NO.
CHK DWG:	GUADALUPE		304

ITEM	DESCRIPTION	UNIT	QTY
0423-6001	RETAINING WALL (MSE)	SF	957
0450-6034	RAIL (TY C402)	LF	193

Chain WALLA contains:
WALLA1 WALLA2

Beginning chain WALLA description STA 134+02.05
Feature: Struc_Wall

Point WALLA1 N 13,790,860.31 E 2,254,938.66 Sta 10+00.00

Course from WALLA1 to WALLA2 N 44° 16' 55" E Dist 108.11

Point WALLA2 N 13,790,937.71 E 2,255,014.13 Sta 11+08.11

Ending chain WALLA description

Chain WALLB1 contains:
WALLB11 WALLB12

Beginning chain WALLB1 description
Feature: Struc_Wall

Point WALLB11 N 13,790,935.61 E 2,255,014.12 Sta 20+00.00

Course from WALLB11 to WALLB12 N 45° 22' 39" W Dist 76.00

Point WALLB12 N 13,790,988.99 E 2,254,960.03 Sta 20+76.00

Ending chain WALLB1 description

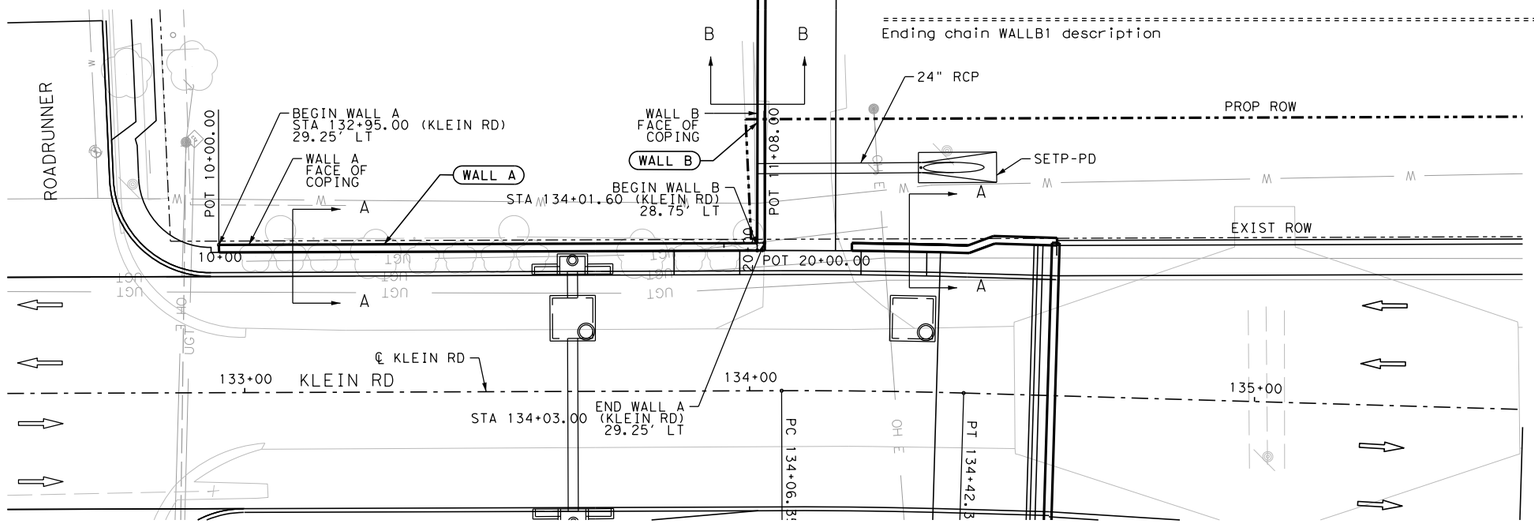

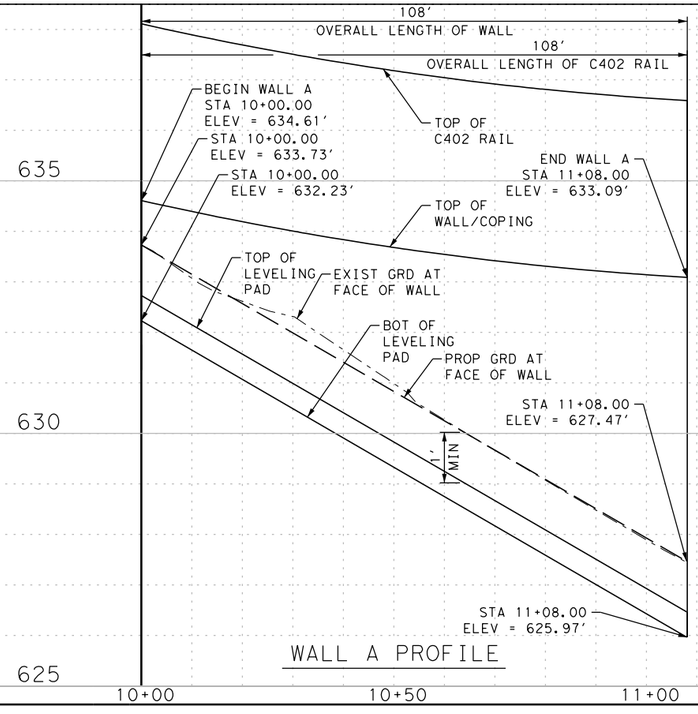

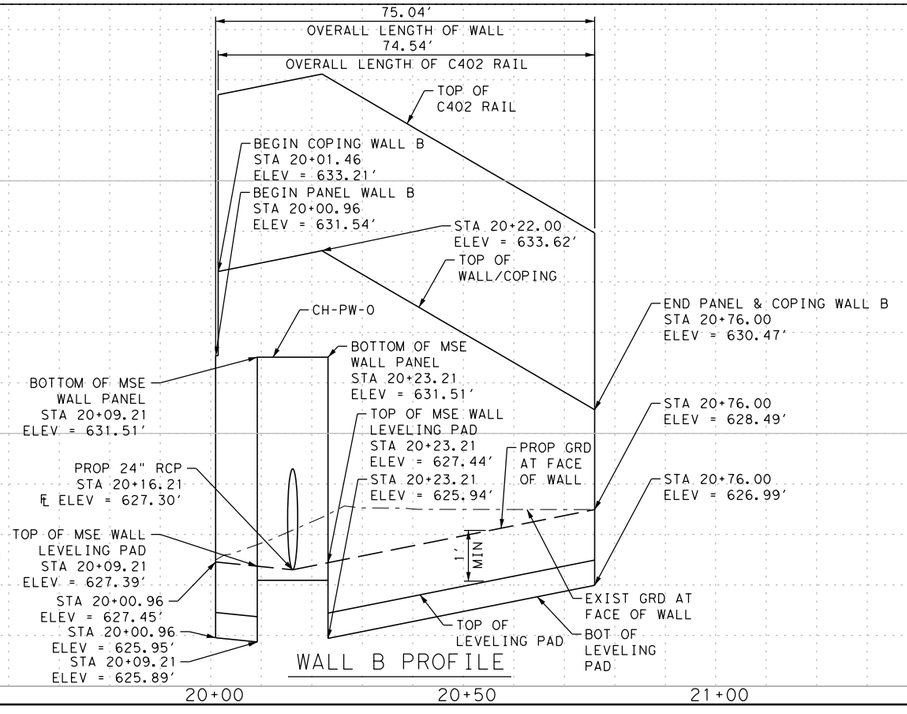

LEGEND

- TRAFFIC FLOW ARROW
- FIELD INLET
- CURB INLET
- DROP INLET
- MANHOLE

NOTES

1. ALL RETAINING WALL MEASUREMENTS ARE TO FACE OF WALL UNLESS OTHERWISE NOTED.
2. SQUARE FOOT SURFACE AREA OF RETAINING WALL IS MEASURED BETWEEN FINISHED GRADE AT TOP OF WALL AND THE PLAN DESIGNED TOP OF LEVELING PAD. THE PLAN DESIGNED TOP OF LEVELING PAD IS SET AT A MINIMUM OF 1' BELOW PROPOSED GROUND AT THE FACE OF WALL.
3. ANY ADJUSTMENTS MADE TO ACCOMODATE THE AVAILABLE DESIGNS WILL NOT BE MEASURED. THE QUANTITY FOR WHICH PAYMENT IS MADE WILL BE THE QUANTITY AS SHOWN IN THE PLANS.
4. SEE MSE RETAINING WALL MISC DETAILS SHEET FOR SECTION AT CORNER OF WALL.
5. SEE BORING LOGS SHEETS FOR GEOTECHNICAL INFORMATION.
6. EXISTING FEATURES ARE SHOWN SCREENED BACK; i.e. FADED.
7. SEE MISCELLANEOUS WALL DETAILS SHEETS (312-315) FOR SECTION DETAILS.

DESIGN

INTERIM REVIEW
DOCUMENT INCOMPLETE. NOT INTENDED FOR PERMIT, BIDDING OR CONSTRUCTION.
ENGINEER: TYLER PAYNE DUBE
P.E. SERIAL NO: 118612
DATE: 1/9/2020

APPROVAL

INTERIM REVIEW
DOCUMENT INCOMPLETE. NOT INTENDED FOR PERMIT, BIDDING OR CONSTRUCTION.
ENGINEER: JOHN A. TYLER
P.E. SERIAL NO: 105193
DATE: 1/9/2020

0 10 20 30 60

SCALE: PLAN 1":30' PROFILE 1":3'

REV. NO.	DATE	DESCRIPTION	BY

PAPE-DAWSON ENGINEERS
SAN ANTONIO | AUSTIN | HOUSTON | FORT WORTH | DALLAS
2000 NW LOOP 410 | SAN ANTONIO, TX 78213 | 210.375.9000
TBPE FIRM REGISTRATION #470 | TBPLS FIRM REGISTRATION #10028800

City of New Braunfels

KLEIN RD PHASE 2

RETAINING WALL PLAN & PROFILE

WALL A & WALL B

SHEET 1 OF 7

DGN:	STATE	PROJECT NO.	ROADWAY
CHK DGN:	TEXAS	NB 18-026	KLEIN RD
DWG:	COUNTY	CITY	SHEET NO.
CHK DWG:	GUADALUPE	NEW BRAUNFELS	305

Plotted on: 1/9/2020

Design Filename: H:\Projects\510\30\03\Design\Civil\Bridge\Retaining Wall\5103003rw01.dgn

Plotted on: 1/9/2020

Design Filename: H:\Projects\510\30\03\Design\Civil\Bridge\Retaining Wall\5103003rw02.dgn

```
Chain WALLC contains:
 CUR WALLC_1 WALLC4 WALLC5

Beginning chain WALLC description
Feature: Struc_Wall
================================================================================

                                        Curve Data
                                       *----------*

Curve WALLC_1
P.I.  Station              30+11.49  N    13,790,958.13  E     2,255,034.37
Delta        =          1° 09′ 57" (RT)
Degree       =          5° 04′ 26"
Tangent      =                11.49
Length       =                22.98
Radius       =            1,129.25
External     =                 0.06
Long Chord   =                22.98
Mid. Ord.    =                 0.06
P.C.  Station              30+00.00  N    13,790,950.00  E     2,255,026.25
P.T.  Station              30+22.98  N    13,790,966.08  E     2,255,042.66
C.C.                                 N    13,790,151.59  E     2,255,824.84
Back         = N  44° 59′ 36" E
Ahead        = N  46° 09′ 33" E
Chord Bear   = N  45° 34′ 35" E

Course from PT WALLC_1 to WALLC4 N 24° 21′ 28" E Dist 5.39

Point WALLC4          N    13,790,970.99 E     2,255,044.88 Sta      30+28.37

Course from WALLC4 to WALLC5 N 46° 09′ 33" E Dist 12.62

Point WALLC5          N    13,790,979.73 E     2,255,053.98 Sta      30+40.98

================================================================================
Ending chain WALLC description


Chain WALLD contains:
 WALLD1 CUR WALLD_3 WALLD5

Beginning chain WALLD description
Feature: Struc_Wall
================================================

Point WALLD1          40+00.00
   N    13,790,890.62 E     2,255,057.96 Sta

Course from WALLD1 to PC WALLD_3
   N 44° 16′ 55" E Dist 6.35

                                        Curve Data
                                       *----------*

Curve WALLD_3
P.I.  Station              40+23.79
   N    13,790,907.66  E     2,255,074.58
Delta        =          1° 52′ 38" (RT)
Degree       =          5° 22′ 48"
Tangent      =                17.45
Length       =                34.89
Radius       =            1,065.00
External     =                 0.14
Long Chord   =                34.89
Mid. Ord.    =                 0.14
P.C.  Station              40+06.35
   N    13,790,895.17  E     2,255,062.39
P.T.  Station              40+41.24
   N    13,790,919.74  E     2,255,087.16
C.C.
   N    13,790,151.59  E     2,255,824.84
Back         = N  44° 16′ 55" E
Ahead        = N  46° 09′ 33" E
Chord Bear   = N  45° 13′ 14" E

Course from PT WALLD_3 to WALLD5
   N 46° 09′ 33" E Dist 17.62

Point WALLD5          40+58.85
   N    13,790,931.94 E     2,255,099.87 Sta

================================================
Ending chain WALLD description
```

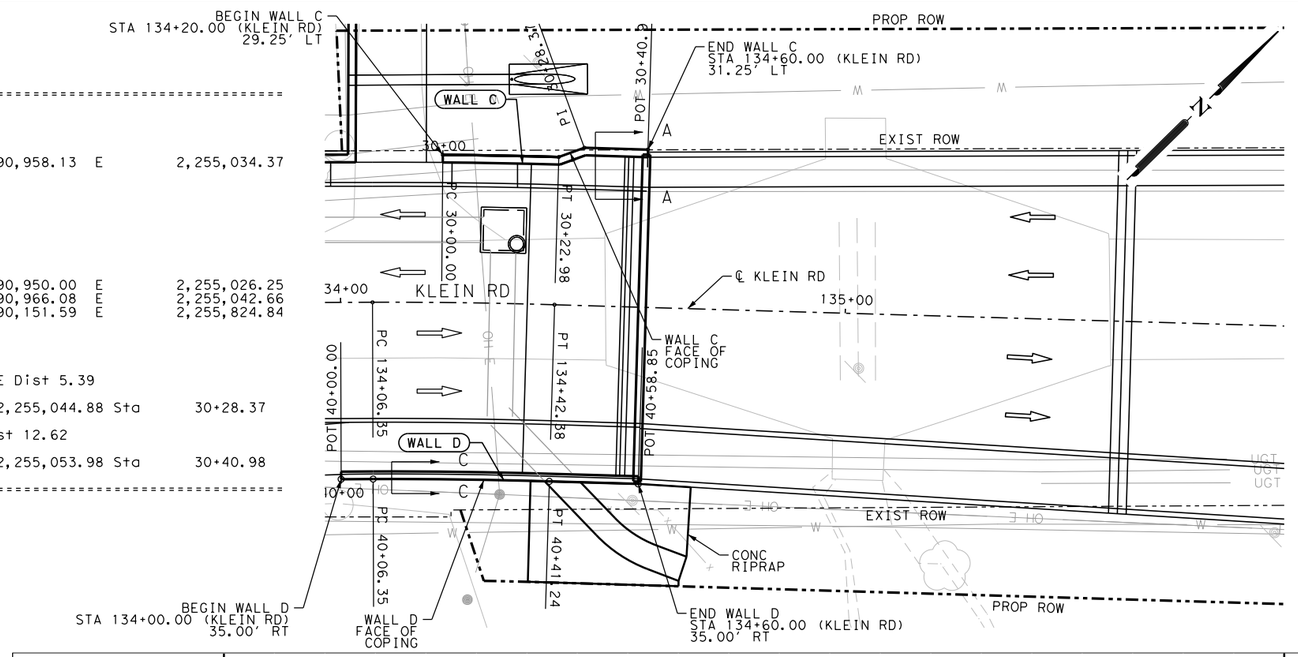

ITEM	DESCRIPTION	UNIT	QTY
0423-6001	RETAINING WALL (MSE)	SF	759
0450-6034	RAIL (TY C402)	LF	97

LEGEND

TRAFFIC FLOW ARROW — FIELD INLET
CURB INLET — DROP INLET
MANHOLE

NOTES

1. ALL RETAINING WALL MEASUREMENTS ARE TO FACE OF WALL UNLESS OTHERWISE NOTED.
2. SQUARE FOOT SURFACE AREA OF RETAINING WALL IS MEASURED BETWEEN FINISHED GRADE AT TOP OF WALL AND THE PLAN DESIGNED TOP OF LEVELING PAD. THE PLAN DESIGNED TOP OF LEVELING PAD IS SET AT A MINIMUM OF 1′ BELOW PROPOSED GROUND AT THE FACE OF WALL.
3. ANY ADJUSTMENTS MADE TO ACCOMODATE THE AVAILABLE DESIGNS WILL NOT BE MEASURED. THE QUANTITY FOR WHICH PAYMENT IS MADE WILL BE THE QUANTITY AS SHOWN IN THE PLANS.
4. SEE MSE RETAINING WALL MISC DETAILS SHEET FOR SECTION AT CORNER OF WALL.
5. SEE BORING LOGS SHEETS FOR GEOTECHNICAL INFORMATION.
6. EXISTING FEATURES ARE SHOWN SCREENED BACK; i.e. FADED.
7. SEE MISCELLANEOUS WALL DETAILS SHEETS (312-315) FOR SECTION DETAILS.

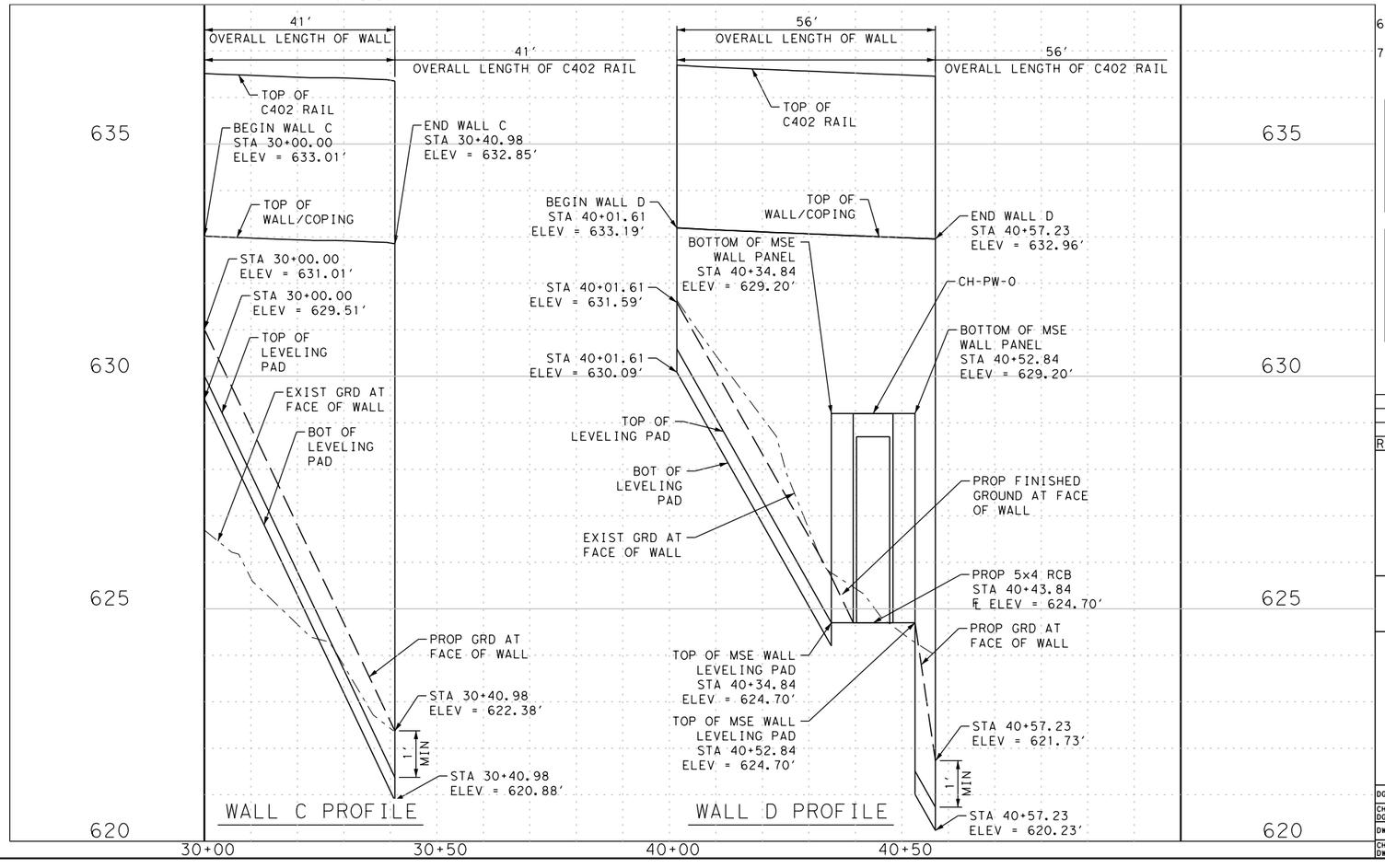

DESIGN

INTERIM REVIEW
DOCUMENT INCOMPLETE. NOT INTENDED FOR PERMIT, BIDDING OR CONSTRUCTION.
ENGINEER: TYLER PAYNE DUBE
P.E. SERIAL NO: 118612
DATE: 1/9/2020

APPROVAL

INTERIM REVIEW
DOCUMENT INCOMPLETE. NOT INTENDED FOR PERMIT, BIDDING OR CONSTRUCTION.
ENGINEER: JOHN A. TYLER
P.E. SERIAL NO: 105193
DATE: 1/9/2020

0 10 20 30 60

SCALE: PLAN 1":30′ PROFILE 1":3′

REV. NO.	DATE	DESCRIPTION	BY

PAPE-DAWSON ENGINEERS
SAN ANTONIO | AUSTIN | HOUSTON | FORT WORTH | DALLAS
2000 NW LOOP 410 | SAN ANTONIO, TX 78213 | 210.375.9000
TBPE FIRM REGISTRATION #470 | TBPLS FIRM REGISTRATION #10028800

City of New Braunfels

KLEIN RD PHASE 2

RETAINING WALL PLAN & PROFILE

WALL C & WALL D

SHEET 2 OF 7

DGN:	STATE	PROJECT NO.	ROADWAY
CHK DGN:	TEXAS	NB 18-026	KLEIN RD
DWG:	COUNTY	CITY	SHEET NO.
CHK DWG:	GUADALUPE	NEW BRAUNFELS	306

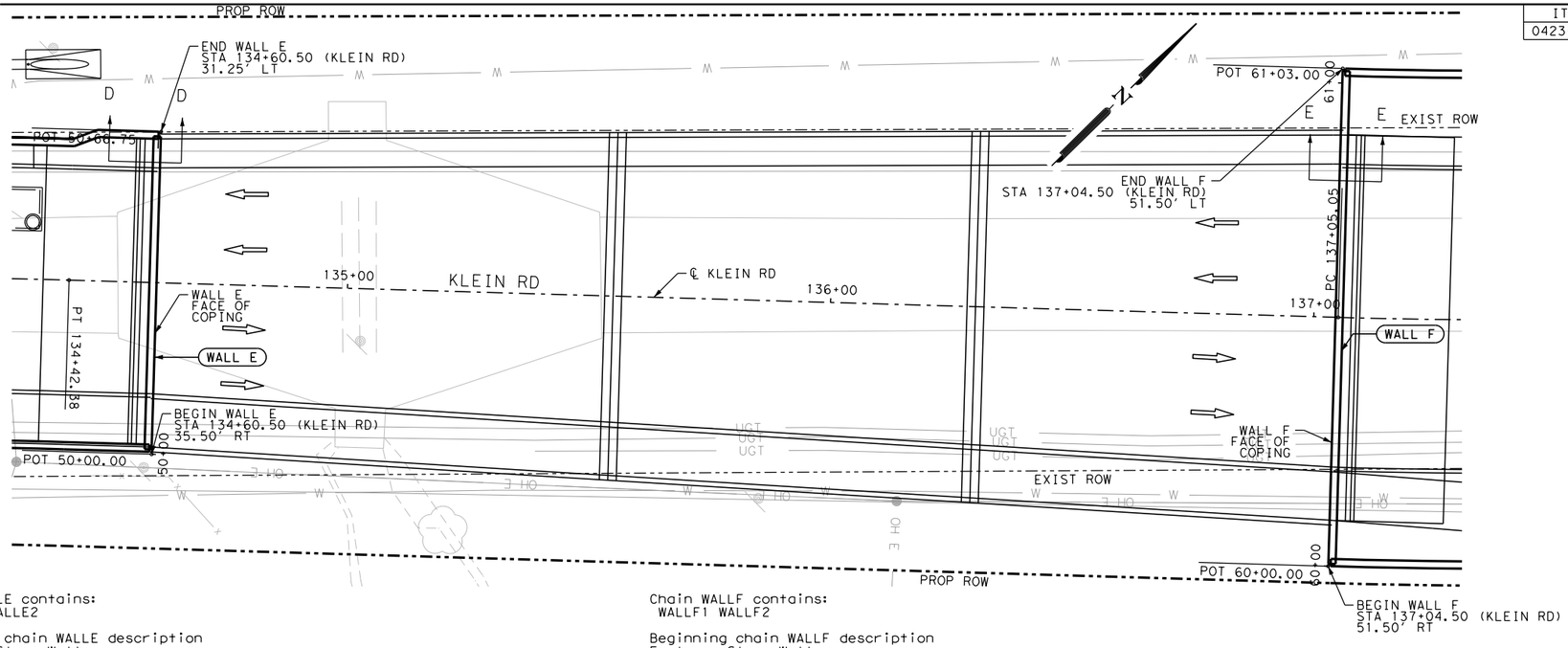

ITEM	DESCRIPTION	UNIT	QTY
0423-6001	RETAINING WALL (MSE)	SF	818

Chain WALLE contains:
WALLE1 WALLE2

Beginning chain WALLE description
Feature: Struc_Wall

Point WALLE1	N	13,790,931.93 E	2,255,100.57	Sta	50+00.00
Course from WALLE1 to WALLE2 N 43° 50' 27" W Dist 66.75					
Point WALLE2	N	13,790,980.07 E	2,255,054.34	Sta	50+66.75

Ending chain WALLE description

Chain WALLF contains:
WALLF1 WALLF2

Beginning chain WALLF description
Feature: Struc_Wall

Point WALLF1	N	13,791,089.40 E	2,255,287.64	Sta	60+00.00
Course from WALLF1 to WALLF2 N 43° 50' 27" W Dist 103.00					
Point WALLF2	N	13,791,163.69 E	2,255,216.30	Sta	61+03.00

Ending chain WALLF description

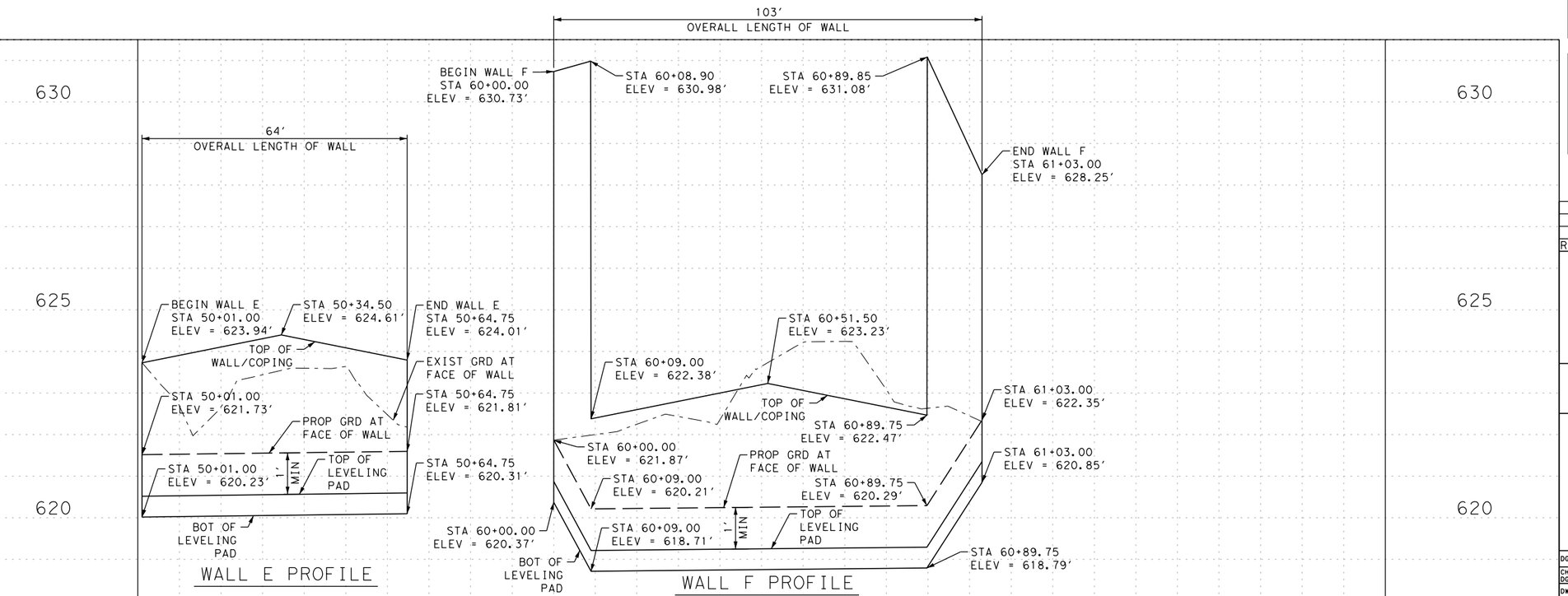

LEGEND

TRAFFIC FLOW ARROW
FIELD INLET
CURB INLET
DROP INLET
MANHOLE

NOTES

1. ALL RETAINING WALL MEASUREMENTS ARE TO FACE OF WALL UNLESS OTHERWISE NOTED.
2. SQUARE FOOT SURFACE AREA OF RETAINING WALL IS MEASURED BETWEEN FINISHED GRADE AT TOP OF WALL AND THE PLAN DESIGNED TOP OF LEVELING PAD. THE PLAN DESIGNED TOP OF LEVELING PAD IS SET AT A MINIMUM OF 1' BELOW PROPOSED GROUND AT THE FACE OF WALL.
3. ANY ADJUSTMENTS MADE TO ACCOMODATE THE AVAILABLE DESIGNS WILL NOT BE MEASURED. THE QUANTITY FOR WHICH PAYMENT IS MADE WILL BE THE QUANTITY AS SHOWN IN THE PLANS.
4. SEE MSE RETAINING WALL MISC DETAILS SHEET FOR SECTION AT CORNER OF WALL.
5. SEE BORING LOGS SHEETS FOR GEOTECHNICAL INFORMATION.
6. EXISTING FEATURES ARE SHOWN SCREENED BACK; i.e. FADED.
7. SEE MISCELLANEOUS WALL DETAILS SHEETS (312-315) FOR SECTION DETAILS.

DESIGN

INTERIM REVIEW
DOCUMENT INCOMPLETE. NOT INTENDED FOR PERMIT, BIDDING OR CONSTRUCTION.
ENGINEER: TYLER PAYNE DUBE
P.E. SERIAL NO: 118612
DATE: 1/9/2020

APPROVAL

INTERIM REVIEW
DOCUMENT INCOMPLETE. NOT INTENDED FOR PERMIT, BIDDING OR CONSTRUCTION.
ENGINEER: JOHN A. TYLER
P.E. SERIAL NO: 105193
DATE: 1/9/2020

0 10 20 30 60

SCALE: PLAN 1":30' PROFILE 1":3'

REV. NO.	DATE	DESCRIPTION	BY

PAPE-DAWSON ENGINEERS
SAN ANTONIO | AUSTIN | HOUSTON | FORT WORTH | DALLAS
2000 NW LOOP 410 | SAN ANTONIO, TX 78213 | 210.375.9000
TBPE FIRM REGISTRATION #470 | TBPLS FIRM REGISTRATION #10028800

City of New Braunfels

KLEIN RD PHASE 2

RETAINING WALL PLAN & PROFILE

WALL E & WALL F

SHEET 3 OF 7

DGN:	STATE	PROJECT NO.	ROADWAY
CHK DGN:	TEXAS	NB 18-026	KLEIN RD
DWG:	COUNTY	CITY	SHEET NO.
CHK DWG:	GUADALUPE	NEW BRAUNFELS	307

Plotted on: 1/9/2020

Design Filename: H:\Projects\510\30\03\Design\Civil\Bridge\Retaining Wall\5103003rw03.dgn

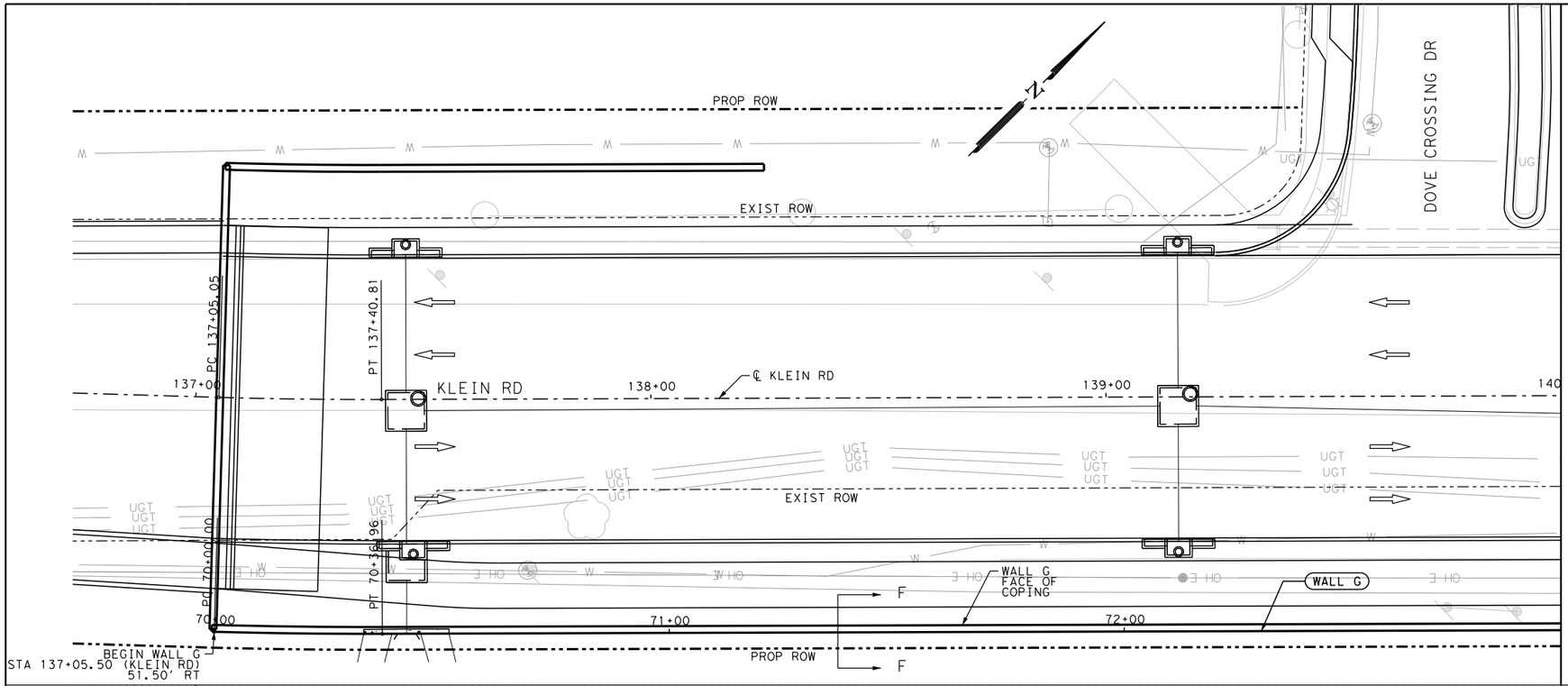

ITEM	DESCRIPTION	UNIT	QTY
0423-6001	RETAINING WALL (MSE)	SF	2393

LEGEND

TRAFFIC FLOW ARROW
FIELD INLET
CURB INLET
DROP INLET
MANHOLE

NOTES

1. ALL RETAINING WALL MEASUREMENTS ARE TO FACE OF WALL UNLESS OTHERWISE NOTED.
2. SQUARE FOOT SURFACE AREA OF RETAINING WALL IS MEASURED BETWEEN FINISHED GRADE AT TOP OF WALL AND THE PLAN DESIGNED TOP OF LEVELING PAD. THE PLAN DESIGNED TOP OF LEVELING PAD IS SET AT A MINIMUM OF 1' BELOW PROPOSED GROUND AT THE FACE OF WALL.
3. ANY ADJUSTMENTS MADE TO ACCOMODATE THE AVAILABLE DESIGNS WILL NOT BE MEASURED. THE QUANTITY FOR WHICH PAYMENT IS MADE WILL BE THE QUANTITY AS SHOWN IN THE PLANS.
4. SEE MSE RETAINING WALL MISC DETAILS SHEET FOR SECTION AT CORNER OF WALL.
5. SEE BORING LOGS SHEETS FOR GEOTECHNICAL INFORMATION.
6. EXISTING FEATURES ARE SHOWN SCREENED BACK; i.e. FADED.
7. SEE MISCELLANEOUS WALL DETAILS SHEETS (312-315) FOR SECTION DETAILS.

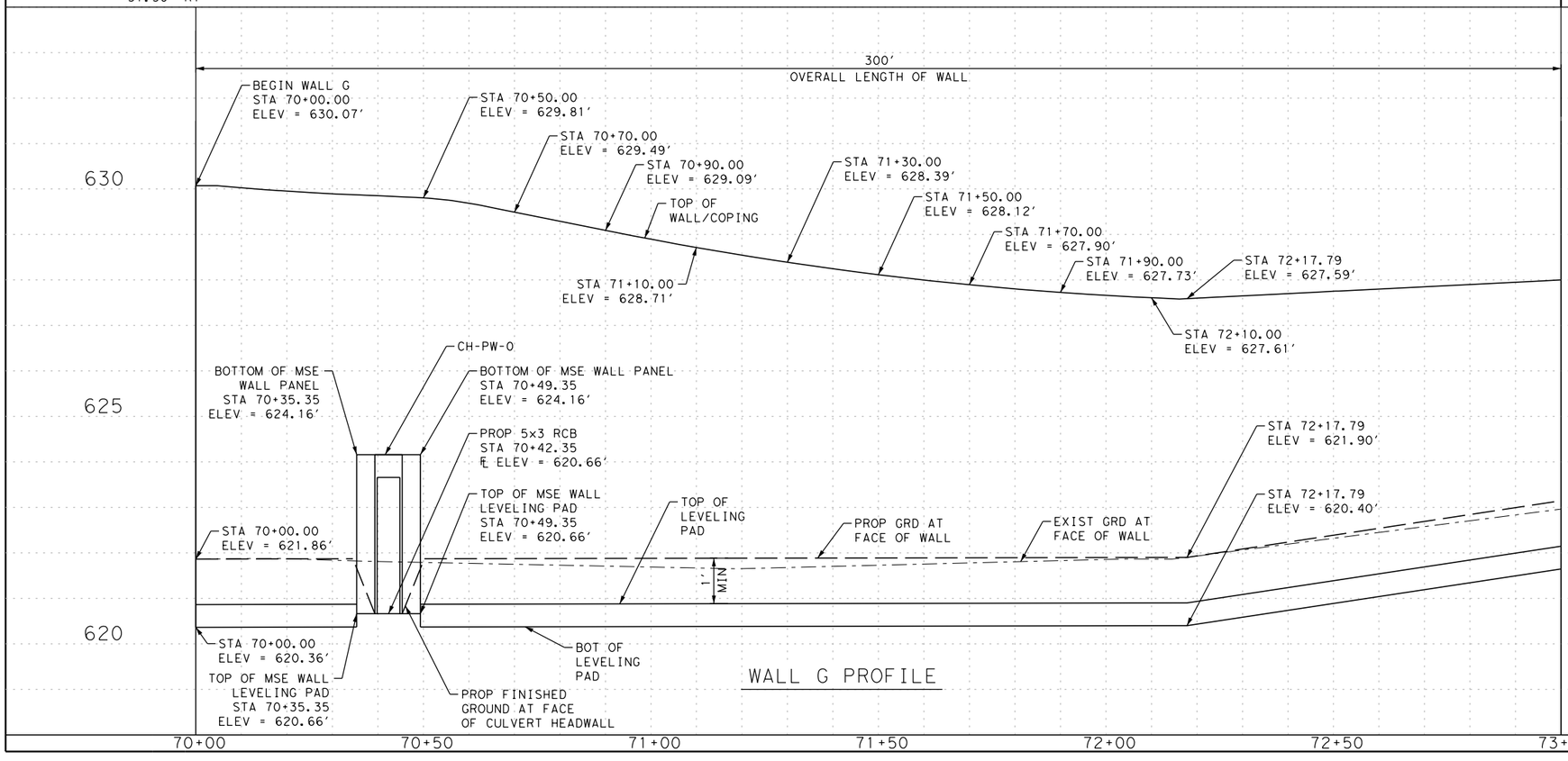

WALL G PROFILE

DESIGN

INTERIM REVIEW

DOCUMENT INCOMPLETE. NOT INTENDED FOR PERMIT, BIDDING OR CONSTRUCTION.
ENGINEER: TYLER PAYNE DUBE
P.E. SERIAL NO: 118612
DATE: 1/9/2020

APPROVAL

INTERIM REVIEW

DOCUMENT INCOMPLETE. NOT INTENDED FOR PERMIT, BIDDING OR CONSTRUCTION.
ENGINEER: JOHN A. TYLER
P.E. SERIAL NO: 105193
DATE: 1/9/2020

0 10 20 30 60

SCALE: PLAN 1":30' PROFILE 1":3'

REV. NO.	DATE	DESCRIPTION	BY

PAPE-DAWSON ENGINEERS
SAN ANTONIO | AUSTIN | HOUSTON | FORT WORTH | DALLAS
2000 NW LOOP 410 | SAN ANTONIO, TX 78213 | 210.375.9000
TBPE FIRM REGISTRATION #470 | TBPLS FIRM REGISTRATION #10028800

City of New Braunfels

KLEIN RD PHASE 2

RETAINING WALL PLAN & PROFILE

WALL G (1 OF 2)

SHEET 4 OF 7

DGN:	STATE	PROJECT NO.	ROADWAY
CHK DGN:	TEXAS	NB 18-026	KLEIN RD
DWG:	COUNTY	CITY	SHEET NO.
CHK DWG:	GUADALUPE	NEW BRAUNFELS	308

Plotted on: 1/9/2020

Design Filename: H:\Projects\510\30\03\Design\Civil\Bridge\Retaining Wall\5103003rw04.dgn

ITEM	DESCRIPTION	UNIT	QTY
0423-6001	RETAINING WALL (MSE)	SF	1052

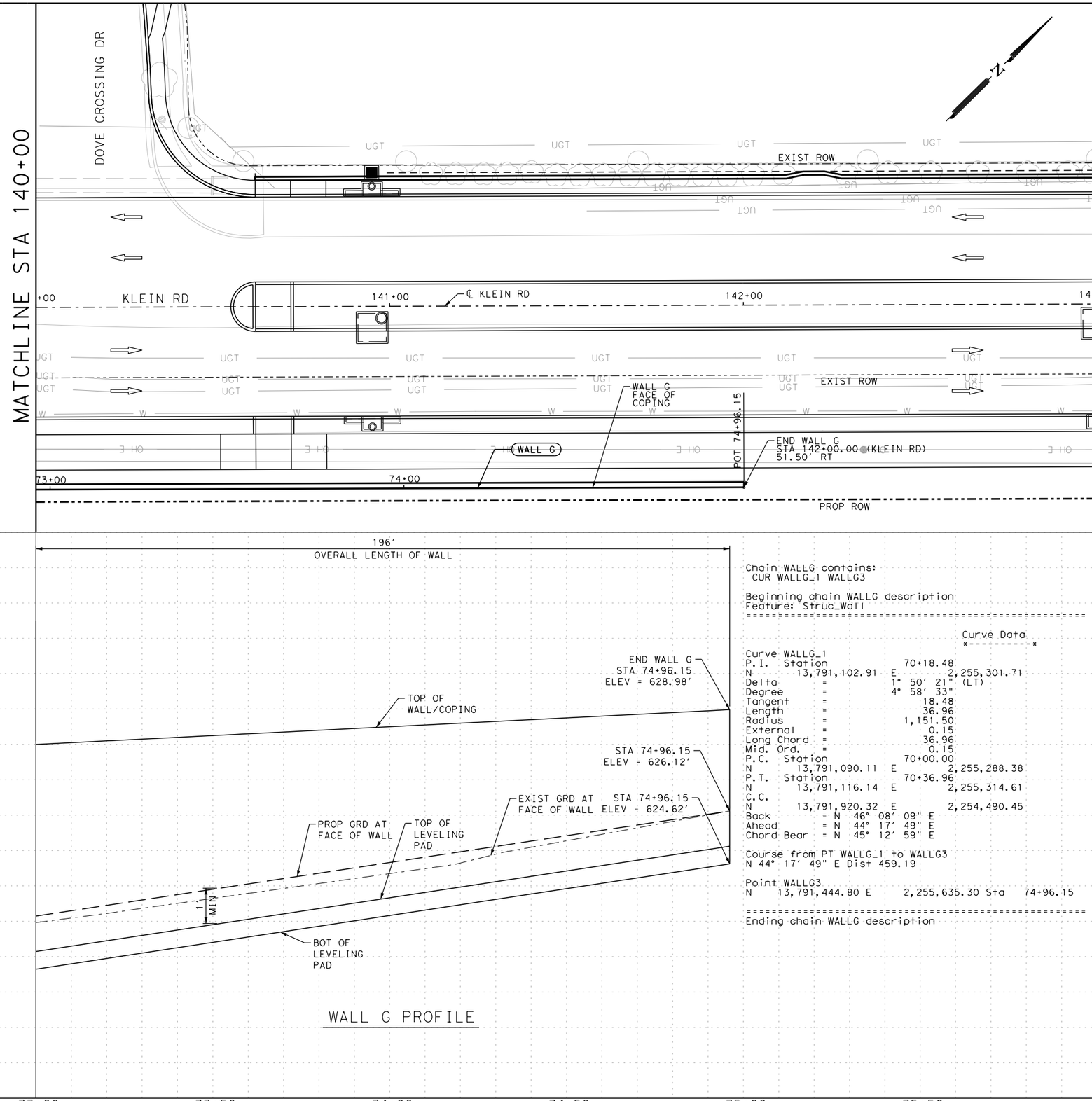

WALL G PROFILE

Chain WALLG contains:
CUR WALLG_1 WALLG3

Beginning chain WALLG description
Feature: Struc_Wall

Curve Data

Curve WALLG_1
P.I. Station 70+18.48
N 13,791,102.91 E 2,255,301.71
Delta = 1° 50' 21" (LT)
Degree = 4° 58' 33"
Tangent = 18.48
Length = 36.96
Radius = 1,151.50
External = 0.15
Long Chord = 36.96
Mid. Ord. = 0.15
P.C. Station 70+00.00
N 13,791,090.11 E 2,255,288.38
P.T. Station 70+36.96
N 13,791,116.14 E 2,255,314.61
C.C.
N 13,791,920.32 E 2,254,490.45
Back = N 46° 08' 09" E
Ahead = N 44° 17' 49" E
Chord Bear = N 45° 12' 59" E

Course from PT WALLG_1 to WALLG3
N 44° 17' 49" E Dist 459.19

Point WALLG3
N 13,791,444.80 E 2,255,635.30 Sta 74+96.15

Ending chain WALLG description

LEGEND

- TRAFFIC FLOW ARROW
- FIELD INLET
- CURB INLET
- DROP INLET
- MANHOLE

NOTES

1. ALL RETAINING WALL MEASUREMENTS ARE TO FACE OF WALL UNLESS OTHERWISE NOTED.
2. SQUARE FOOT SURFACE AREA OF RETAINING WALL IS MEASURED BETWEEN FINISHED GRADE AT TOP OF WALL AND THE PLAN DESIGNED TOP OF LEVELING PAD. THE PLAN DESIGNED TOP OF LEVELING PAD IS SET AT A MINIMUM OF 1' BELOW PROPOSED GROUND AT THE FACE OF WALL.
3. ANY ADJUSTMENTS MADE TO ACCOMODATE THE AVAILABLE DESIGNS WILL NOT BE MEASURED. THE QUANTITY FOR WHICH PAYMENT IS MADE WILL BE THE QUANTITY AS SHOWN IN THE PLANS.
4. SEE MSE RETAINING WALL MISC DETAILS SHEET FOR SECTION AT CORNER OF WALL.
5. SEE BORING LOGS SHEETS FOR GEOTECHNICAL INFORMATION.
6. EXISTING FEATURES ARE SHOWN SCREENED BACK; i.e. FADED.
7. SEE MISCELLANEOUS WALL DETAILS SHEETS (312-315) FOR SECTION DETAILS.

DESIGN

INTERIM REVIEW
DOCUMENT INCOMPLETE. NOT INTENDED FOR PERMIT, BIDDING OR CONSTRUCTION.
ENGINEER: TYLER PAYNE DUBE
P.E. SERIAL NO: 118612
DATE: 1/9/2020

APPROVAL

INTERIM REVIEW
DOCUMENT INCOMPLETE. NOT INTENDED FOR PERMIT, BIDDING OR CONSTRUCTION.
ENGINEER: JOHN A. TYLER
P.E. SERIAL NO: 105193
DATE: 1/9/2020

0 10 20 30 60

SCALE: PLAN 1":30' PROFILE 1":3'

REV. NO.	DATE	DESCRIPTION	BY

PAPE-DAWSON ENGINEERS
SAN ANTONIO | AUSTIN | HOUSTON | FORT WORTH | DALLAS
2000 NW LOOP 410 | SAN ANTONIO, TX 78213 | 210.375.9000
TBPE FIRM REGISTRATION #470 | TBPLS FIRM REGISTRATION #10028800

City of New Braunfels

KLEIN RD PHASE 2

RETAINING WALL PLAN & PROFILE

WALL G (2 OF 2)

SHEET 5 OF 7

DGN:	STATE	PROJECT NO.	ROADWAY
CHK DGN:	TEXAS	NB 18-026	KLEIN RD
DWG:	COUNTY	CITY	SHEET NO.
CHK DWG:	GUADALUPE	NEW BRAUNFELS	309

Plotted on: 1/9/2020

Design Filename: H:\Projects\510\30\03\Design\Civil\Bridge\Retaining Wall\5103003rw05.dgn

ITEM	DESCRIPTION	UNIT	QTY
0423-6001	RETAINING WALL (MSE)	SF	585

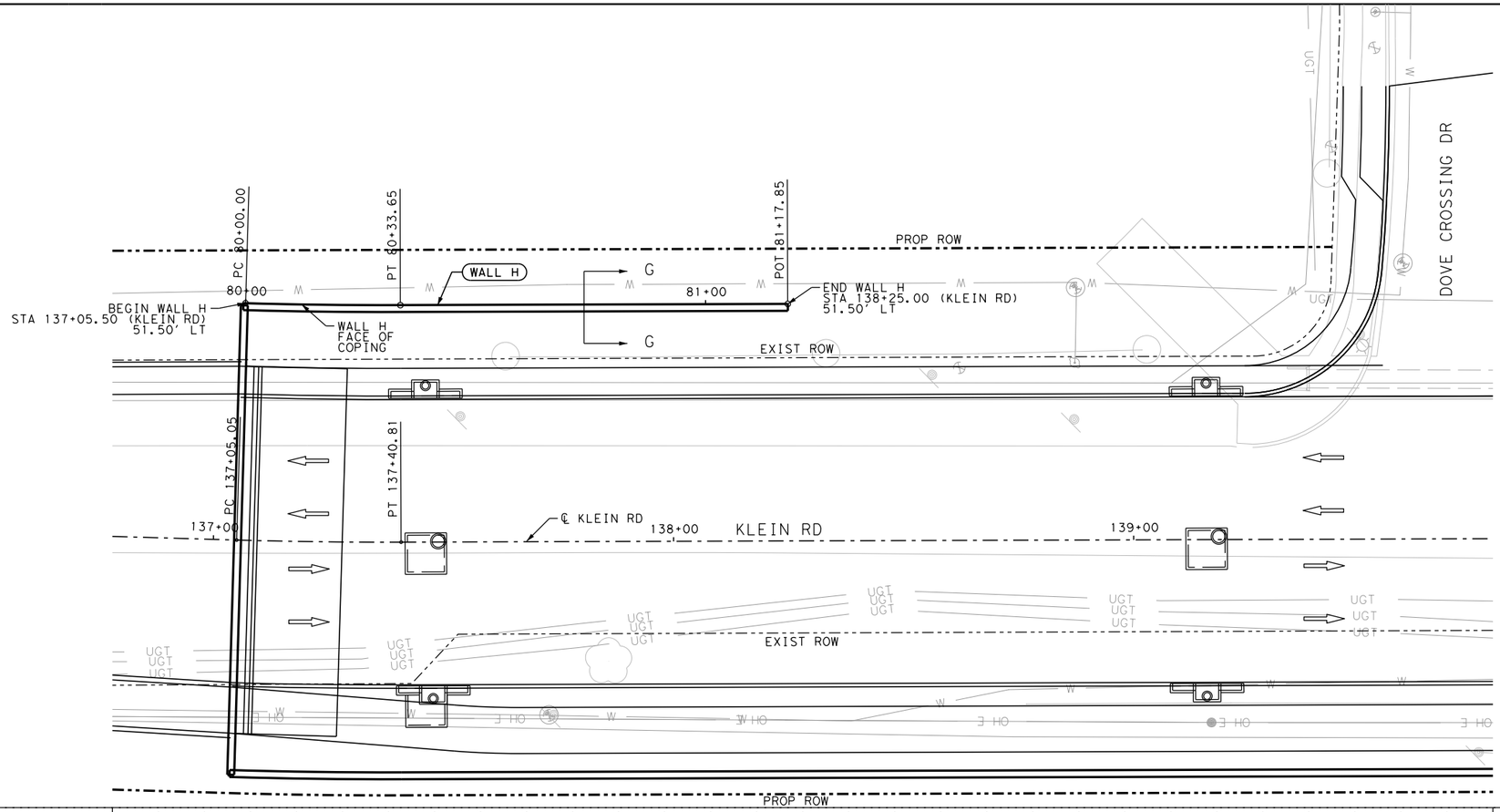

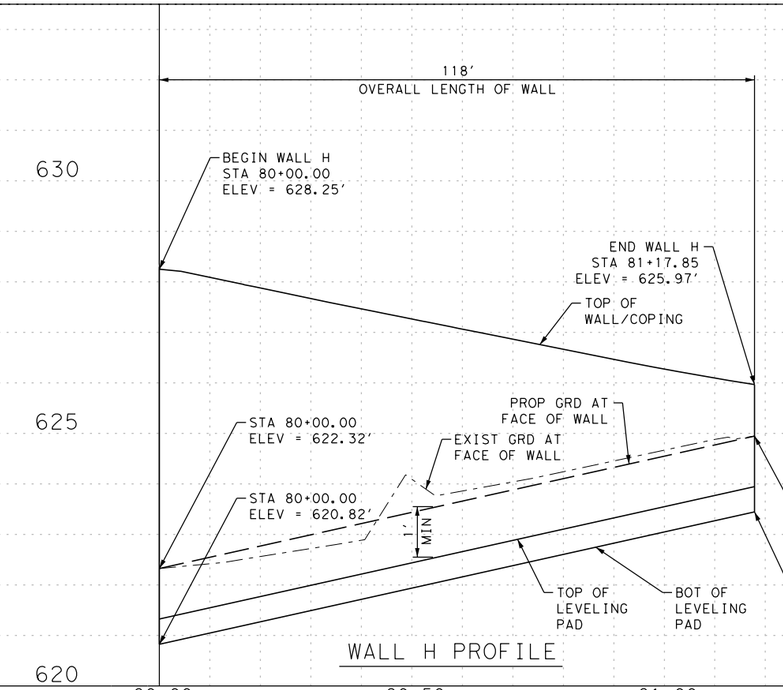

WALL H PROFILE

Chain WALLH contains:
CUR WALLH_1 WALLH3

Beginning chain WALLH description
Feature: Struc_Wall

Curve Data

Curve WALLH_1

P.I. Station	80+16.83	N	13,791,176.03	E	2,255,229.14
Delta =	1° 50' 21" (LT)				
Degree =	5° 27' 52"				
Tangent =	16.83				
Length =	33.65				
Radius =	1,048.50				
External =	0.14				
Long Chord =	33.65				
Mid. Ord. =	0.14				
P.C. Station	80+00.00	N	13,791,164.37	E	2,255,217.01
P.T. Station	80+33.65	N	13,791,188.07	E	2,255,240.89
C.C.		N	13,791,920.32	E	2,254,490.45

Back = N 46° 08' 09" E
Ahead = N 44° 17' 49" E
Chord Bear = N 45° 12' 59" E

Course from PT WALLH_1 to WALLH3 N 44° 17' 49" E Dist 84.19

Point WALLH3 N 13,791,248.33 E 2,255,299.69 Sta 81+17.85

Ending chain WALLH description

LEGEND

TRAFFIC FLOW ARROW
FIELD INLET
CURB INLET
DROP INLET
MANHOLE

NOTES

1. ALL RETAINING WALL MEASUREMENTS ARE TO FACE OF WALL UNLESS OTHERWISE NOTED.
2. SQUARE FOOT SURFACE AREA OF RETAINING WALL IS MEASURED BETWEEN FINISHED GRADE AT TOP OF WALL AND THE PLAN DESIGNED TOP OF LEVELING PAD. THE PLAN DESIGNED TOP OF LEVELING PAD IS SET AT A MINIMUM OF 1' BELOW PROPOSED GROUND AT THE FACE OF WALL.
3. ANY ADJUSTMENTS MADE TO ACCOMODATE THE AVAILABLE DESIGNS WILL NOT BE MEASURED. THE QUANTITY FOR WHICH PAYMENT IS MADE WILL BE THE QUANTITY AS SHOWN IN THE PLANS.
4. SEE MSE RETAINING WALL MISC DETAILS SHEET FOR SECTION AT CORNER OF WALL.
5. SEE BORING LOGS SHEETS FOR GEOTECHNICAL INFORMATION.
6. EXISTING FEATURES ARE SHOWN SCREENED BACK; i.e. FADED.
7. SEE MISCELLANEOUS WALL DETAILS SHEETS (312-315) FOR SECTION DETAILS.

DESIGN

INTERIM REVIEW
DOCUMENT INCOMPLETE. NOT INTENDED FOR PERMIT, BIDDING OR CONSTRUCTION.
ENGINEER: TYLER PAYNE DUBE
P.E. SERIAL NO: 118612
DATE: 1/9/2020

APPROVAL

INTERIM REVIEW
DOCUMENT INCOMPLETE. NOT INTENDED FOR PERMIT, BIDDING OR CONSTRUCTION.
ENGINEER: JOHN A. TYLER
P.E. SERIAL NO: 105193
DATE: 1/9/2020

0 10 20 30 60

SCALE: PLAN 1":30' PROFILE 1":3'

REV. NO.	DATE	DESCRIPTION	BY

PAPE-DAWSON ENGINEERS
SAN ANTONIO | AUSTIN | HOUSTON | FORT WORTH | DALLAS
2000 NW LOOP 410 | SAN ANTONIO, TX 78213 | 210.375.9000
TBPE FIRM REGISTRATION #470 | TBPLS FIRM REGISTRATION #10028800

City of New Braunfels

KLEIN RD PHASE 2

RETAINING WALL PLAN & PROFILE

WALL H

SHEET 6 OF 7

DGN:	STATE	PROJECT NO.	ROADWAY
CHK DGN:	TEXAS	NB 18-026	KLEIN RD
DWG:	COUNTY	CITY	SHEET NO.
CHK DWG:	GUADALUPE	NEW BRAUNFELS	310

Plotted on: 1/9/2020

Design Filename: H:\Projects\510\30\03\Design\Civil\Bridge\Retaining Wall\5103003rw06.dgn

Chain WALLI contains:
WALLI1 WALLI3 WALLI5 WALLI7 WALLI9 WALLI10

Beginning chain WALLI description
Feature: Struc_Wall

Point WALLI1	N	13,791,407.72 E	2,255,475.82 Sta	90+00.00
Course from WALLI1 to WALLI3 N 44° 17′ 49" E Dist 149.92				
Point WALLI3	N	13,791,515.02 E	2,255,580.52 Sta	91+49.92
Course from WALLI3 to WALLI5 N 32° 59′ 13" E Dist 5.10				
Point WALLI5	N	13,791,519.30 E	2,255,583.30 Sta	91+55.02
Course from WALLI5 to WALLI7 N 44° 17′ 49" E Dist 6.00				
Point WALLI7	N	13,791,523.59 E	2,255,587.49 Sta	91+61.02
Course from WALLI7 to WALLI9 N 55° 36′ 25" E Dist 5.10				
Point WALLI9	N	13,791,526.47 E	2,255,591.69 Sta	91+66.12
Course from WALLI9 to WALLI10 N 44° 17′ 49" E Dist 72.00				
Point WALLI10	N	13,791,578.00 E	2,255,641.98 Sta	92+38.12

Ending chain WALLI description

ITEM	DESCRIPTION	UNIT	QTY
0423-6008	RETAINING WALL (CAST - IN - PLACE)	SF	831
0450-6047	RAIL (HANDRAIL)(TY A)	LF	167

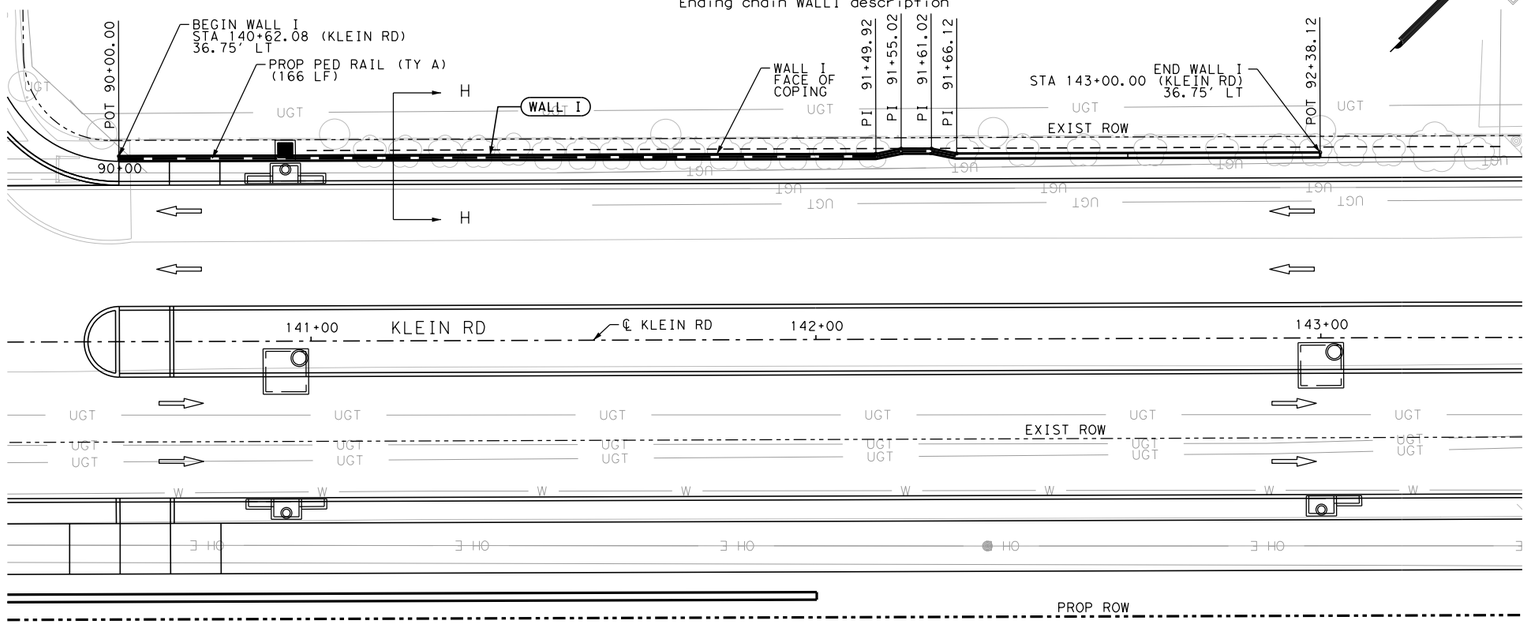

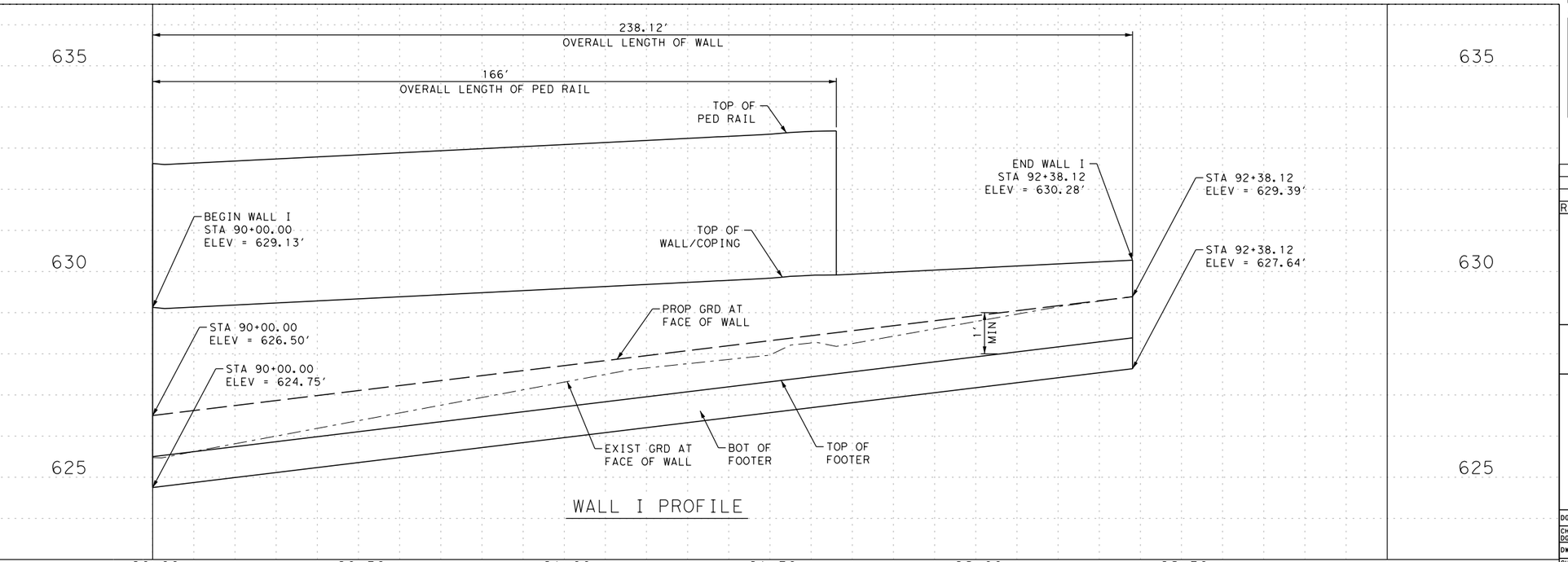

WALL I PROFILE

LEGEND

TRAFFIC FLOW ARROW
FIELD INLET
CURB INLET
DROP INLET
MANHOLE

NOTES

1. ALL RETAINING WALL MEASUREMENTS ARE TO FACE OF WALL UNLESS OTHERWISE NOTED.
2. SQUARE FOOT SURFACE AREA OF RETAINING WALL IS MEASURED BETWEEN FINISHED GRADE AT TOP OF WALL AND THE PLAN DESIGNED TOP OF LEVELING PAD. THE PLAN DESIGNED TOP OF LEVELING PAD IS SET AT A MINIMUM OF 1′ BELOW PROPOSED GROUND AT THE FACE OF WALL.
3. ANY ADJUSTMENTS MADE TO ACCOMODATE THE AVAILABLE DESIGNS WILL NOT BE MEASURED. THE QUANTITY FOR WHICH PAYMENT IS MADE WILL BE THE QUANTITY AS SHOWN IN THE PLANS.
4. SEE MSE RETAINING WALL MISC DETAILS SHEET FOR SECTION AT CORNER OF WALL.
5. SEE BORING LOGS SHEETS FOR GEOTECHNICAL INFORMATION.
6. EXISTING FEATURES ARE SHOWN SCREENED BACK; i.e. FADED.
7. SEE MISCELLANEOUS WALL DETAILS SHEETS (312-315) FOR SECTION DETAILS.

DESIGN

INTERIM REVIEW
DOCUMENT INCOMPLETE. NOT INTENDED FOR PERMIT, BIDDING OR CONSTRUCTION.
ENGINEER: TYLER PAYNE DUBE
P.E. SERIAL NO: 118612
DATE: 1/9/2020

APPROVAL

INTERIM REVIEW
DOCUMENT INCOMPLETE. NOT INTENDED FOR PERMIT, BIDDING OR CONSTRUCTION.
ENGINEER: JOHN A. TYLER
P.E. SERIAL NO: 105193
DATE: 1/9/2020

0 10 20 30 60

SCALE: PLAN 1":30′ PROFILE 1":3′

REV. NO.	DATE	DESCRIPTION	BY

PAPE-DAWSON ENGINEERS
SAN ANTONIO | AUSTIN | HOUSTON | FORT WORTH | DALLAS
2000 NW LOOP 410 | SAN ANTONIO, TX 78213 | 210.375.9000
TBPE FIRM REGISTRATION #470 | TBPLS FIRM REGISTRATION #10028800

City of New Braunfels

KLEIN RD PHASE 2

RETAINING WALL PLAN & PROFILE

WALL I

SHEET 7 OF 7

DGN:	STATE	PROJECT NO.	ROADWAY
CHK DGN:	TEXAS	NB 18-026	KLEIN RD
DWG:	COUNTY	CITY	SHEET NO.
CHK DWG:	GUADALUPE	NEW BRAUNFELS	311

Plotted on: 1/9/2020

Design Filename: H:\Projects\510\30\03\Design\Civil\Bridge\Retaining Wall\5103003rw07.dgn

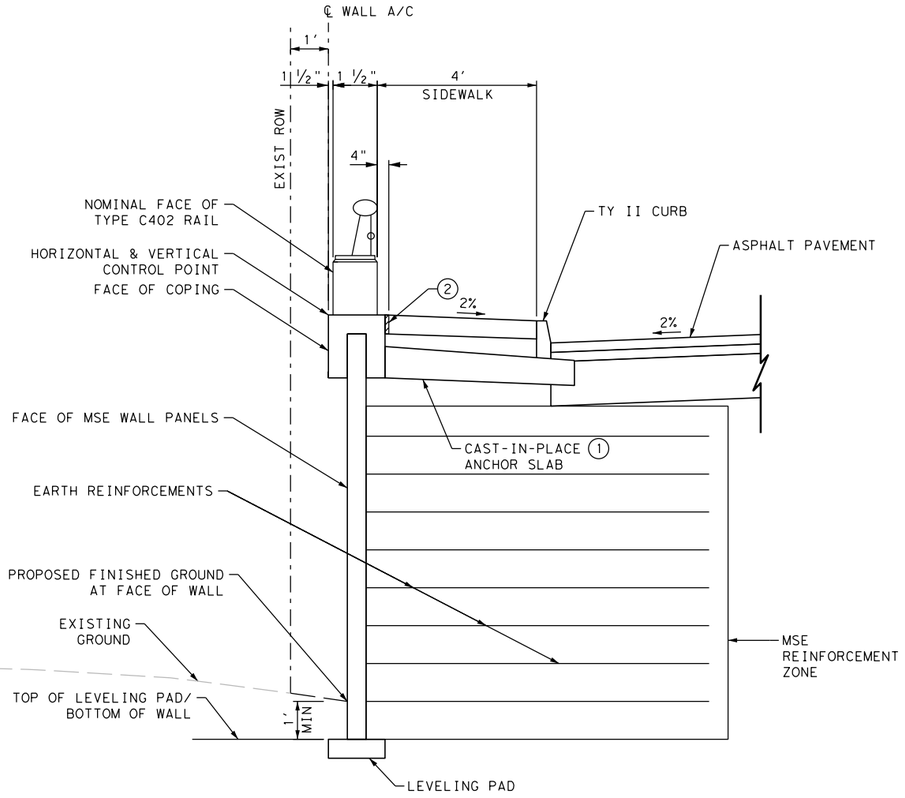

SECTION A-A
(N.T.S.)

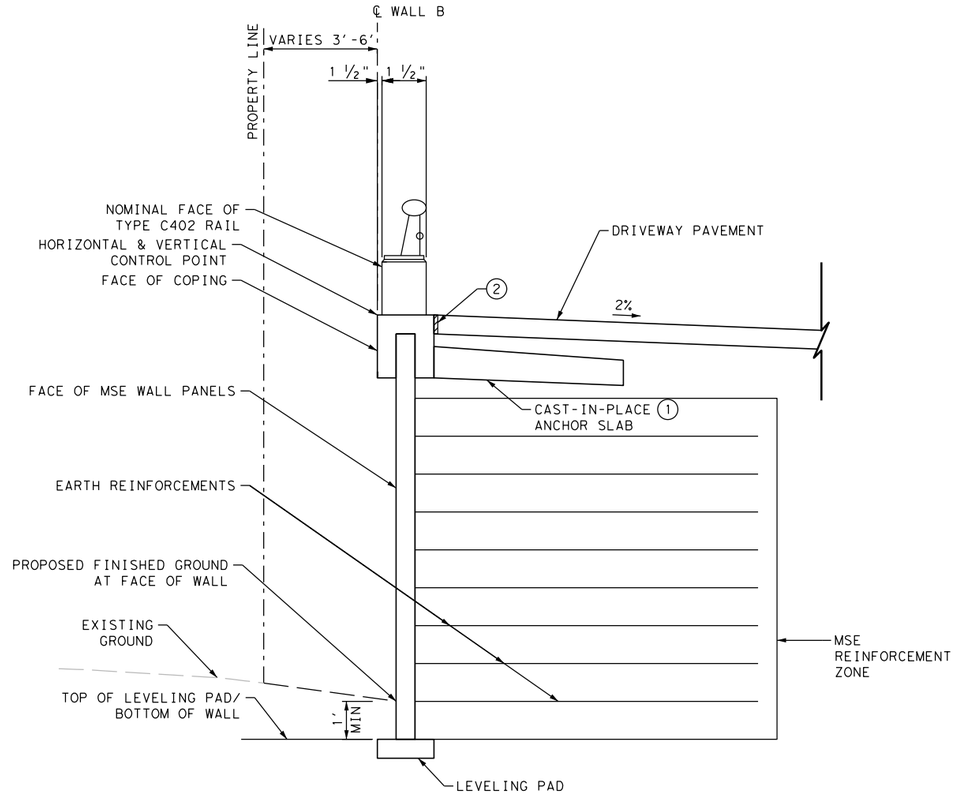

SECTION B-B
(N.T.S.)

NOTES:

(1) SEE RW (TRF) "RETAINING WALL TRAFFIC RAILING FOUNDATIONS" STANDARD FOR ADDITIONAL DETAILS.
(2) 1/2" EXPANSION JOINT FILLER MATERIAL.

DESIGN

INTERIM REVIEW
DOCUMENT INCOMPLETE. NOT INTENDED FOR PERMIT, BIDDING OR CONSTRUCTION.
ENGINEER: TYLER PAYNE DUBE
P.E. SERIAL NO: 118612
DATE: 1/9/2020

APPROVAL

INTERIM REVIEW
DOCUMENT INCOMPLETE. NOT INTENDED FOR PERMIT, BIDDING OR CONSTRUCTION.
ENGINEER: JOHN A. TYLER
P.E. SERIAL NO: 105193
DATE: 1/9/2020

0 10 20 30 60

SCALE: PLAN 1"= 30'

REV. NO.	DATE	DESCRIPTION	BY

PAPE-DAWSON ENGINEERS
SAN ANTONIO | AUSTIN | HOUSTON | FORT WORTH | DALLAS
2000 NW LOOP 410 | SAN ANTONIO, TX 78213 | 210.375.9000
TBPE FIRM REGISTRATION #470 | TBPLS FIRM REGISTRATION #10028800

City of New Braunfels

KLEIN RD PHASE 2

MISCELLANEOUS WALL DETAILS

SHEET 1 OF 4

DGN:	STATE	PROJECT NO.	ROADWAY
CHK DGN:	TEXAS	NB 18-026	KLEIN RD
DWG:	COUNTY	CITY	SHEET NO.
CHK DWG:	GUADALUPE	NEW BRAUNFELS	312

Plotted on: 1/9/2020
Design Filename: H:\Projects\510\30\03\Design\Civil\Bridge\Retaining Wall\5103003rw_detail01.dgn

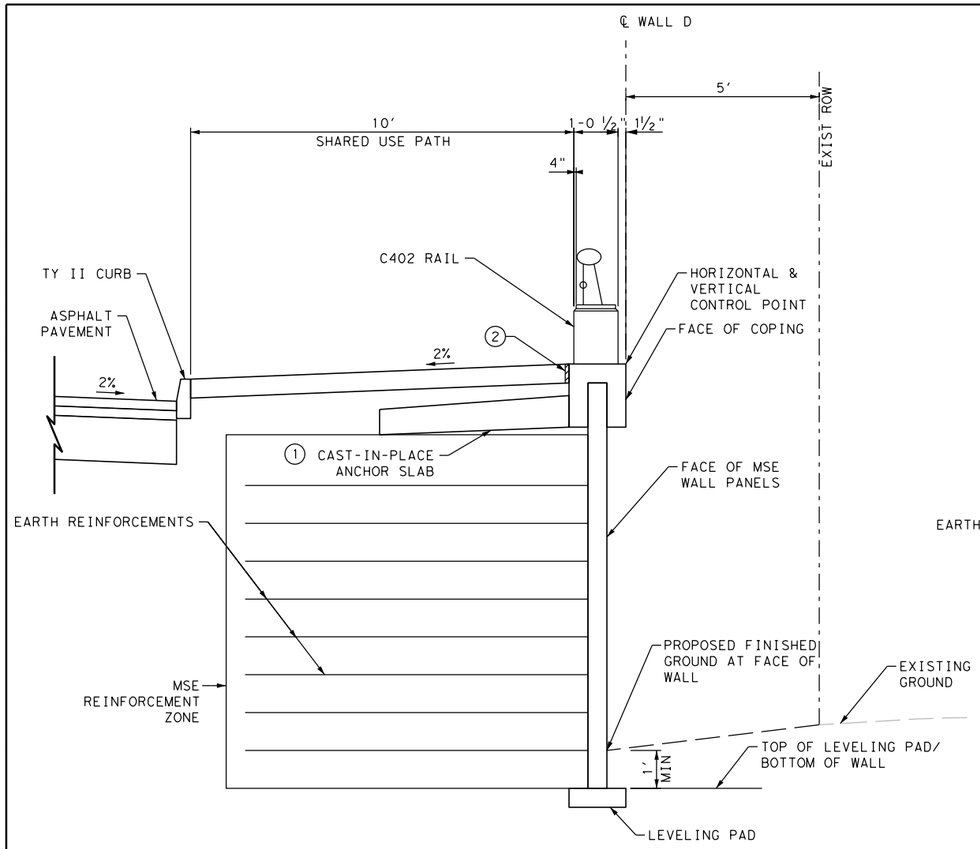

SECTION C-C
(N.T.S.)

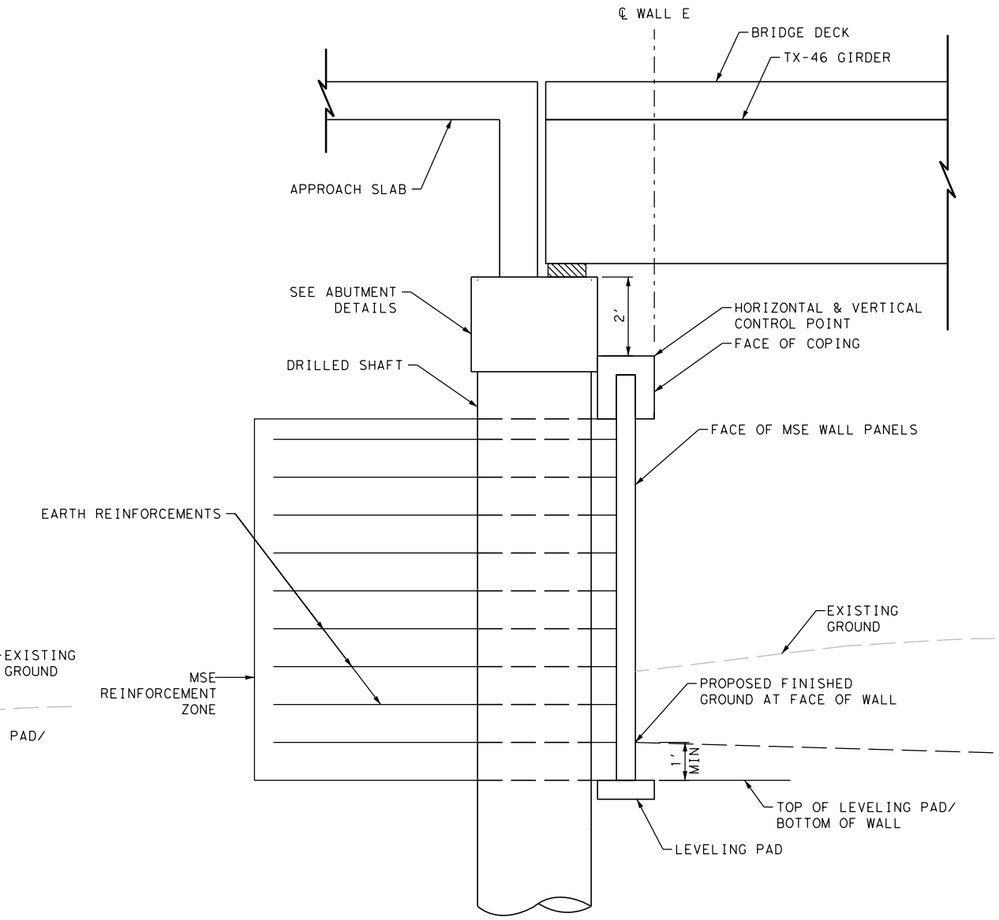

SECTION D-D
(N.T.S.)

NOTES:

1. SEE RW (TRF) "RETAINING WALL TRAFFIC RAILING FOUNDATIONS" STANDARD FOR ADDITIONAL DETAILS.
2. 1/2" EXPANSION JOINT FILLER MATERIAL.

DESIGN

INTERIM REVIEW

DOCUMENT INCOMPLETE. NOT INTENDED FOR PERMIT, BIDDING OR CONSTRUCTION.
ENGINEER: TYLER PAYNE DUBE
P.E. SERIAL NO: 118612
DATE: 1/9/2020

APPROVAL

INTERIM REVIEW

DOCUMENT INCOMPLETE. NOT INTENDED FOR PERMIT, BIDDING OR CONSTRUCTION.
ENGINEER: JOHN A. TYLER
P.E. SERIAL NO: 105193
DATE: 1/9/2020

0 10 20 30 60

SCALE: PLAN 1"= 30'

REV. NO.	DATE	DESCRIPTION	BY

PAPE-DAWSON ENGINEERS

SAN ANTONIO | AUSTIN | HOUSTON | FORT WORTH | DALLAS
2000 NW LOOP 410 | SAN ANTONIO, TX 78213 | 210.375.9000
TBPE FIRM REGISTRATION #470 | TBPLS FIRM REGISTRATION #10028800

City of New Braunfels

KLEIN RD PHASE 2

MISCELLANEOUS WALL DETAILS

SHEET 2 OF 4

DGN:	STATE	PROJECT NO.	ROADWAY
CHK DGN:	TEXAS	NB 18-026	KLEIN RD
DWG:	COUNTY	CITY	SHEET NO.
CHK DWG:	GUADALUPE	NEW BRAUNFELS	313

Plotted on: 1/9/2020

Design Filename: H:\Projects\510\30\03\Design\Civil\Bridge\Retaining Wall\5103003rw_detail02.dgn

Plotted on: 1/9/2020

Design Filename: H:\Projects\510\30\03\Design\Civil\Bridge\Retaining Wall\5103003rw_detail03.dgn

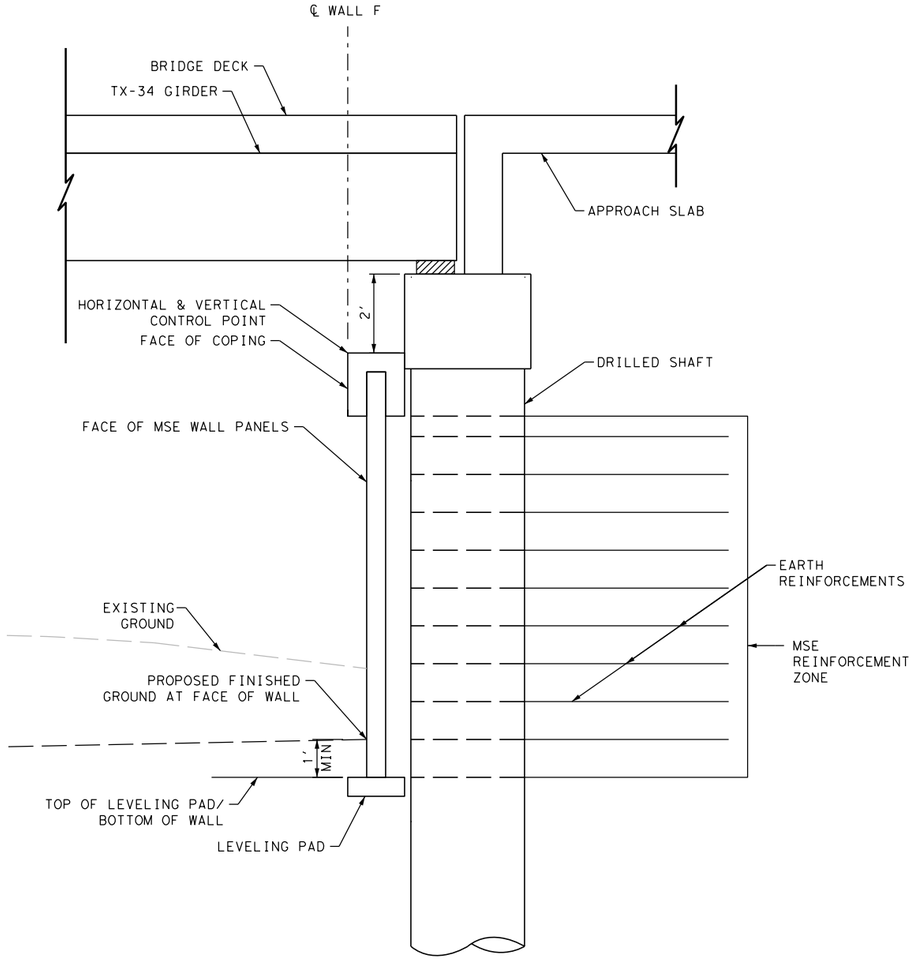

SECTION E-E
(N.T.S.)

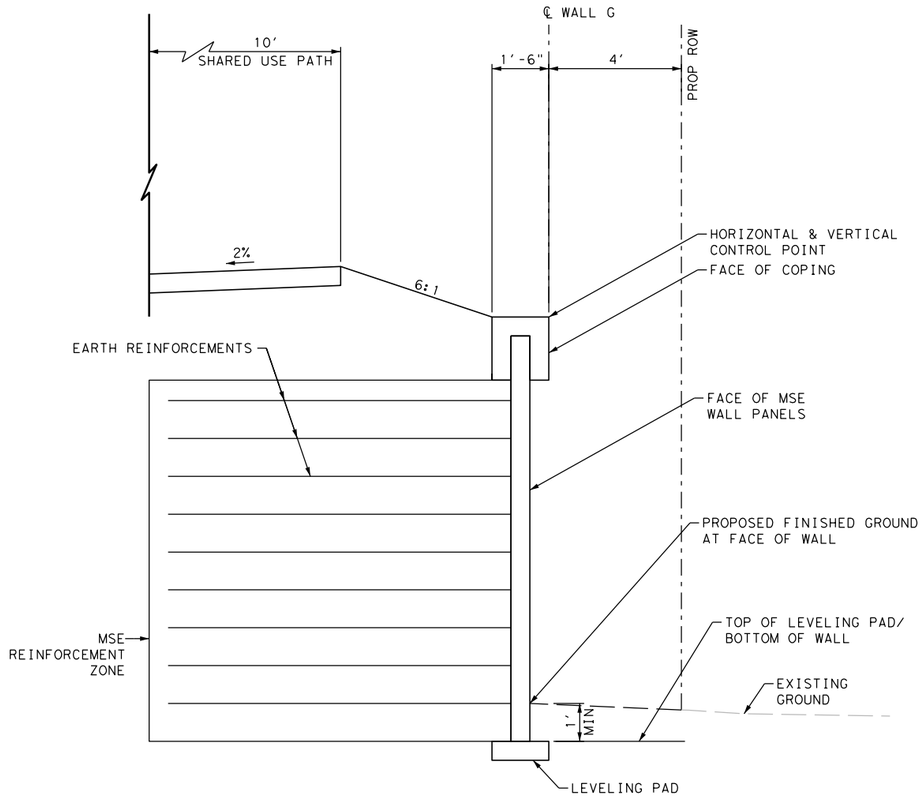

SECTION F-F
(N.T.S.)

NOTES:

1. SEE RW (TRF) "RETAINING WALL TRAFFIC RAILING FOUNDATIONS" STANDARD FOR ADDITIONAL DETAILS.
2. 1/2" EXPANSION JOINT FILLER MATERIAL.

DESIGN

INTERIM REVIEW
DOCUMENT INCOMPLETE. NOT INTENDED FOR PERMIT, BIDDING OR CONSTRUCTION.
ENGINEER: TYLER PAYNE DUBE
P.E. SERIAL NO: 118612
DATE: 1/9/2020

APPROVAL

INTERIM REVIEW
DOCUMENT INCOMPLETE. NOT INTENDED FOR PERMIT, BIDDING OR CONSTRUCTION.
ENGINEER: JOHN A. TYLER
P.E. SERIAL NO: 105193
DATE: 1/9/2020

0 10 20 30 60

SCALE: PLAN 1"= 30'

REV. NO.	DATE	DESCRIPTION	BY

PAPE-DAWSON ENGINEERS
SAN ANTONIO | AUSTIN | HOUSTON | FORT WORTH | DALLAS
2000 NW LOOP 410 | SAN ANTONIO, TX 78213 | 210.375.9000
TBPE FIRM REGISTRATION #470 | TBPLS FIRM REGISTRATION #10028800

City of New Braunfels

KLEIN RD PHASE 2

MISCELLANEOUS WALL DETAILS

SHEET 3 OF 4

DGN:	STATE	PROJECT NO.	ROADWAY
CHK DGN:	TEXAS	NB 18-026	KLEIN RD
DWG:	COUNTY	CITY	SHEET NO.
CHK DWG:	GUADALUPE	NEW BRAUNFELS	314

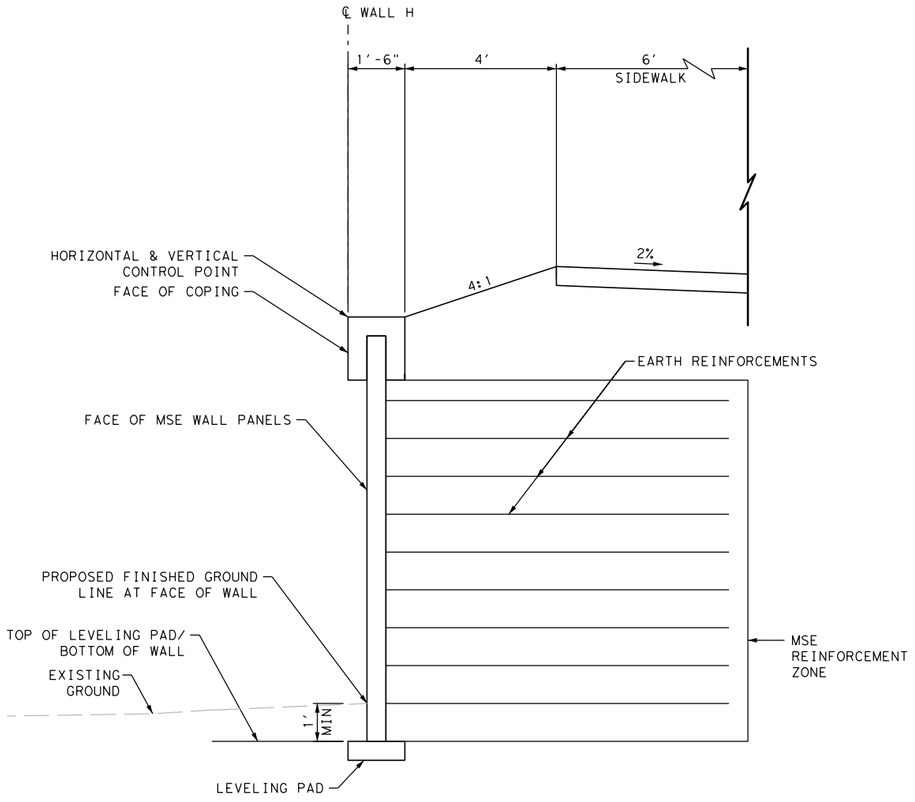

SECTION G-G
(N.T.S.)

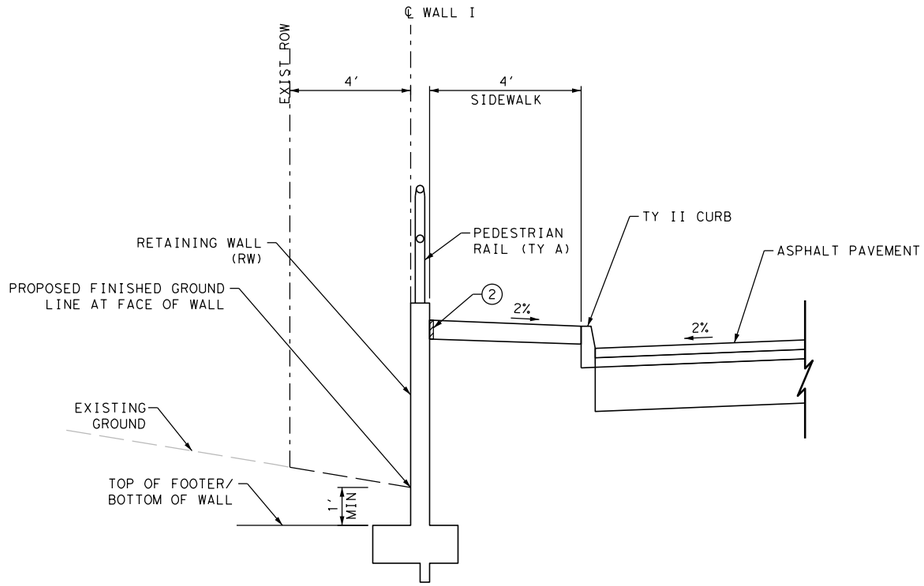

SECTION H-H
(N.T.S.)

NOTES:

1. SEE RW (TRF) "RETAINING WALL TRAFFIC RAILING FOUNDATIONS" STANDARD FOR ADDITIONAL DETAILS.
2. 1/2" EXPANSION JOINT FILLER MATERIAL.

DESIGN

INTERIM REVIEW
DOCUMENT INCOMPLETE. NOT INTENDED FOR PERMIT, BIDDING OR CONSTRUCTION.
ENGINEER: TYLER PAYNE DUBE
P.E. SERIAL NO: 118612
DATE: 1/9/2020

APPROVAL

INTERIM REVIEW
DOCUMENT INCOMPLETE. NOT INTENDED FOR PERMIT, BIDDING OR CONSTRUCTION.
ENGINEER: JOHN A. TYLER
P.E. SERIAL NO: 105193
DATE: 1/9/2020

0 10 20 30 60
SCALE: PLAN 1"= 30'

REV. NO.	DATE	DESCRIPTION	BY

PAPE-DAWSON ENGINEERS
SAN ANTONIO | AUSTIN | HOUSTON | FORT WORTH | DALLAS
2000 NW LOOP 410 | SAN ANTONIO, TX 78213 | 210.375.9000
TBPE FIRM REGISTRATION #470 | TBPLS FIRM REGISTRATION #10028800

City of New Braunfels

KLEIN RD PHASE 2

MISCELLANEOUS WALL DETAILS

SHEET 4 OF 4

DGN:	STATE	PROJECT NO.	ROADWAY
CHK DGN:	TEXAS	NB 18-026	KLEIN RD
DWG:	COUNTY	CITY	SHEET NO.
CHK DWG:	GUADALUPE	NEW BRAUNFELS	315

Plotted on: 1/9/2020

Design Filename: H:\Projects\510\30\03\Design\Civil\Bridge\Retaining Wall\5103003rw_detail04.dgn

DISCLAIMER:
The use of this standard is governed by the "Texas Engineering Practice Act". No warranty of any kind is made by TxDOT for any purpose whatsoever. TxDOT assumes no responsibility for the conversion of this standard to other formats or for incorrect results or damages resulting from its use.

DATE:
FILE:

STRUCTURE	DESIGNED GIRDERS									DEPRESSED STRAND PATTERN		CONCRETE		OPTIONAL DESIGN				
	SPAN NO.	GIRDER NO.	GIRDER TYPE	PRESTRESSING STRANDS						NO.	TO END (in)	RELEASE STRGTH (1) f'ci (ksi)	MINIMUM 28 DAY COMP STRGTH f'c (ksi)	DESIGN LOAD COMP STRESS (TOP □) (SERVICE I) fct(ksi)	DESIGN LOAD TENSILE STRESS (BOTT □) (SERVICE III) fcb(ksi)	REQUIRED MINIMUM ULTIMATE MOMENT CAPACITY (STRENGTH I) (kip-ft)	LIVE LOAD DISTRIBUTION FACTOR (2)	
				NON-STD STRAND PATTERN	TOTAL NO.	SIZE (in)	STRGTH fpu (ksi)	"e" ℄ (In)	"e" END (in)								Moment	Shear

NON-STANDARD STRAND PATTERNS

PATTERN	STRAND ARRANGEMENT AT ℄OF GIRDER

(1) Based on the following allowable stresses (ksi):

Compression = 0.65 f'ci

Tension = 0.24 $\sqrt{f'ci}$

Optional designs must likewise conform.

(2) Portion of full HL93.

DESIGN NOTES:

Designed according to AASHTO LRFD Bridge Design Specifications.

Optional designs for girders 120 feet or longer must have a calculated residual camber equal to or greater than that of the designed girder.

Prestress losses for the designed girders have been calculated for a relative humidity of percent. Optional designs must likewise conform.

FABRICATION NOTES:

Provide Class H concrete.

Provide Grade 60 reinforcing steel bars.

Use low relaxation strands, each pretensioned to 75 percent of fpu.

Strand debonding must comply with Item 424.4.2.2.2.4. Full-length debonded strands are only permitted in positions marked . Double wrap full-length debonded strands in outer most position of each row. △

When shown on this sheet, the Fabricator has the option of furnishing either the designed girder or an approved optional design. All optional design submittals must be signed, sealed and dated by a Professional Engineer registered in the State of Texas.

Seal cracks in girder ends exceeding 0.005" in width as directed by the Engineer. The fabricator is permitted to decrease the spacing of Bars R and S by providing additional bars to help limit crack width provided the decreased spacing results in no less than 1" clear between bars. The fabricator must take an approved corrective action if cracks greater than 0.005" form on a repetitive basis.

DEPRESSED STRAND DESIGNS:

Locate strands for the designed girder as low as possible on the 2" grid system unless a non-standard strand pattern is indicated. Fill row "2.5", then row "4.5", then row "6.5", etc., beginning each row in the "A" position and working outward until the required number of strands is reached. All strands in the "A" position must be depressed, maintaining the 2" spacing so that, at the girder ends, the upper two strands are in the position shown in the table.

To complete this sheet input the girder designs in the table and the relative humidity under Design Notes. In all cases, remove this block. This sheet must be signed, sealed, and dated by a registered Professional Engineer.

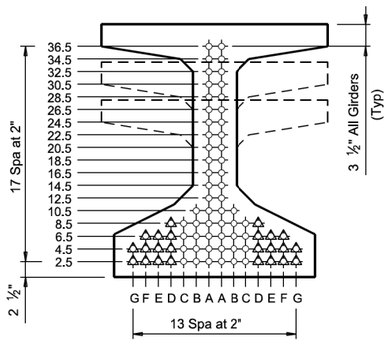

TYPE Tx28, Tx34 & Tx40

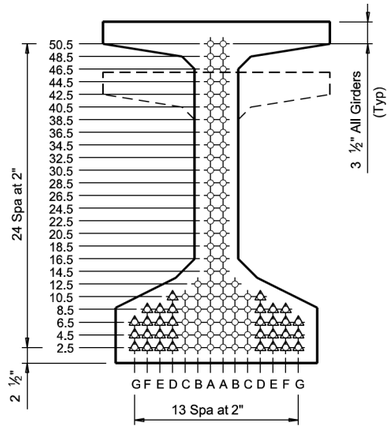

TYPE Tx46 & Tx54

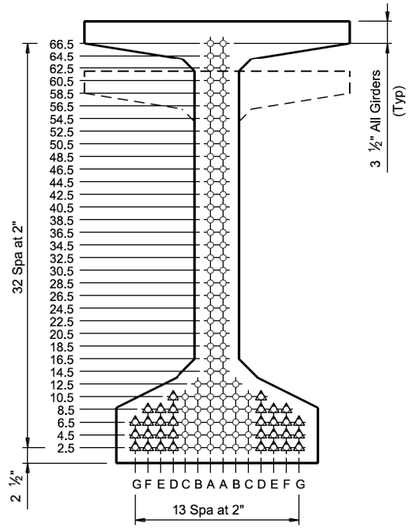

TYPE Tx62 & Tx70

HL93 LOADING

THIS DOCUMENT IS RELEASED FOR THE PURPOSE OF PRELIMINARY REVIEW UNDER THE AUTHORITY OF A.M. STONE, P.E. 91549 ON 09/29/19. IT IS NOT TO BE USED FOR CONSTRUCTION OR PERMIT PURPOSES.

Texas Department of Transportation

Bridge Division Standard

PRESTRESSED CONCRETE I-GIRDER DESIGNS (NON-STANDARD SPANS)

IGND

FILE: 19PDENG014-BEAM DESIGN.dgn	DN: TxDOT	CK: TxDOT	DW: EFC	CK: TAR
©TxDOT August 2017	CONT	SECT	JOB	HIGHWAY
REVISIONS 10-19: Modified for depressed strands only.	DIST	COUNTY		SHEET NO. 316

DISCLAIMER:
The use of this standard is governed by the "Texas Engineering Practice Act". No warranty of any kind is made by TxDOT for any purpose whatsoever. TxDOT assumes no responsibility for the conversion of this standard to other formats or for incorrect results or damages resulting from its use.

DATE:
FILE:

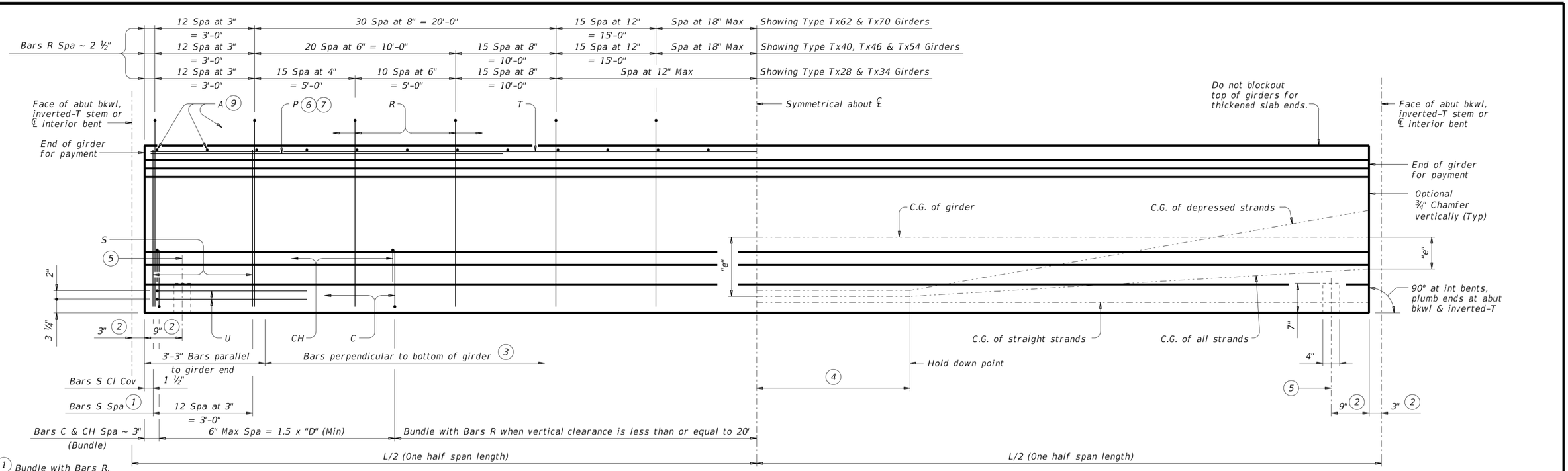

GIRDER ELEVATION

(1) Bundle with Bars R.

(2) Measured along ℄ Girder at interior bents; perpendicular to abutment bkwl or inverted-T stem.

(3) The average of the top and bottom spacing of Bars R cannot exceed the required spacing.

(4) L/20, but not less than 5'-0" (-0,+2').

(5) ℄ 4" x 1 ½" Vertical Slotted Hole at doweled girder end [labeled (D) on Bridge Layout]. Required for outside girder only or as shown on substructure details. Anchorage holes may be tapered (4 ¾" x 1 ⅝") at base. If holes are formed with sheet metal, forms may be left in place.

(6) Bars P (#6 x 15'-0") required in Tx62 and Tx70 girders. At the fabricator's option bars larger than #6 may be used. When L is less than 50 ft, Bars P are to be the same length as Bars T.

(7) Bars P (#6 x 15'-0") are only required in Tx28, Tx34, Tx40, Tx46, and Tx54 girders when "e" at girder ends exceeds 0.25 x "D". At the fabricator's option bars larger than #6 may be used. When L is less than 50 ft, Bars P are to be the same length as Bars T.

(8) 1 ⅜" Clear Cover to Bars S.

(9) Space Bars A at 6" Max for girders requiring overhang bracket hangers. Space at 12" Max for all other girders. Tie to Bars R as necessary. See standard IGMS for "Deck Forming Notes".

(10) Based on 155 pcf total weight of concrete and reinforcing steel.

(11) Smooth trowel finish on the slab overhang side of exterior girder.

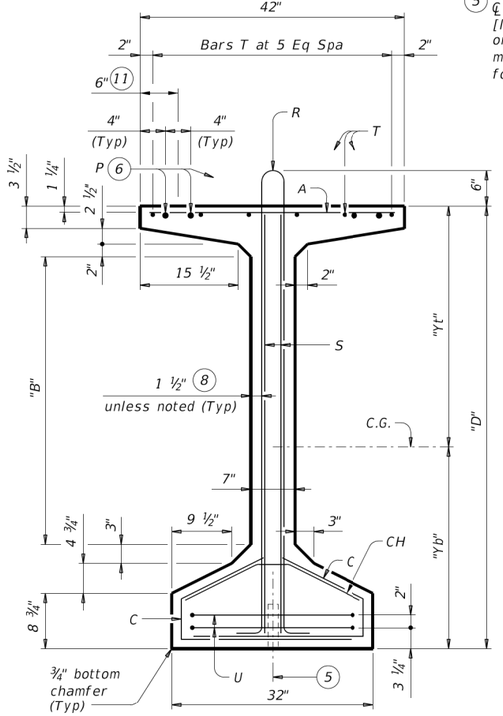

TYPE Tx62 & Tx70

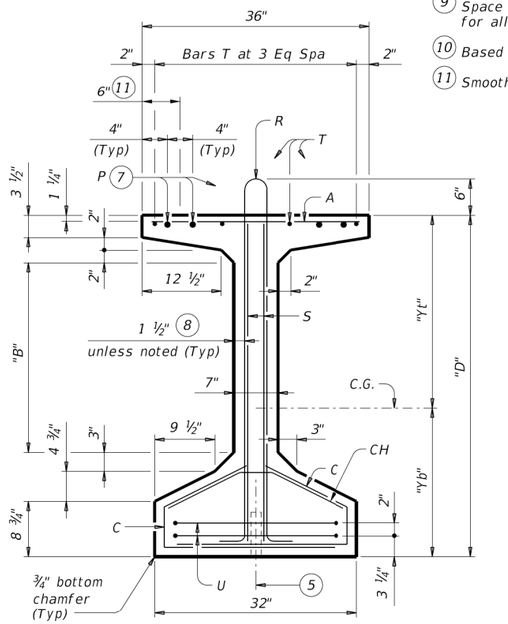

TYPE Tx46 & Tx54

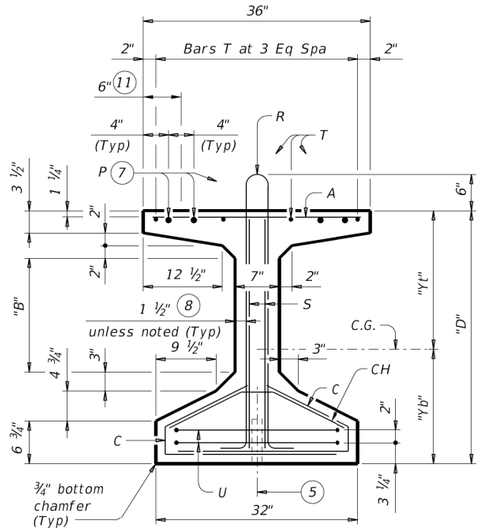

TYPE Tx28, Tx34 & Tx40

GIRDER DIMENSIONS AND SECTION PROPERTIES

Girder Type	"D" (in.)	"B" (in.)	"Yt" (in.)	"Yb" (in.)	Area (in.²)	"Ix" (in.⁴)	"Iy" (in.⁴)	Weight (10) (plf)
Tx28	28	6	15.02	12.98	585	52,772	40,559	630
Tx34	34	12	18.49	15.51	627	88,355	40,731	675
Tx40	40	18	21.90	18.10	669	134,990	40,902	720
Tx46	46	22	25.90	20.10	761	198,089	46,478	819
Tx54	54	30	30.49	23.51	817	299,740	46,707	880
Tx62	62	37 ½"	33.72	28.28	910	463,072	57,351	980
Tx70	70	45 ½"	38.09	31.91	966	628,747	57,579	1,040

GENERAL NOTES:

Designed according to AASHTO LRFD Bridge Design Specifications.
Provide Class H concrete.
Provide Grade 60 reinforcing steel.
An equal area of deformed Welded Wire Reinforcement (WWR) (ASTM A1064) may be substituted for Bars A, C, R or T unless otherwise noted.
It is permissible for bars or strands to come in contact with materials used in forming anchor holes.

Cover dimensions are clear dimensions, unless noted otherwise.
Reinforcing bar dimensions shown are out-to-out of bar.

HL93 LOADING

SHEET 1 OF 2

Texas Department of Transportation

Bridge Division Standard

PRESTRESSED CONCRETE I-GIRDER DETAILS

IGD

FILE: igdstds1-19.dgn	DN: TxDOT	CK: JMH	DW: JTR	CK: TAR
©TxDOT August 2017	CONT	SECT	JOB	HIGHWAY
REVISIONS				
10-19: Added Bars C and CH full length for VC<= 20'	DIST	COUNTY		SHEET NO.
				317

DISCLAIMER:
The use of this standard is governed by the "Texas Engineering Practice Act". No warranty of any kind is made by TxDOT for any purpose whatsoever. TxDOT assumes no responsibility for the conversion of this standard to other formats or for incorrect results or damages resulting from its use.

DATE:
FILE:

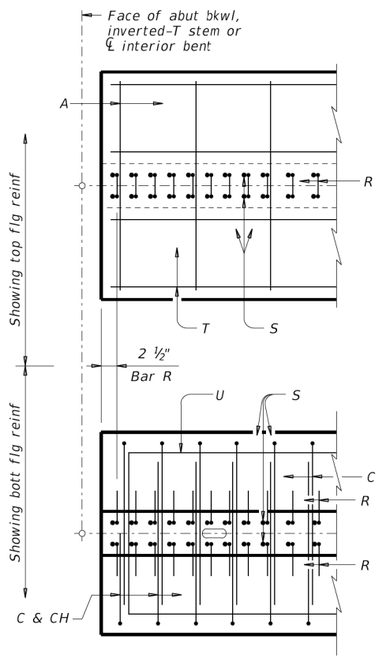

0° SKEW

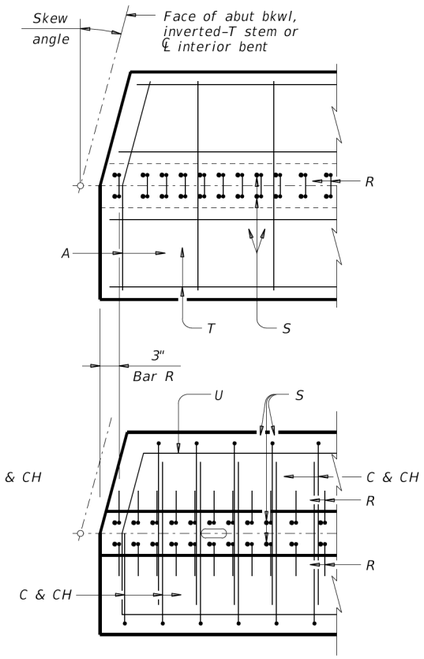

15° SKEW

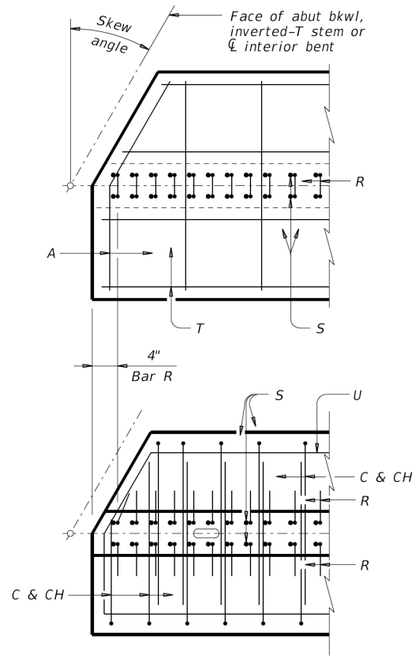

30° SKEW

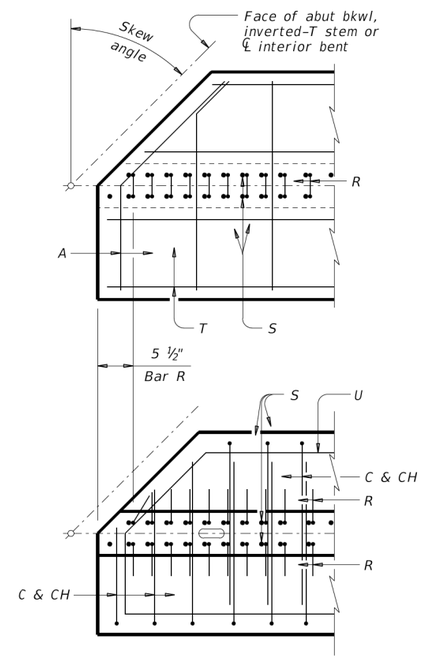

45° SKEW

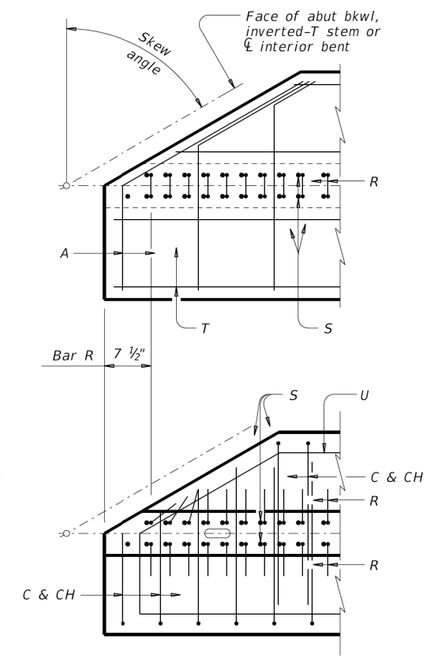

60° SKEW

PLAN OF GIRDER ENDS (12)

To control top flange cracking that may occur during form removal, additional top flange reinforcing may be placed as shown in girder ends at the Fabricator's option.

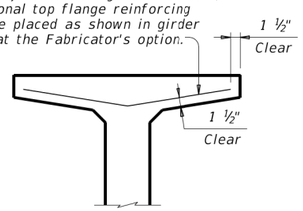

OPTIONAL TOP FLANGE REINFORCING DETAIL

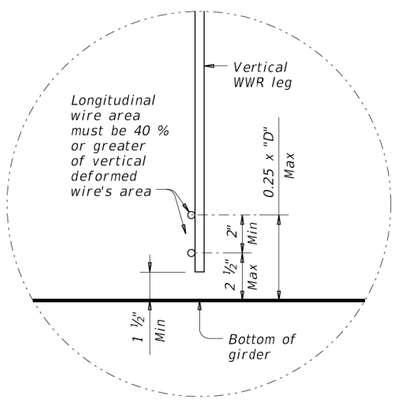

OPTIONAL WELDED WIRE REINFORCEMENT (WWR) DETAIL

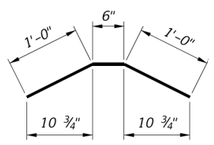

BARS CH (#4)

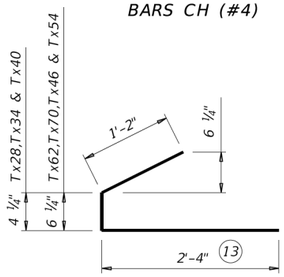

BARS C (#4)

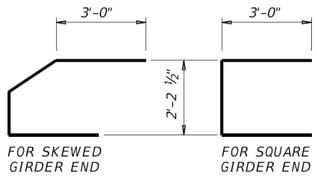

BARS U (#5)

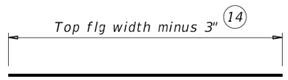

BARS A (#3)

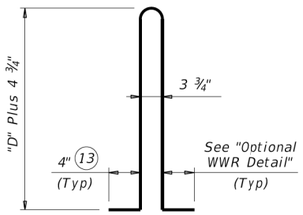

BARS R (#4) (16)

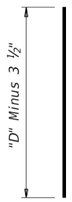

BARS S (#6)

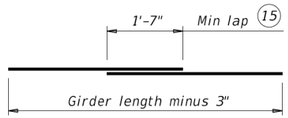

BARS T (#4)

(12) Reinforcing patterns shown are provided as guides to determine reinforcement placement in skewed ends. Place Bars S as close to girder end as cover requirements permit, which may prevent them to be bundled with Bars R.

(13) Bars may be cut or bent at skewed end as required.

(14) Increase as necessary for bars at skewed end.

(15) No portion of bar less than 10 ft.

(16) For Welded Wire Reinforcement (WWR) option, area of Bars R may be reduced in proportion to the increase in reinforcement yield strength over 60 ksi. Yield strength of WWR is limited to 75 ksi.

HL93 LOADING SHEET 2 OF 2

Texas Department of Transportation

Bridge Division Standard

PRESTRESSED CONCRETE I-GIRDER DETAILS

IGD

FILE: igdstds1-19.dgn	DN: TxDOT	CK: JMH	DW: JTR	CK: TAR
©TxDOT August 2017	CONT	SECT	JOB	HIGHWAY
REVISIONS				
10-19: Added Bars C and CH full length for VC<= 20'	DIST	COUNTY		SHEET NO.
				318

DISCLAIMER:
The use of this standard is governed by the "Texas Engineering Practice Act". No warranty of any kind is made by TxDOT for any purpose whatsoever. TxDOT assumes no responsibility for the conversion of this standard to other formats or for incorrect results or damages resulting from its use.

DATE:
FILE:

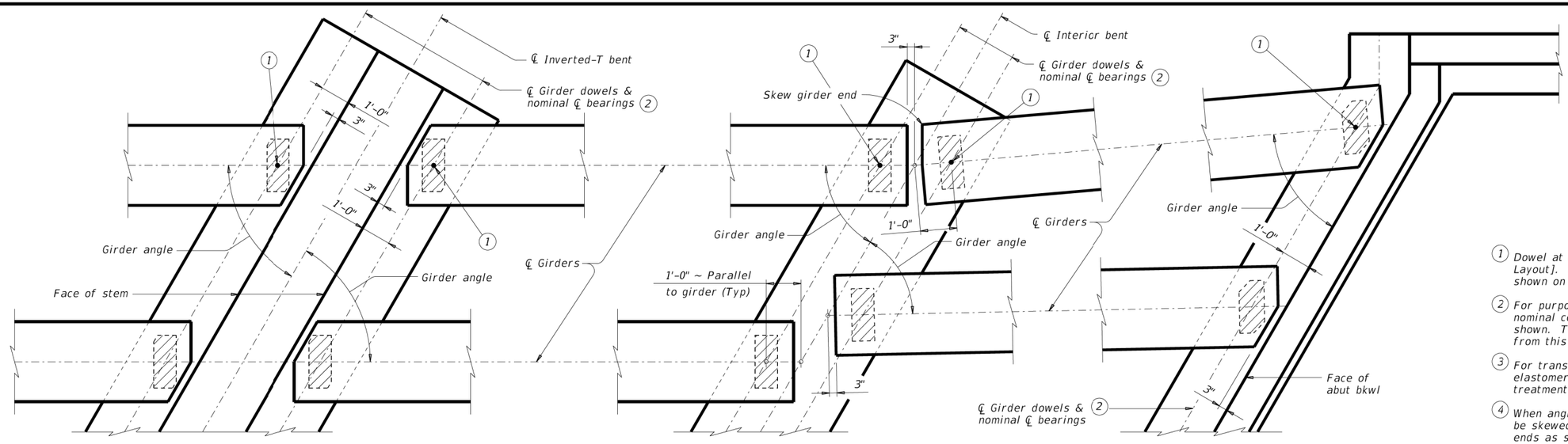

AT INVERTED-T BENT W/SKEW

AT CONVENTIONAL INTERIOR BENT W/SKEW

AT ABUTMENT W/SKEW (3)

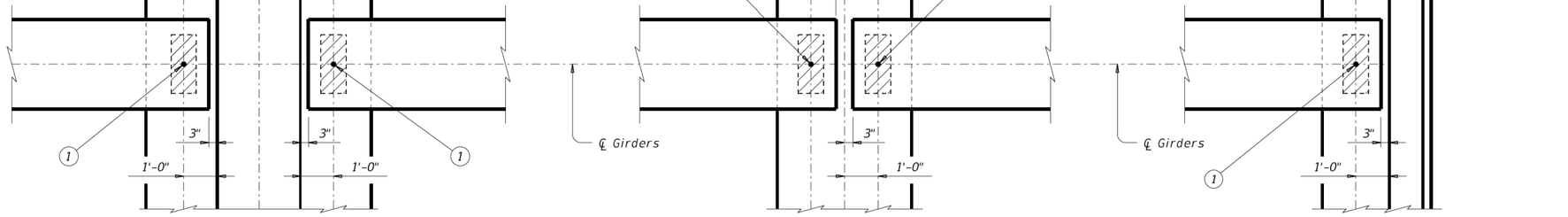

AT INVERTED-T BENT

AT CONVENTIONAL INTERIOR BENT

AT ABUTMENT (3)

GIRDER END DETAILS

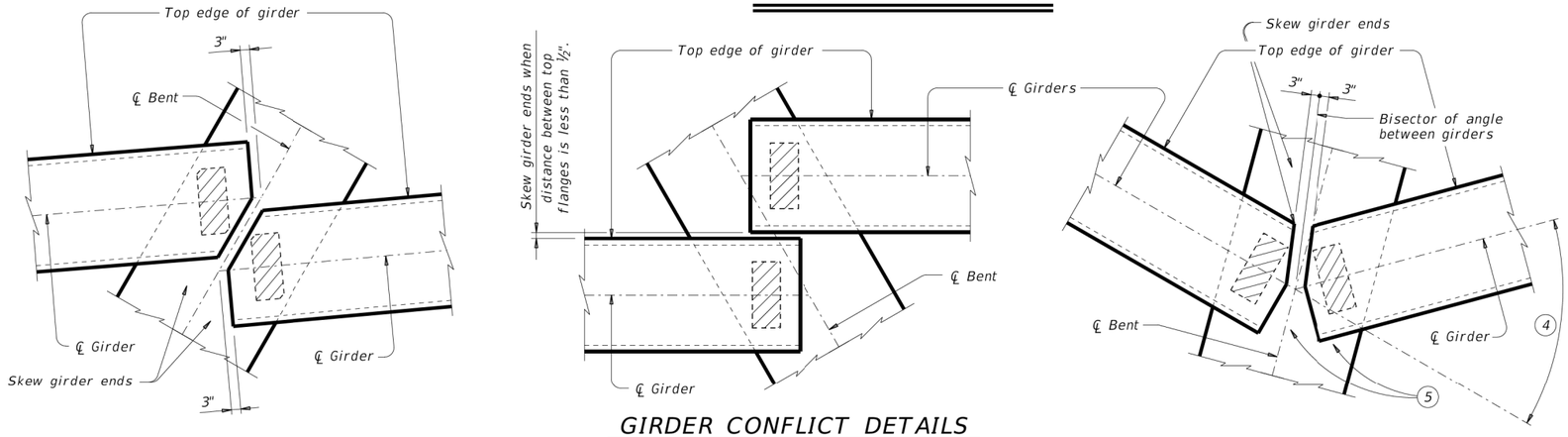

GIRDER CONFLICT DETAILS

GENERAL NOTES:

These details accommodate skew angles up to 60°.

Shop drawings for approval are required.

A bearing layout which identifies location and orientation of all bearings must be developed by the bearing fabricator. Permanently mark each bearing in accordance with the bearing layout. A copy of the bearing layout is to be provided to the Engineer.

Cost of furnishing and installing elastomeric bearings, including beveled and embedded steel plates, must be included in unit price bid for "Prestressed Concrete Girders".

HL93 LOADING SHEET 1 OF 3

Texas Department of Transportation

Bridge Division Standard

ELASTOMERIC BEARING AND GIRDER END DETAILS

PRESTR CONCRETE I-GIRDERS

IGEB

FILE: igebsts1-17.dgn	DN: AEE	CK: JMH	DW: JTR	CK: TxDOT
©TxDOT August 2017	CONT	SECT	JOB	HIGHWAY
REVISIONS				
	DIST	COUNTY		SHEET NO.
				319

DISCLAIMER:
The use of this standard is governed by the "Texas Engineering Practice Act". No warranty of any kind is made by TxDOT for any purpose whatsoever. TxDOT assumes no responsibility for the conversion of this standard to other formats or for incorrect results or damages resulting from its use.

DATE:
FILE:

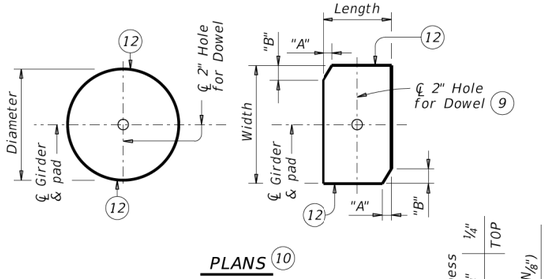

PLANS (10)

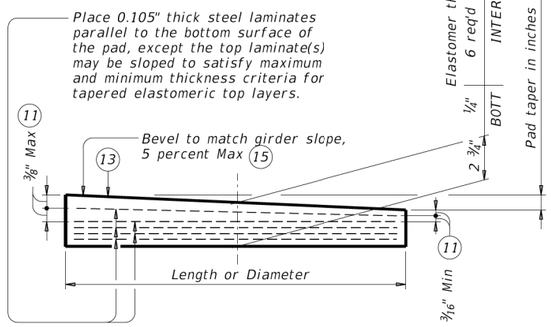

ELEVATION

LAMINATED ELASTOMERIC BEARING PAD

(50 DUROMETER)

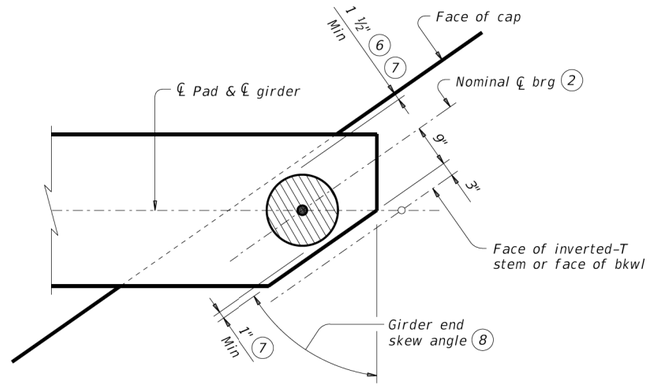

ROUND BEARINGS FOR SKEWED GIRDER ENDS AT FACE OF INVERTED-T STEM OR FACE OF BKWL

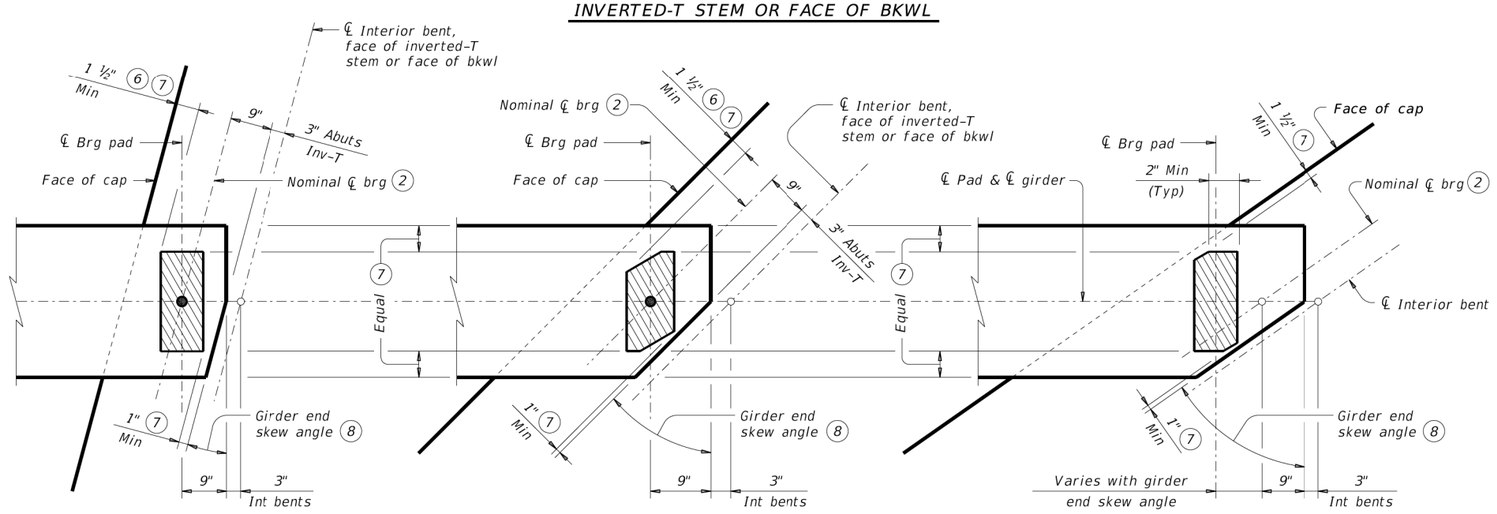

SKEWED GIRDER ENDS AT INT BENTS, FACE OF INVERTED-T STEM OR FACE OF BKWL

SKEWED GIRDER ENDS AT CONVENTIONAL INTERIOR BENTS (16)

(NO GIRDER DOWELS)

BEARING PAD PLACEMENT DIAGRAMS

TABLE OF MINIMUM SUBSTRUCTURE DIMENSIONS (14)

Girder Type	Abutments: Face of Bkwl to Face of Cap	Int Bents: Overall Cap Width	Inv-T Bents: Corbel Width
Tx28 thru Tx54	1'-9"	3'-6"	1'-10 ½"
Tx62 & Tx70	2'-0"	4'-0"	2'-1 ½"

TABLE OF BEARING PAD DIMENSIONS

Bent Type	Girder Type	Bearing Type (13)	Girder End Skew Angle Range	Pad Size Lgth x Wdth	Pad Clip Dimensions "A"	Pad Clip Dimensions "B"
ABUTMENTS, INVERTED-T AND TRANSITION BENTS WITH BACKWALLS	Tx28,Tx34, Tx40,Tx46 & Tx54	G-1-"N"	0° thru 21°	8" x 21"	---	---
		G-2-"N"	21°+ thru 30°	8" x 21"	1 ½"	2 ½"
		G-3-"N"	30°+ thru 45°	9" x 21"	4 ½"	4 ½"
		G-4-"N"	45°+ thru 60°	15" Dia	---	---
	Tx62 & Tx70	G-5-"N"	0° thru 21°	9" x 21"	---	---
		G-6-"N"	21°+ thru 30°	9" x 21"	1 ½"	2 ½"
		G-7-"N"	30°+ thru 45°	10" x 21"	4 ½"	4 ½"
		G-8-"N"	45°+ thru 60°	10" x 21"	7 ¼"	4 ¼"
CONVENTIONAL INTERIOR BENTS	Tx28,Tx34, Tx40,Tx46 & Tx54	---	---	---	---	---
		---	---	---	---	---
		G-1-"N"	0° thru 60°	8" x 21"	---	---
	Tx62 & Tx70	G-5-"N"	0° thru 60°	9" x 21"	---	---
CONVENTIONAL INTERIOR BENTS WITH SKEWED GIRDER ENDS (GIRDER CONFLICTS) (16)	Tx28,Tx34, Tx40,Tx46 & Tx54	G-1-"N"	0° thru 18°	8" x 21"	---	---
		G-2-"N"	18°+ thru 30°	8" x 21"	1 ½"	2 ½"
		G-9-"N"	30°+ thru 45°	8" x 21"	3"	3"
		G-10-"N"	45°+ thru 60°	9" x 21"	6"	3 ½"
	Tx62 & Tx70	G-5-"N"	0° thru 18°	9" x 21"	---	---
		G-5-"N"	18°+ thru 30°	9" x 21"	---	---
		G-11-"N"	30°+ thru 45°	9" x 21"	1 ½"	1 ½"
		G-12-"N"	45°+ thru 60°	9" x 21"	3"	1 ¾"

(2) For purposes of computing bearing seat elevations, nominal centerline of bearing must be defined as shown. The actual center of bearing pad may vary from this line.

(6) 3" for inverted-T.

(7) Place centerline pad as near nominal centerline bearing as possible between limits shown.

(8) Girder end skew angle is equal to 90° minus the girder angle except at some conflicting girders.

(9) Provide 2" dia hole only at locations required. See Substructure details for location.

(10) See Table of Bearing Pad Dimensions for dimensions.

(11) Maximum and minimum layer thicknesses shown are for elastomer only, on tapered layers.

(12) Locate Permanent Mark here.

(13) Indicate BEARING TYPE on all pads. For tapered pads, locate BEARING TYPE on the high side. The Fabricator must include the value of "N" (amount of taper in ⅛" increments) in this mark.
Examples: N=0, (for 0" taper)
N=1, (for ⅛" taper)
N=2, (for ¼" taper)
(etc.)
Fabricated pad top surface slope must not vary from plan girder slope by more than $\left(\frac{0.0625"}{\text{Length or Dia}}\right)$ IN/IN.

(14) Substructure dimensions must satisfy the minimums provided to accommodate the elastomeric bearings shown on this standard.

(15) See sheet 3 of 3 for beveled plate use when slopes exceed 5 percent.

(16) If girder end is skewed for a girder conflict at an interior bent and a beveled sole plate is required, use bearing type for abutments at this location. Location of bearing centerline is to be set as for abutments in this case.

HL93 LOADING SHEET 2 OF 3

Texas Department of Transportation | Bridge Division Standard

ELASTOMERIC BEARING AND GIRDER END DETAILS

PRESTR CONCRETE I-GIRDERS

IGEB

FILE: igebsts1-17.dgn	DN: AEE	CK: JMH	DW: JTR	CK: TxDOT
©TxDOT August 2017 REVISIONS	CONT	SECT	JOB	HIGHWAY
	DIST	COUNTY		SHEET NO. 320

DISCLAIMER:
The use of this standard is governed by the "Texas Engineering Practice Act". No warranty of any kind is made by TxDOT for any purpose whatsoever. TxDOT assumes no responsibility for the conversion of this standard to other formats or for incorrect results or damages resulting from its use.

DATE:
FILE:

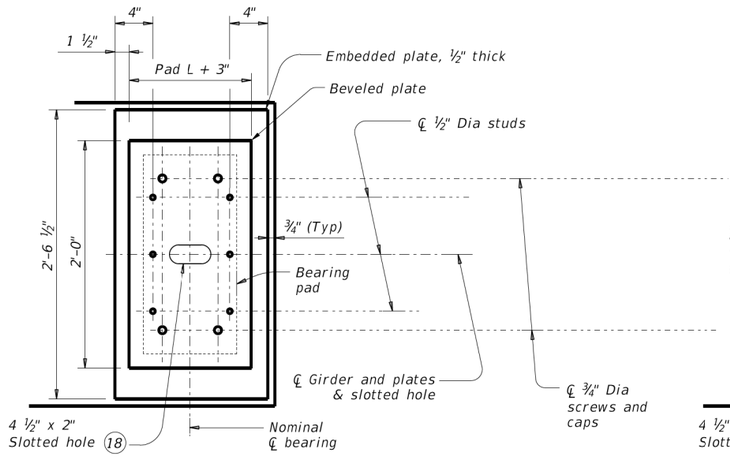

NORMAL GIRDER END
RECTANGULAR BEARING PAD

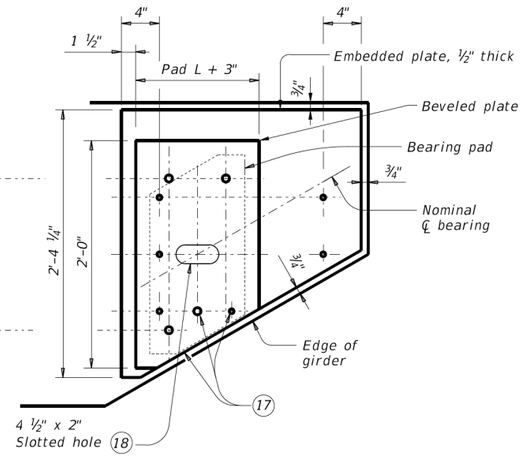

SKEWED GIRDER END
CLIPPED RECTANGULAR BEARING PAD

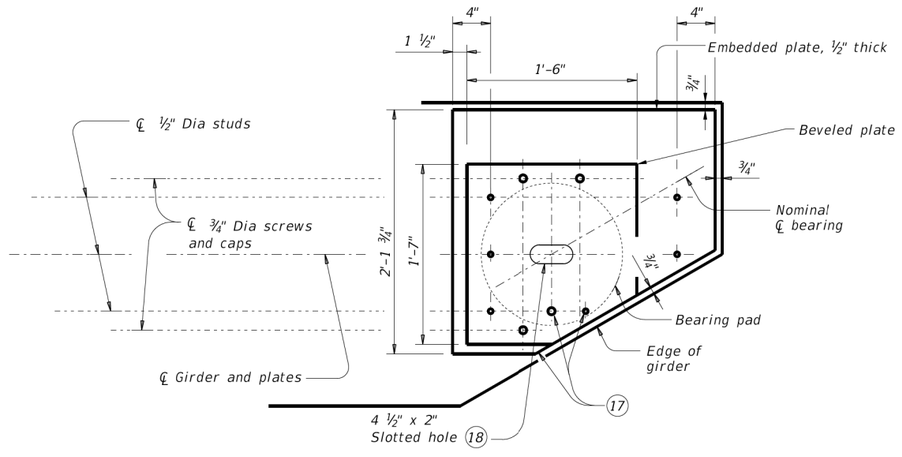

SKEWED GIRDER END
15" DIA BEARING PAD

PLAN VIEW OF SOLE PLATE DETAILS

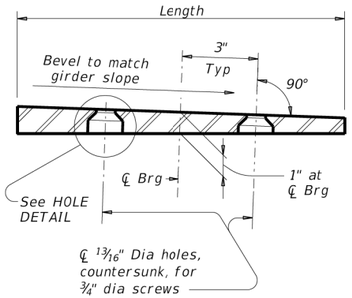

SECTION

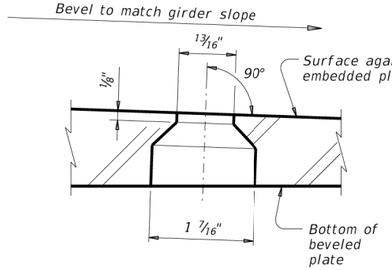

HOLE DETAIL

17 Cut beveled and embedded plates to match girder end skew. Adjust location of screw and stud as shown when necessary.

18 Slotted hole is required at doweled girder end locations.

SOLE PLATE NOTES:

Provide constant thickness elastomeric bearings with beveled and embedded steel sole plates in accordance with these details when the girder slope exceeds 5 percent or if otherwise required in the plans. Provide for all girders in the span.

On the shop drawings, dimension sole plates to the nearest 1⁄16" based on required thickness at centerline of bearing and slope of girder. Thickness tolerance variation from the approved shop drawings is 1⁄16"+/-, except variation from a plane parallel to the theoretical top surface can not exceed 1⁄16" total. Bearing surface tolerances listed in Item 424 apply to embedded and beveled plates.

Steel plate must conform to ASTM A36, A572 Gr 50, or A709 Gr 36 or Gr 50. Hot dip galvanize both the embedded plate and beveled sole plate after fabrication. Seal weld caps to embedded plate before galvanizing.

When determining if relocation of screw holes and studs are necessary for skewed girder ends, minimum clearance from screw or stud centerline to plate edge is 1.25".

Tap threads in the embedded plate only. Drill and tap prior to galvanizing.

¾" Dia screws must be electroplated, socket flat head countersunk cap screws conforming to ASTM F835. Electroplating must conform to ASTM B633, SC 2, Type I. Provide screws long enough to maintain a ¾" minimum embedment into the embedded plate and galvanized cap. Provide galvanized steel caps (16 ga Min) with a nominal 1" inside diameter and deep enough to accommodate the screws, but not less than ½" deep or deeper than 1".

Install beveled sole plates prior to shipping girders. Installed screw heads must not protrude below the bottom of the beveled plate.

BEVELED PLATE DETAILS

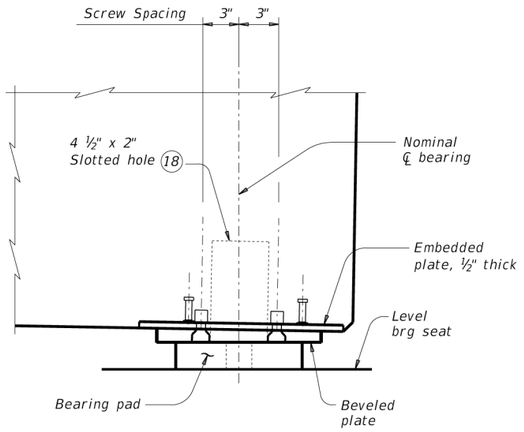

SIDE ELEVATION

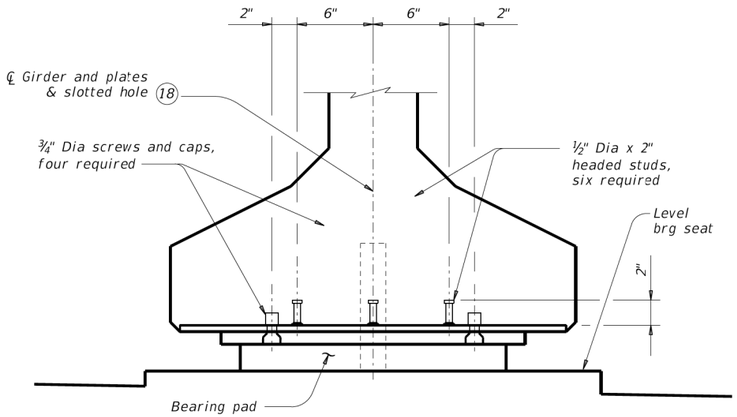

END ELEVATION
Showing normal girder end.

GIRDER DETAILS

HL93 LOADING SHEET 3 OF 3

Texas Department of Transportation
Bridge Division Standard

ELASTOMERIC BEARING AND GIRDER END DETAILS
PRESTR CONCRETE I-GIRDERS

IGEB

FILE: igebsts1-17.dgn	DN: AEE	CK: JMH	DW: JTR	CK: TxDOT
©TxDOT August 2017 REVISIONS	CONT	SECT	JOB	HIGHWAY
	DIST	COUNTY		SHEET NO. 321

DISCLAIMER:
The use of this standard is governed by the "Texas Engineering Practice Act". No warranty of any kind is made by TxDOT for any purpose whatsoever. TxDOT assumes no responsibility for the conversion of this standard to other formats or for incorrect results or damages resulting from its use.

DATE:
FILE:

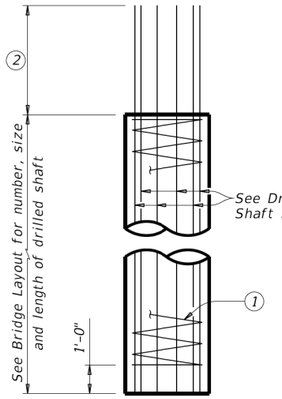

ABUTMENTS, WINGWALLS AND MULTI-DRILLED SHAFT FOOTINGS

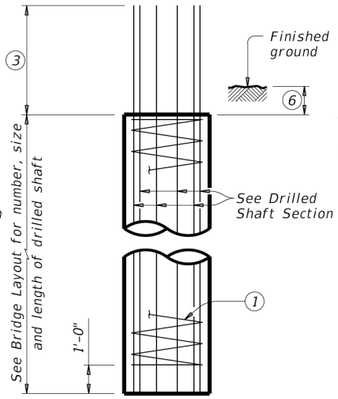

INTERIOR BENTS DRILLED SHAFT DIA EQUAL TO COLUMN DIA

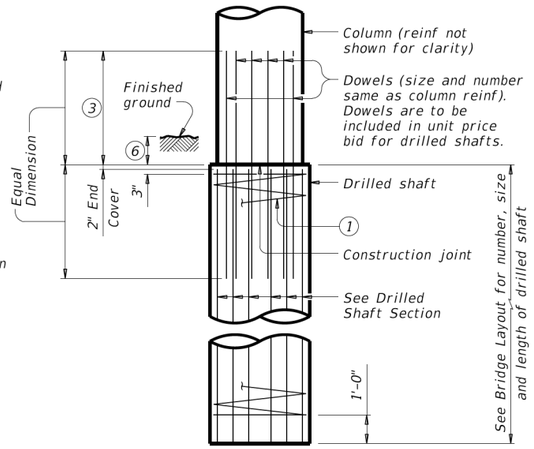

INTERIOR BENTS DRILLED SHAFT DIA GREATER THAN COLUMN DIA

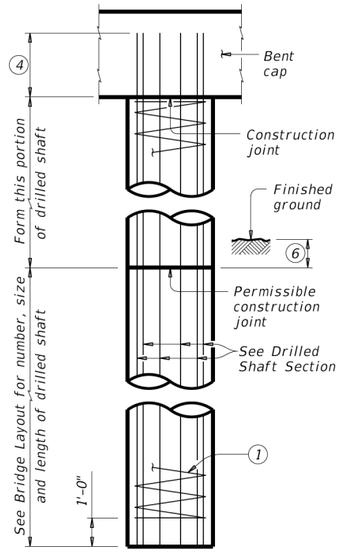

OPTIONAL INTERIOR BENT DRILLED SHAFT DETAIL (5)

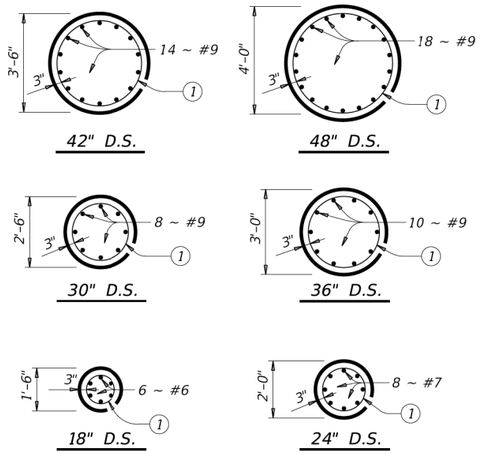

DRILLED SHAFT SECTIONS

DRILLED SHAFT DETAILS

TABLE OF PILE EMBEDMENT	
Pile Type	Embedment Depth (Ft)
16" Sq Concrete 18" Sq Concrete HP14 Steel HP16 Steel	1'-0"
20" Sq Concrete 24" Sq Concrete HP18 Steel	1'-6"

See Prestressed Concrete Piling (CP) standard for additional details on concrete pile embedment.

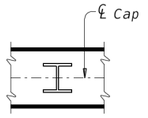

ORIENTATION OF STEEL H-PILING

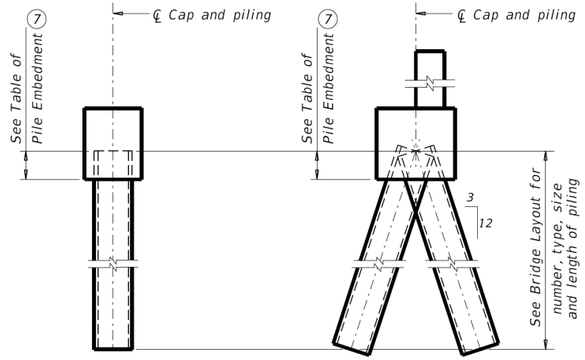

PILING DETAILS
(Concrete or steel H)

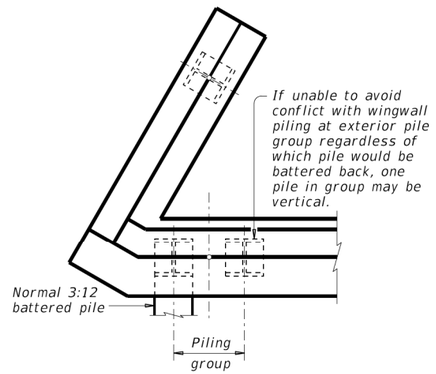

DETAIL "A"
(Showing plan view of a 30° skewed abutment)

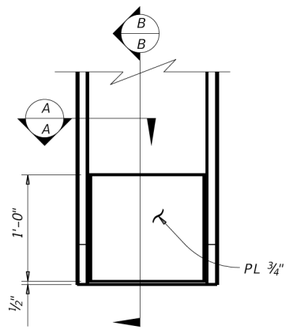

ELEVATION

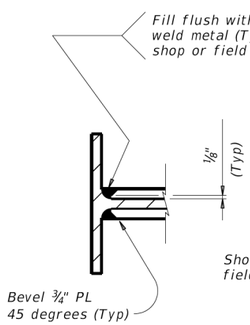

SECTION A-A

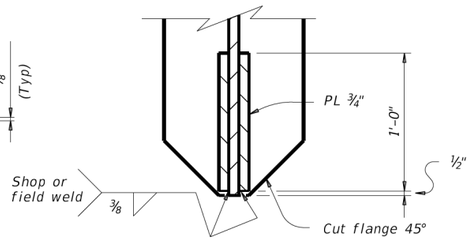

SECTION B-B

STEEL H-PILE TIP REINFORCEMENT

See Item 407 "Steel Piling" to determine when tip reinforcement is required and for options to the details shown.

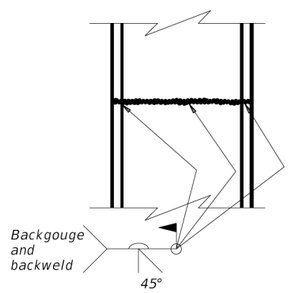

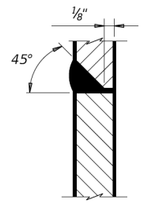

SECTION THRU FLANGE OR WEB

STEEL H-PILE SPLICE DETAIL

Use when required.

(1) #3 spiral at 6" pitch (one and a half flat turns top and bottom).

(2) Min extension into supported element:
#6 Bars = 1'-11"
#7 Bars = 2'-0"
#9 Bars = 2'-3"

(3) Min lap with column reinf:
#7 Bars = 2'-11"
#9 Bars = 3'-9"

(4) Min extension into supported element:
#6 Bars = 1'-11"
#7 Bars = 2'-3"
#9 Bars = 2'-9"

(5) Drilled shafts may extend to the bottom of bent caps for "H" heights of 6 ft and less (as shown on the Bridge Layout), if approved. This option can only be used when the drilled shaft diameter equals the column diameter. Obtain approval of the forming method above the ground line prior to construction. No adjustments in payment will be made if this option is used.

(6) 1'-0" Min, unless shown otherwise on plans.

(7) Or as shown on plans.

Texas Department of Transportation

Bridge Division Standard

COMMON FOUNDATION DETAILS

FD

FILE: fdstde01-19.dgn	DN: TxDOT	CK: TxDOT	DW: TxDOT	CK: TxDOT
©TxDOT April 2019	CONT	SECT	JOB	HIGHWAY
REVISIONS				
	DIST	COUNTY		SHEET NO.
				322

DISCLAIMER:
The use of this standard is governed by the "Texas Engineering Practice Act". No warranty of any kind is made by TxDOT for any purpose whatsoever. TxDOT assumes no responsibility for the conversion of this standard to other formats or for incorrect results or damages resulting from its use.

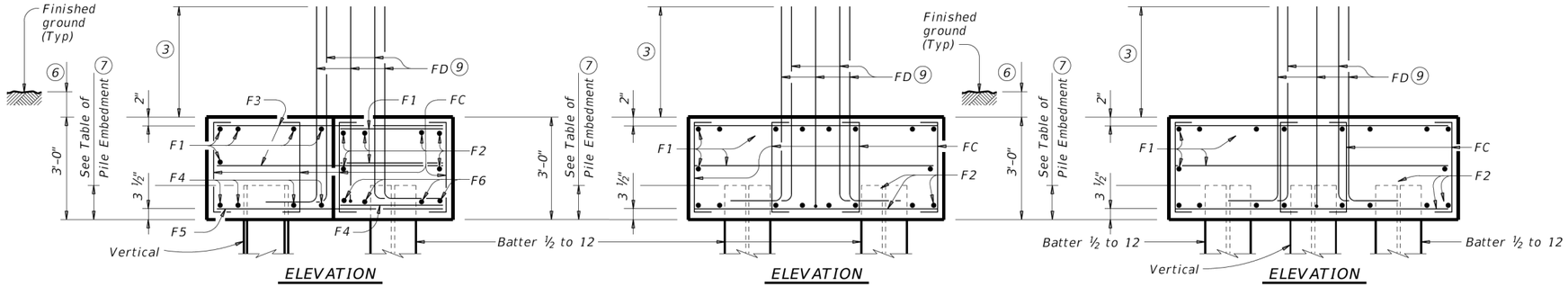

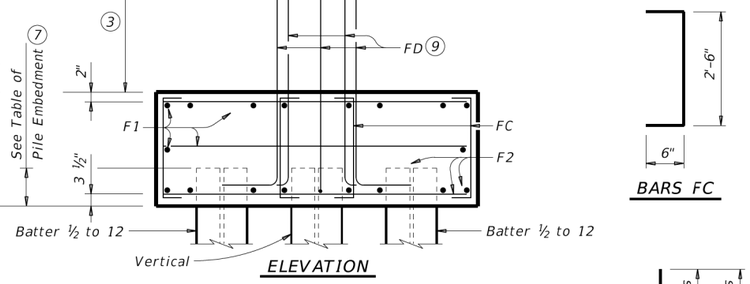

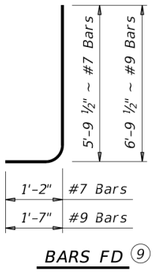

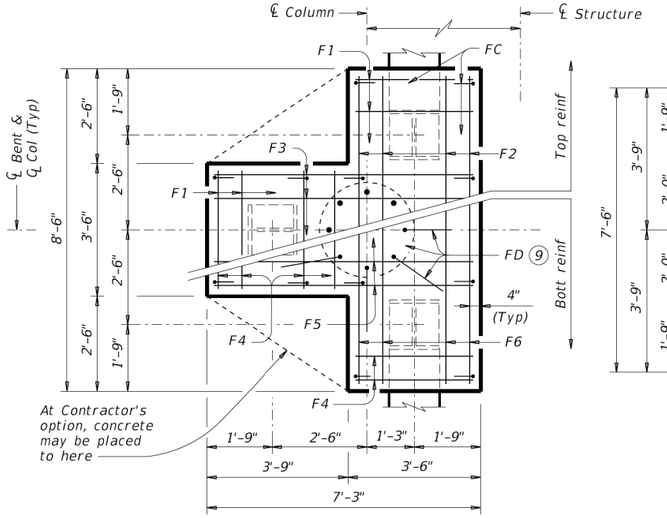

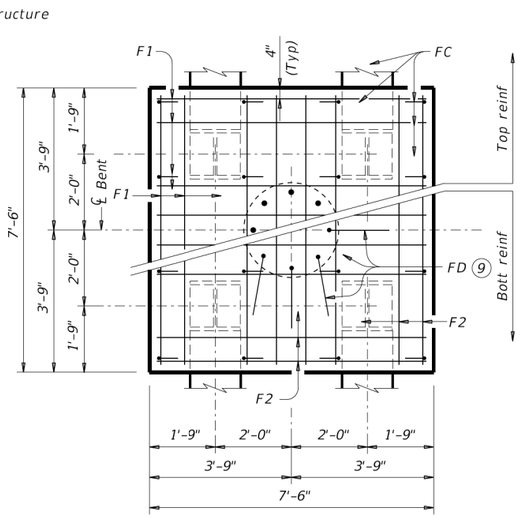

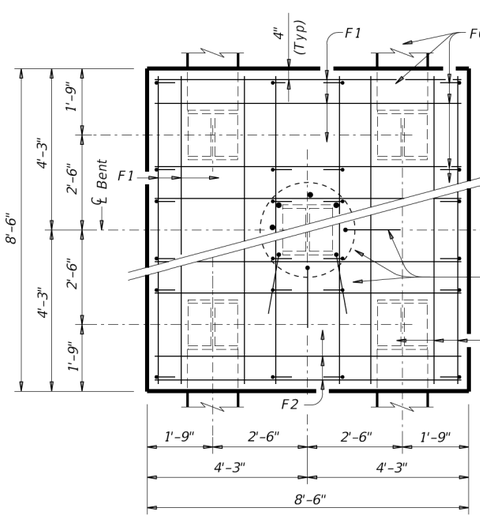

TABLE OF FOOTING QUANTITIES FOR 30" COLUMNS

ONE 3 PILE FOOTING				
Bar	No.	Size	Length	Weight
F1	11	#4	3'- 2"	23
F2	6	#4	8'- 2"	33
F3	6	#4	6'- 11"	28
F4	8	#9	3'- 2"	86
F5	4	#9	6'- 11"	94
F6	4	#9	8'- 2"	111
FC	12	#4	3'- 6"	28
FD (10)	8	#9	8'- 8"	231
Reinforcing Steel			Lb	606
Class "C" Concrete			CY	4.8

ONE 4 PILE FOOTING				
Bar	No.	Size	Length	Weight
F1	20	#4	7'- 2"	96
F2	16	#8	7'- 2"	306
FC	16	#4	3'- 6"	37
FD (11)	8	#9	8'- 8"	231
Reinforcing Steel			Lb	670
Class "C" Concrete			CY	6.3

ONE 5 PILE FOOTING				
Bar	No.	Size	Length	Weight
F1	20	#4	8'- 2"	109
F2	16	#9	8'- 2"	444
FC	24	#4	3'- 6"	56
FD (11)	8	#9	8'- 6"	231
Reinforcing Steel			Lb	840
Class "C" Concrete			CY	8.0

CONSTRUCTION NOTES:

See Bridge Layout for foundation type required. Use these foundation details unless shown otherwise.

Drive piling under abutment wingwalls to a minimum resistance of 10 Tons/Pile unless shown otherwise.

Provide Class C Concrete (f'c = 3,600 psi), unless shown otherwise.

Provide Grade 60 reinforcing steel.

Galvanize reinforcing if shown elsewhere in the plans.

Provide bar laps for drilled shaft reinforcing, where required, as follows:

Uncoated or galvanized (#6) ~ 2'-6"
Uncoated or galvanized (#7) ~ 2'-11"
Uncoated or galvanized (#9) ~ 3'-9"

GENERAL NOTES:

Designed according to AASHTO LRFD Bridge Design Specifications.

Cover dimensions are clear dimensions, unless noted otherwise.
Reinforcing bar dimensions shown are out-to-out of bar.

DESIGNER NOTES:

Do not use the drilled shaft details shown on this standard for retaining wall, noise wall, barrier, or sign foundations without structural evaluation.

Do not use the footings shown on this standard in direct contact with salt water or exposed to salt water spray.

Maximum allowable pile loads for the footings shown are :

72 Tons/Pile with 24" Dia Columns
80 Tons/Pile with 30" Dia Columns
100 Tons/Pile with 36" Dia Columns
120 Tons/Pile with 42" Dia Columns

(3) Min lap with column reinf:
#7 Bars = 2'-11"
#9 Bars = 3'-9"

(6) 1'-0" Min, unless shown otherwise on plans.

(7) Or as shown on plans.

(8) See Bridge Layout for type, size and length of piling.

(9) Number and size of FD bars must match column reinforcing. Tie FD bars to the top of the bottom reinforcing mat.

(10) For 24" columns, use #7 FD bars (7'-1") in place of #9 bars and deduct 116 lbs. For 36" columns, add 2 FD bars (55 lbs).

(11) For 24" columns, use #7 FD bars (7'-1") in place of #9 bars and deduct 116 lbs. For 36" columns, add 2 FD bars (55 lbs). For 42" columns, add 6 FD bars (172 lbs) (42" columns disallowed on 3 Pile Footings)

Texas Department of Transportation | Bridge Division Standard

COMMON FOUNDATION DETAILS

FD

FILE: fdstde01-19.dgn	DN: TxDOT	CK: TxDOT	DW: TxDOT	CK: TxDOT
©TxDOT April 2019	CONT	SECT	JOB	HIGHWAY
REVISIONS				
	DIST	COUNTY		SHEET NO.
				323

DATE:
FILE:

DISCLAIMER:
The use of this standard is governed by the "Texas Engineering Practice Act". No warranty of any kind is made by TxDOT for any purpose whatsoever. TxDOT assumes no responsibility for the conversion of this standard to other formats or for incorrect results or damages resulting from its use.

DATE:
FILE:

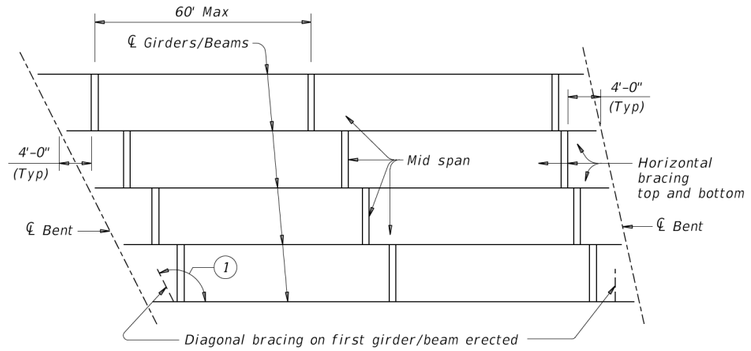

ERECTION BRACING

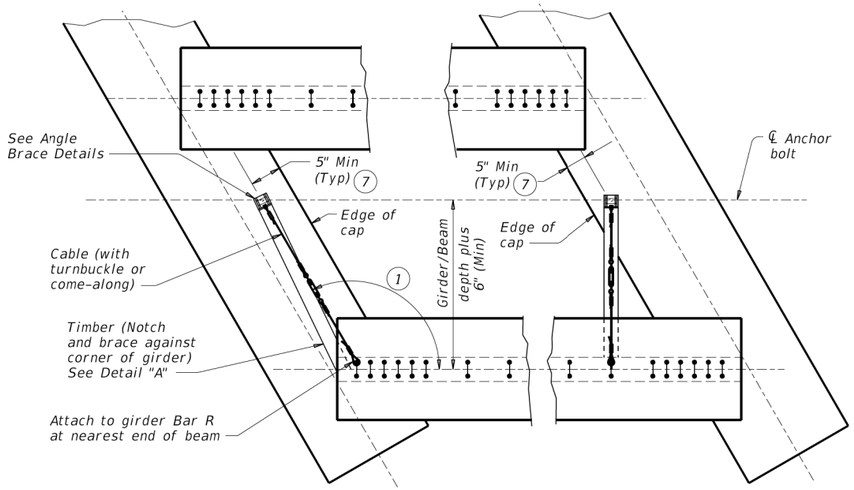

PLAN

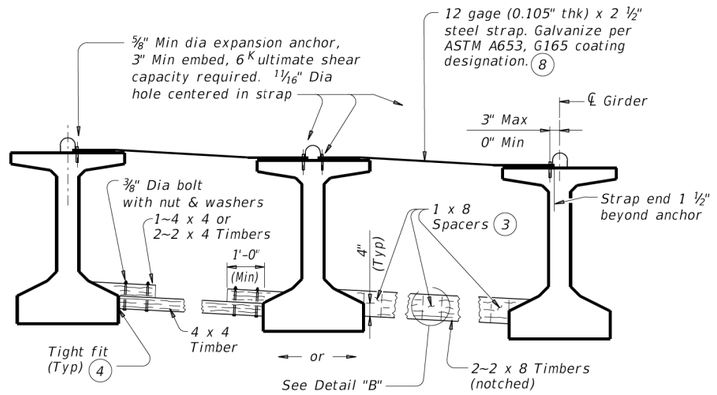

FOR ERECTION BRACING, OPTION 1

(This option is not allowed when slab is formed with PMDF or plywood.)

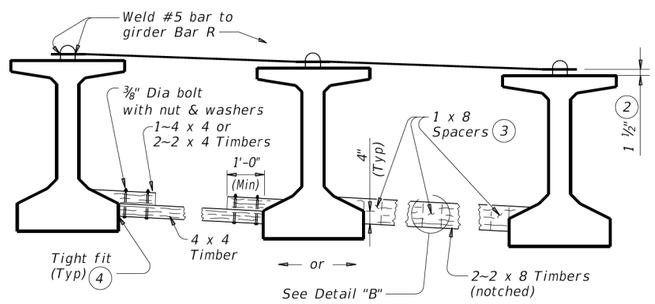

FOR ERECTION BRACING, OPTION 2

HORIZONTAL BRACING DETAILS 5

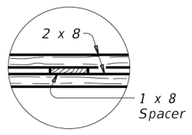

PLAN

DETAIL "B"

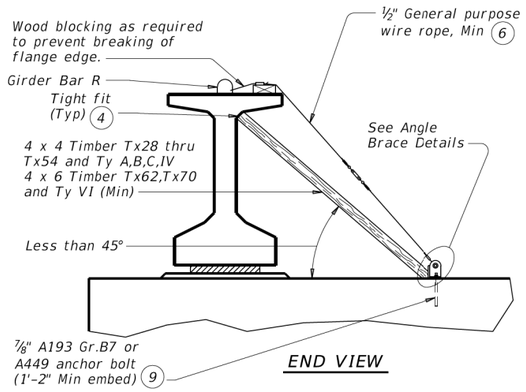

END VIEW

DIAGONAL BRACING DETAILS 5

(To be used on both ends of the first girder/beam erected in the span in each phase.)

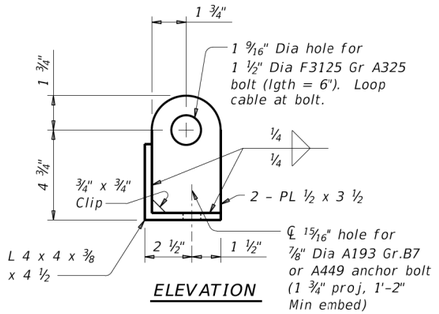

ELEVATION

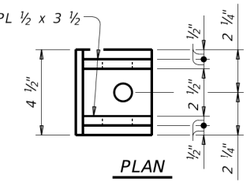

PLAN

ANGLE BRACE DETAILS

HAULING & ERECTION:

The Contractor's attention is directed to the possible lateral instability of prestressed concrete girders and beams over 130' long, especially during hauling and erection. The use of the following methods to improve stability is encouraged: Locate lifting devices at the maximum practical distance from girder ends; use external lateral stiffening devices during hauling and erection; lift with vertical lines using two machines; and take care in handling to minimize inertial and impact forces.

ERECTION BRACING:

Erection bracing details shown are considered the minimum for fulfilling the bracing requirements of Item 425.

Required erection bracing must be placed immediately after erection of each girder and remain in place until additional bracing as required for slab placement is in place. This standard is needed in all cases to meet requirements for Slab Placement Bracing.

PHASED CONSTRUCTION:

Place erection and slab placement bracing for all girders in a phase as shown in these details. For phases after first, also place erection and slab placement bracing between outer girder of completed phase and adjacent girder of current phase. When the phase construction joint is between girders, top bracing can be omitted.

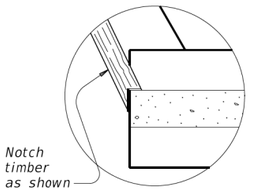

DETAIL "A"

(1) If angle shown exceeds 120 degrees, move diagonal brace to other side of girder/beam and place square to girder/beam. This may prevent exterior girder from being erected first.

(2) Place and weld #5 bars as shown during erection. If forming deck with prestressed panels, bars can be temporarily removed, one at a time, during panel erection. Re-install bar prior to additional panel erection. Bars can rest on panels and be bent down and welded to girder Bars R (See Sheet 2 of 2).

(3) Clear distance between spacers must not exceed 3'. Nail together with 16d nails.

(4) Use wedges as necessary to obtain tight fit. Nail wedges to timbers.

(5) Pressure treated landscape timbers can not be used.

(6) All hardware used with cable must be able to develop a minimum 25 kips breaking strength. Use thimbles at all loops in cable. Install cable clamps with saddles bearing against the live end and U-bolts bearing aginst the dead end.

(7) It is acceptable to tie anchor bolts to cap reinforcement.

(8) Prior to installing, field bend strap to lay flush on both girders' top flange and slope between flange tips.

(9) Anchor bolt may be drilled and epoxied in place. Provide 25k minimum pullout. Core drill hole.

Texas Department of Transportation

Bridge Division Standard

MINIMUM ERECTION AND BRACING REQUIREMENTS
PRESTRESSED CONCRETE I-GIRDERS AND I-BEAMS

MEBR(C)

FILE: mebcsts1-17.dgn	DN: TxDOT	CK: TxDOT	DW: TxDOT	CK: TxDOT
©TxDOT August 2017 REVISIONS	CONT	SECT	JOB	HIGHWAY
	DIST	COUNTY		SHEET NO.
				324

DISCLAIMER:
The use of this standard is governed by the "Texas Engineering Practice Act". No warranty of any kind is made by TxDOT for any purpose whatsoever. TxDOT assumes no responsibility for the conversion of this standard to other formats or for incorrect results or damages resulting from its use.

DATE:
FILE:

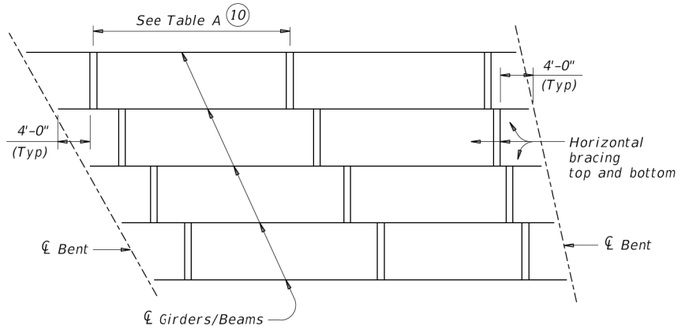

SLAB PLACEMENT BRACING

TABLE A

OPTION 1-RIGID BRACING (STEEL STRAP)

Girder or Beam Type	Maximum Bracing Spacing	
	Slab Overhang less than 4'-0" (11)	Slab Overhang 4'-0" and greater (11)
Tx28	¼ points	¼ points
Tx34	¼ points	¼ points
Tx40	¼ points	⅛ points
Tx46	¼ points	⅛ points
Tx54	¼ points	⅛ points
Tx62	¼ points	⅛ points
Tx70	¼ points	⅛ points
A	⅛ points	⅛ points
B	⅛ points	⅛ points
C	⅛ points	⅛ points
IV	¼ points	⅛ points
VI	¼ points	⅛ points

OPTION 2-FLEXIBLE BRACING (NO. 5 OVER PCP)

Girder or Beam Type	Maximum Bracing Spacing	
	Slab Overhang less than 4'-0" (11)	Slab Overhang 4'-0" and greater (11)
Tx28	¼ points	⅛ points
Tx34	¼ points	⅛ points
Tx40	¼ points	⅛ points
Tx46	¼ points	⅛ points
Tx54	¼ points	⅛ points
Tx62	¼ points	⅛ points
Tx70	¼ points	⅛ points
A	2.0 ft	1.5 ft
B	3.0 ft	2.0 ft
C	4.5 ft	2.0 ft
IV	¼ points	4.0 ft
VI	¼ points	4.0 ft

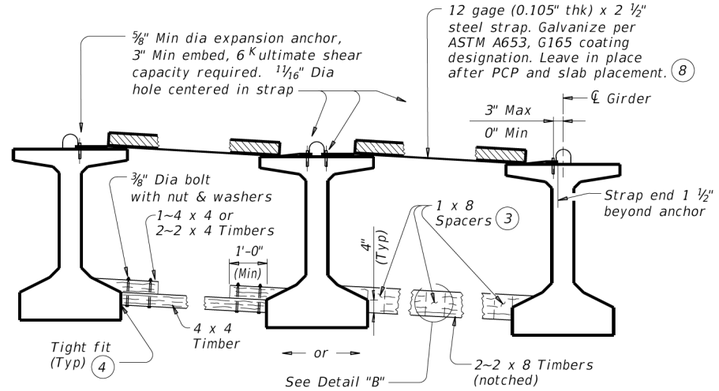

FOR SLAB PLACEMENT BRACING, OPTION 1 - RIGID

(Showing slab formed with PCP. This option is not allowed when slab is formed with PMDF or plywood.)

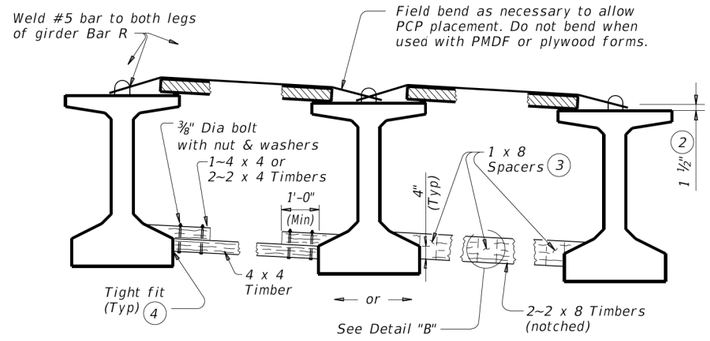

FOR SLAB PLACEMENT BRACING, OPTION 2 - FLEXIBLE

(Showing slab formed with PCP.)

HORIZONTAL BRACING DETAILS (5)

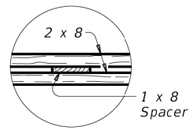

PLAN

DETAIL "B"

(2) Place and weld #5 bars as shown during erection. If forming deck with prestressed panels, bars can be temporarily removed, one at a time, during panel erection. Re-install bar prior to additional panel erection. Bars can rest on panels and be bent down and welded to girder Bars R.

(3) Clear distance between spacers must not exceed 3'. Nail together with 16d nails.

(4) Use wedges as necessary to obtain tight fit. Naii wedges to timbers.

(5) Pressure treated landscape timbers can not be used.

(8) Prior to installing, field bend strap to lay flush on both girders' top flange and slope between flange tips.

(10) Bracing spacing (¼ and ⅛ points) measured between first and last typical brace location.

(11) Measure slab overhang from centerline of girder or beam. When overhang varies in span, determine bracing spacing based on largest overhang.

SLAB PLACEMENT BRACING:

The details for slab placement bracing are considered minimum for fulfilling the requirements of Specification Items 422 and 425.

Required slab placement bracing must remain in place until slab concrete has attained a compressive strength of 3000 psi.

GENERAL NOTES:

Bracing details for spans longer than 150' are not provided. The Contractor must submit proposed bracing details for such conditions to the Engineer for approval prior to erection.

Systems equal to or better than those shown may be used provided details of such systems are submitted to and approved by the Engineer prior to erection.

Use of these systems or details does not relieve the Contractor of the responsibility for the adequacy of the bracing and the safety of the structure.

Removal of bracing for short periods of time to align girders and beams is permissible.

All turn-buckles, come-alongs, anchors and other connections must be capable of developing the full strength of the cable shown.

Furnish anchor bolts and nuts in accordance with Item 449, "Anchor Bolts".

Texas Department of Transportation

Bridge Division Standard

MINIMUM ERECTION AND BRACING REQUIREMENTS

PRESTRESSED CONCRETE I-GIRDERS AND I-BEAMS

MEBR(C)

FILE: mebcsts1-17.dgn	DN: TxDOT	CK: TxDOT	DW: TxDOT	CK: TxDOT
©TxDOT August 2017	CONT	SECT	JOB	HIGHWAY
REVISIONS				
	DIST	COUNTY		SHEET NO.
				325

DISCLAIMER:
The use of this standard is governed by the "Texas Engineering Practice Act". No warranty of any kind is made by TxDOT for any purpose whatsoever. TxDOT assumes no responsibility for the conversion of this standard to other formats or for incorrect results or damages resulting from its use.

DATE:
FILE:

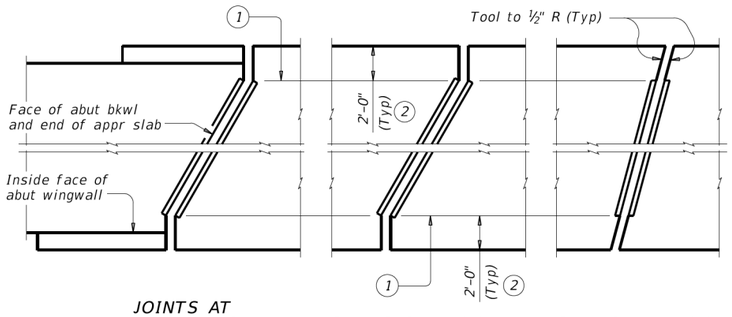

JOINTS AT ABUTMENTS | SKEWS OVER 15° | SKEWS THRU 15°

PLANS OF ARMOR PLATES

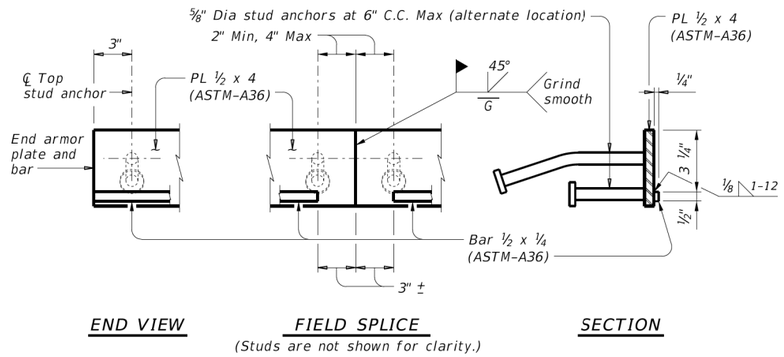

END VIEW | FIELD SPLICE | SECTION

(Studs are not shown for clarity.)

ELEVATION OF ARMOR PLATE

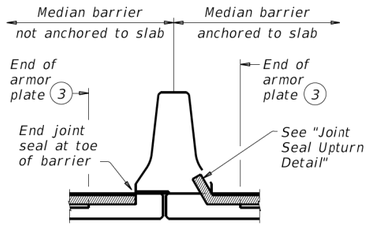

WITH OPEN DECK JOINT BELOW MEDIAN BARRIER

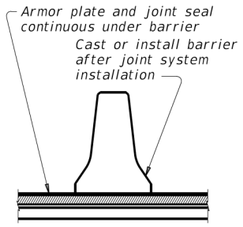

AT MEDIAN BARRIER

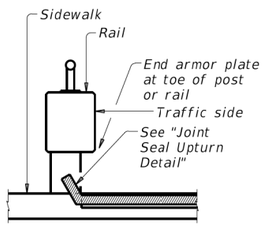

AT SIDEWALK BEHIND BRIDGE RAIL

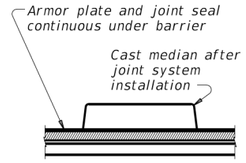

AT RAISED MEDIAN

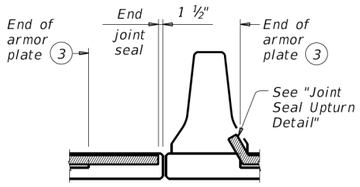

WITH OPEN DECK JOINT ADJACENT TO MEDIAN BARRIER

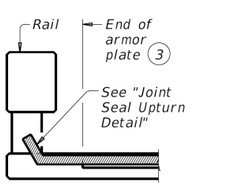

AT CONCRETE BRIDGE RAIL

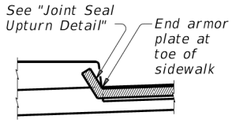

AT SIDEWALK

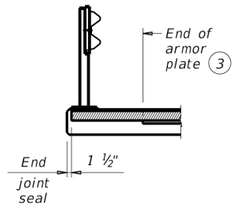

AT STEEL POST BRIDGE RAIL

TYPICAL SECTIONS OF ARMOR PLATES AND SEALS (4)

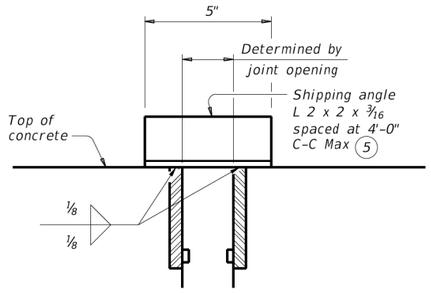

SHOWING ARMOR PLATE

(Studs not shown for clarity)

SHIPPING ANGLE

An alternate method of securing joint sections may be used if approved by the Bridge Division. Erection bolts are not allowed.

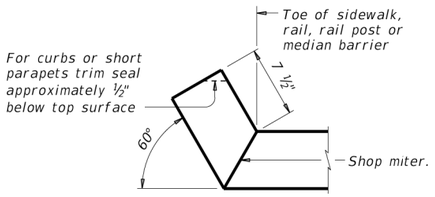

JOINT SEAL UPTURN DETAIL

Upturn seal only. Terminate armor plates as shown in "Plans of Armor Plates" and "Typical Sections of Armor Plates & Seals."

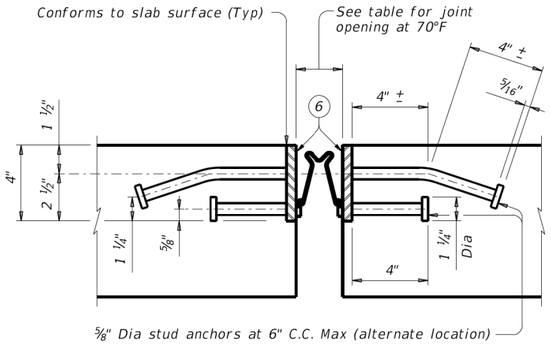

JOINT SECTION

Showing R J Watson strip seal. Other strip seals are similar.

(1) At Fabricator's option, armor plate may extend up to 6" beyond this point for skews through 15°.

(2) Unless shown otherwise, terminate armor plate at slab break point if break is more than 2'-0" from slab edge.

(3) See "Plans of Armor Plates".

(4) Other conditions affecting the joint profile should be noted elsewhere.

(5) Align shipping angle perpendicular to joint.

(6) Coat with Manufacturer's supplied epoxy primer above bar before installing sealant.

(7) Shape of steel section shown is typical. Variations in sections must be approved by the Engineer.

(8) These openings are also the recommended minimum installation openings.

TABLE OF SEALED EXPANSION JOINT INFORMATION

MANUFACTURER	STEEL SECTION (7)	STRIP SEAL 4" JOINT	
		Seal Type	Joint Opening (8)
D.S. Brown	As shown	V-400	2 ¼"
R.J. Watson	As shown	SF-400	2 ½"
SSI	As shown	SSS-400	2 ½"
Watson Bowman Acme	As shown	SPS-400	2"

REDUCED LONGITUDINAL MOVEMENT RANGE

SKEW (deg)	JOINT SIZE 4"
0	4.0"
15	4.0"
30	3.5"
45	2.8"

DESIGN NOTES:

Joints installed on a skew have reduced ability to accommodate longitudinal movement. Use table values to determine the correct joint size for skewed installations.

For other skews over 25 degrees, calculate reduced movement range by multiplying joint size by cosine (skew).

FABRICATION NOTES:

Temporarily shop assemble corresponding sections of sealed expansion joints (SEJ), check for fit, and match mark for shipment. Secure corresponding sections together for shipment with shipping angle. Do not use erection bolts.

The seal must be continuous and included in the price bid for sealed expansion joint.

Ship steel sections in convenient lengths of 10'-0" Min and 24'-0" Max unless necessary for staged construction or widenings. One shop splice is permitted in each shipping length provided no piece is less than 2'-0" long and sufficient studs are added to limit the stud to shop splice distance to 2" Min and 4" Max.

Weld studs in accordance with AWS D1.1.

Butt weld all shop and field splices and grind smooth areas in contact with seal. Make all necessary field splice joint preparations in the shop.

Paint the entire steel section with System II or IV primer in accordance with Item 446, "Feild Cleaning and Painting Steel." Provide paints in accordance with Item 446.2. Prepare steel and apply paint in accordance with Item 446.4.7.3 and 446.4.7.4.

Shop drawings for the fabrication of sealed expansion joints will not require the Engineer's approval if fabrication is in accordance with the details shown on this standard.

CONSTRUCTION NOTES:

Secure the sealed expansion joint in position and place to the proper grade and alignment by welding braces to adjacent reinforcing steel, to prestressed beam stirrups, or to anchors cast in concrete diaphragms. Include cost of temporary bracing in the price bid for sealed expansion joint.

Remove shipping angle immediately after each joint half is secured in place. Grind smooth, and touch up with organic zinc-rich paint.

Clean and prepare seal cavity for seal installation as per the Manufacturer's installation procedures.

Splice and install seal in accordance with the Manufacturer's directions and with the adhesive provided by the Manufacturer.

Splice in joint seal may be performed in the field.

GENERAL NOTES:

Provide sealed expansion joints in the size and at locations shown on the plans.

Minimum slab and overhang thickness required for the use of SEJ-B is 6 ½".

Texas Department of Transportation

Bridge Division Standard

SEALED EXPANSION JOINT TYPE B WITHOUT OVERLAY

SEJ-B

FILE: sejbste1-19.dgn	DN: TxDOT	CK: TxDOT	DW: JTR	CK: JMH
©TxDOT April 2019 REVISIONS	CONT	SECT	JOB	HIGHWAY
	DIST	COUNTY		SHEET NO. 326

DISCLAIMER:
The use of this standard is governed by the "Texas Engineering Practice Act". No warranty of any kind is made by TxDOT for any purpose whatsoever. TxDOT assumes no responsibility for the conversion of this standard to other formats or for incorrect results or damages resulting from its use.

DATE:
FILE:

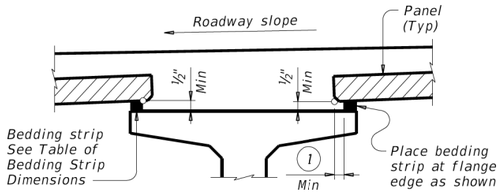

NORMAL GRADING DETAIL (3)

Showing prestressed concrete I-girders.
(Other beam types similar)

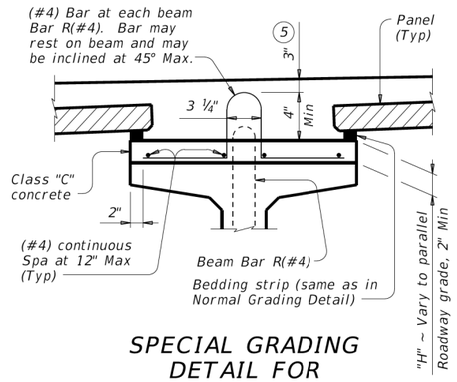

SPECIAL GRADING DETAIL FOR CONCRETE BEAMS

Showing prestressed concrete I-girders.
(Other beam types similar)

TABLE OF BEDDING STRIP DIMENSIONS		
WIDTH	HEIGHT (4)	
	Min	Max
1" (Min)	½"	2"
1 ¼"	½"	2 ½"
1 ½"	½"	3"
1 ¾"	½"	3 ½"
2"	½"	4"
2 ¼"	½"	4 ½" (2)
2 ½"	½"	5" (2)
2 ¾"	½"	5 ½" (2)
3" (Max)	½"	6" (2)

(1) 2" Min for I-giders, 1 ½" Min for all other beam types.

(2) Allowed for I-girders, not allowed on other beam types.

(3) To reduce the quantity of cast-in-place concrete, bedding strip thickness may be increased in ¼" increments. Bedding strips must be comprised of one layer. Bond bedding strips to the beams with an adhesive compatible with bedding strips. Bedding strips over 2.5" high may need to be bonded to panels. The same thickness strip must be used under any one panel edge and the maximum change in thickness between adjacent panels is ¼". Alternatively, bedding strips may be cut to grade. Panels may be supported by an alternate method, using a commercial product, if approved by the Engineer of Bridge Design, Bridge Division. If bedding strips exceed 6" high for I-Girders, 4" high for all other beam types, use Special Grading Detail for Concrete Beams or submit an alternate method to the Bridge Division for approval.

(4) Height must not exceed twice the width.

(5) Provide clear cover as indicated unless otherwise shown on Span Details.

(6) See Span Details and Thickened Slab End Details for top slab reinforcement and clear cover. Transverse top slab reinforcement may rest on top of prestressed concrete panels if necessary to maintain clear cover.

(7) Space Bars UP(#4) with Beam Bars R(#4) in all areas where measured haunch exceeds 3 ½" with I-girders, and 3" for all other beam types. Epoxy coating for Bars UP is not required.

(8) Do not locate construction joints on top of a panel.

(9) Butt adjacent bedding strips together with adhesive. Cut v-notches, approx ¼" deep, in the top of the bedding strips at 8' o.c..

CONSTRUCTION NOTES:

Erected panels must bear uniformly on bedding strips of extruded polystyrene placed along top flange edges.

Placing panels to minimize joint openings is recommended.

If additional blocking is needed, special grading details for supporting the panels and extra reinforcing between beam and slab will be considered subsidiary to deck construction.

Bars U, shown on PCP-FAB, may be bent over or cut off if necessary.

Care must be taken to ensure proper cleaning of construction debris and consolidation of concrete material under the edges of the panels. Bedding strips must be placed at beam flange edges so that adequate space is provided for the mortar to flow a minimum of 1 ½" under the panels as the slab concrete is placed.

To allow the proper amount of mortar to flow between beam and panel, the minimum vertical opening must be at least ½". Roadway cross-slope reduces the opening available for entry of the mortar. Bedding strips varying in thickness across the beam are therefore required.

For clear span between U-beams less than or equal to 18", see Permissible Slab Forming Detail on Miscellaneous Slab Detail sheets, UBMS.

MATERIAL NOTES:

Provide Grade 60 reinforcing steel in the cast-in-place slab. See Table of Reinforcing Steel for size and spacing of reinforcement.

If the top and bottom layer of reinforcing steel is shown on the Span Details to be epoxy coated, then the D, E, P, & Z bars must be epoxy coated.

Provide bar Laps, where required, as follows:

Uncoated ~ #4 = 1'-7"
Epoxy Coated ~ #4 = 2'-5"

GENERAL NOTES:

Designed according to AASHTO LRFD Bridge Design Specifications.

Panel placement may follow either Option 1 or Option 2 except Option 1 must be used if the skew exceeds 45 degrees.

Use of Prestressed Concrete Panels is not permitted for horizontally curved steel plate or tub girders. See Span Details for other possible restrictions on their use.

These details are to be used in conjunction with the Span Details, PCP-FAB and other applicable standard drawings.

When panel support (bedding strips) deviates from what is shown herein, provide details signed and sealed by a professional Engineer.

Any additional reinforcement or concrete required on this standard is considered subsidiary to the bid Item "Reinforced Concrete Slab".

Cover dimensions are clear dimensions, unless noted otherwise.

Reinforcing bar dimensions shown are out-to-out of bar.

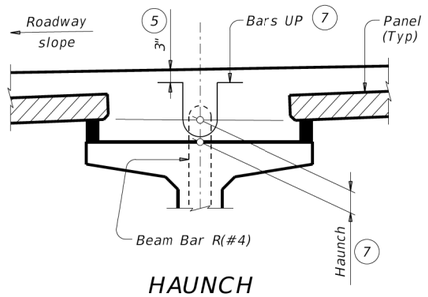

HAUNCH REINFORCING DETAIL

Showing prestressed concrete I-girders.
(Other beam types similar)

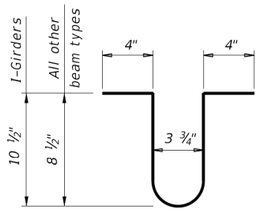

BARS UP (#4) (7)

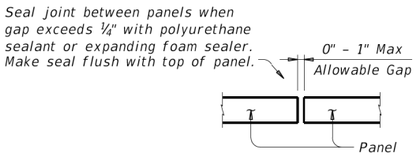

PANEL JOINTS

(Panel reinforcing not shown for clarity.
The gap cannot be considered as a panel fabrication tolerance. Adjust panel placement to minimize joint openings.)

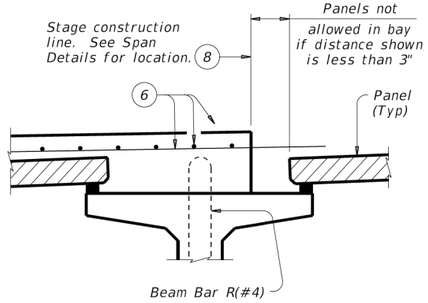

PRESTR CONC I-GIRDERS

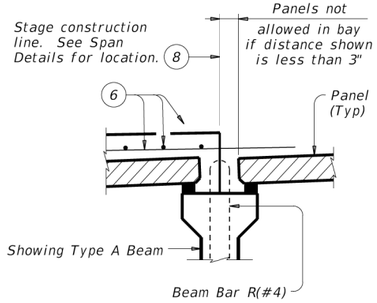

PRESTR CONC I-BEAMS

STAGE CONSTRUCTION LIMITATIONS

(Other beam types similar)

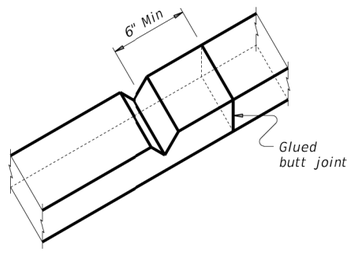

BEDDING STRIP DETAIL (9)

HL93 LOADING

SHEET 1 OF 4

Texas Department of Transportation

Bridge Division Standard

PRESTRESSED CONCRETE PANELS DECK DETAILS

PCP

FILE: pcpstde1-19.dgn	DN: TxDOT	CK: TxDOT	DW: JTR	CK: JMH
©TxDOT April 2019	CONT	SECT	JOB	HIGHWAY
REVISIONS				
	DIST	COUNTY		SHEET NO.
				327

DISCLAIMER:
The use of this standard is governed by the "Texas Engineering Practice Act". No warranty of any kind is made by TxDOT for any purpose whatsoever. TxDOT assumes no responsibility for the conversion of this standard to other formats or for incorrect results or damages resulting from its use.

DATE:
FILE:

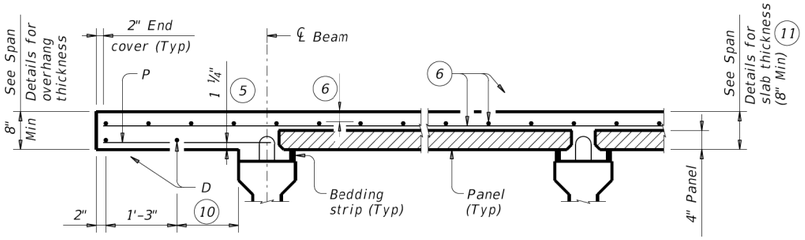

PRESTRESSED CONCRETE I-BEAMS

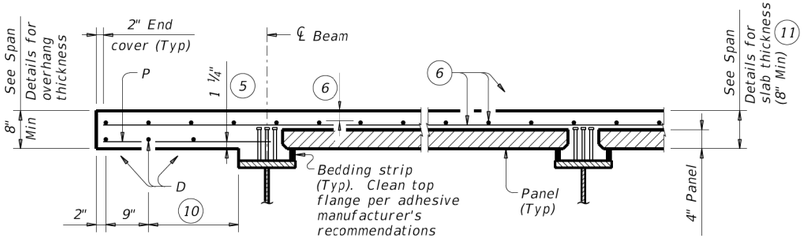

STEEL BEAMS

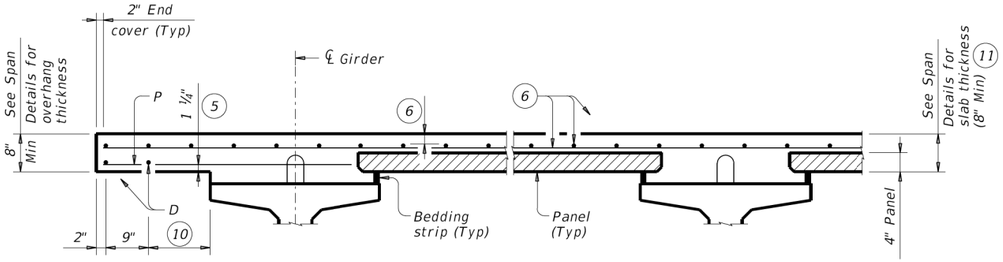

PRESTRESSED CONCRETE I-GIRDERS

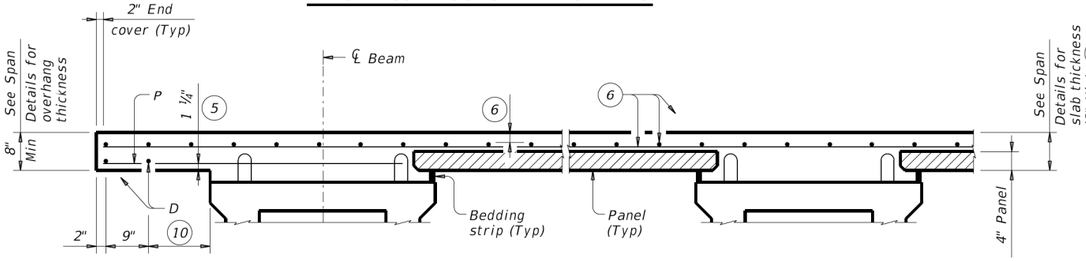

PRESTRESSED CONCRETE X-BEAMS

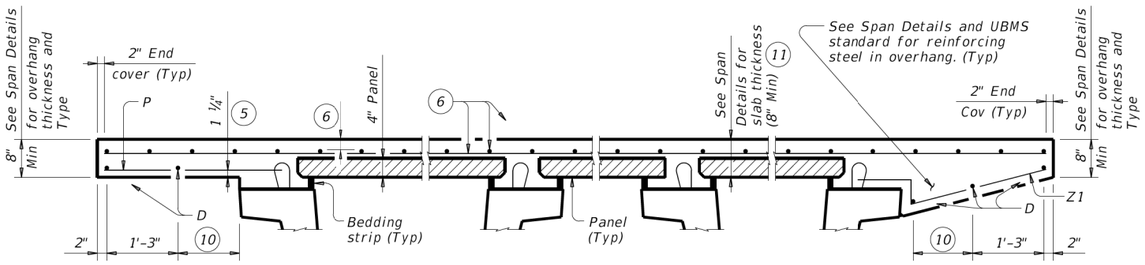

NORMAL OVERHANG WITH PRESTR CONC U-BEAMS

SLOPED OVERHANG WITH PRESTR CONC U-BEAMS

TYPICAL PART TRANSVERSE SECTIONS

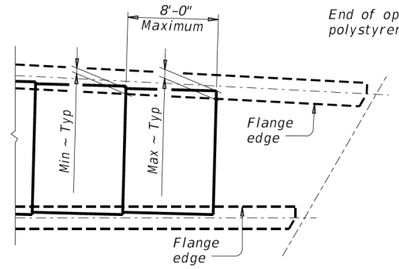

AT FLARED BEAMS OR GIRDERS

See PCP-FAB standard for Min and Max dimensions based on bemm/girder type.

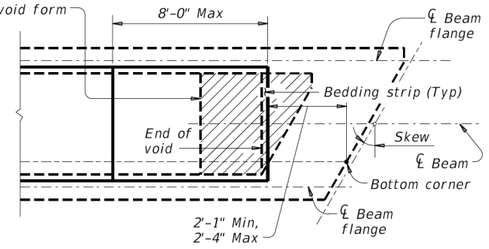

OVER CONC U-BEAMS

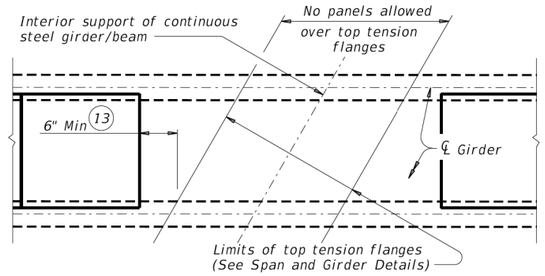

AT INT SUPPORTS OF CONTINUOUS STEEL GIRDERS

PART PLANS OF PANEL PLACEMENT

(5) Provide clear cover as indicated unless otherwise shown on Span Details.

(6) See Span Details and Thickened Slab End Details for top slab reinforcement and clear cover. Transverse top slab reinforcement may rest on top of prestressed concrete panels if necessary to maintain clear cover.

(9) Butt adjacent bedding strips together with adhesive. Cut v-notches, approx ¼" deep, in the top of the bedding strips at 8' o.c..

(10) Equally space additional bar if more than 1'-3" Max.

(11) The actual thickness constructed may exceed the slab thickness shown on the Span Details but the extra thickness may be no more than 2" (1" for prestressed concrete U-beams and steel beams). Bearing seat elevations or finished grade may be adjusted.

(12) Field adjust Bars Z1(#4) to match actual slope of slab overhangs. Width of slab overhang will vary along span with curved slab edges. Adjust Bar Z1(#4) dimensions to maintain proper cover. Bars Z2(#4) are located at Inverted-Tee stems only.

(13) Location of concrete placement sequence boundaries and bolted field splices should be considered by the contractor in determining panel limits.

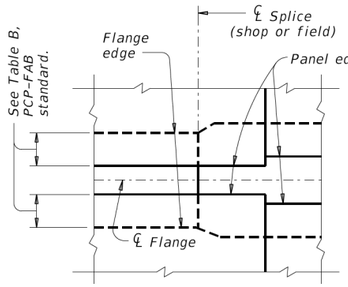

PLAN AT SPLICE

(Showing steel beams with flange width transition)

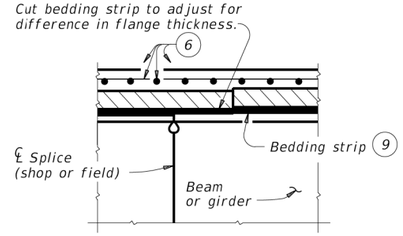

ELEVATION AT SPLICE

(Showing steel beams with different flange thickness)

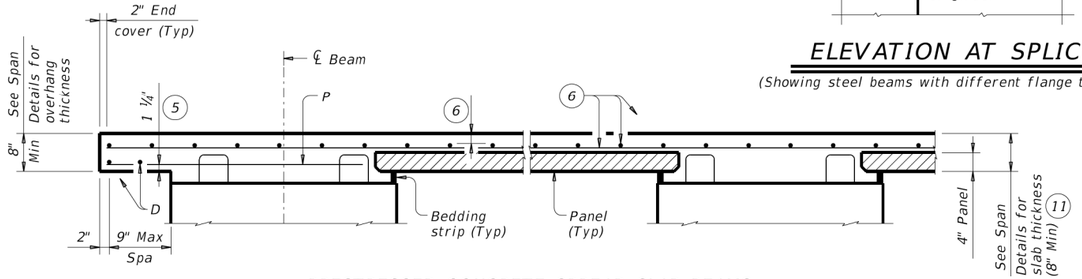

PRESTRESSED CONCRETE SPREAD SLAB BEAMS

Bars P over exterior beams are still required when no overhang is used. In this case, only one Bar D, 2" from slab edge, is required.

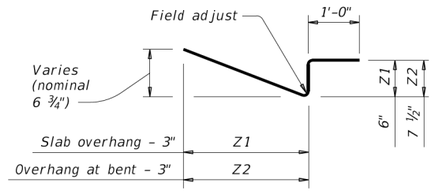

BARS Z (#4) (12)

HL93 LOADING

SHEET 2 OF 4

Texas Department of Transportation

Bridge Division Standard

PRESTRESSED CONCRETE PANELS DECK DETAILS

PCP

FILE: pcpstde1-19.dgn	DN: TxDOT	CK: TxDOT	DW: JTR	CK: JMH
©TxDOT April 2019	CONT	SECT	JOB	HIGHWAY
REVISIONS				
	DIST	COUNTY		SHEET NO.
				328

DISCLAIMER:
The use of this standard is governed by the "Texas Engineering Practice Act". No warranty of any kind is made by TxDOT for any purpose whatsoever. TxDOT assumes no responsibility for the conversion of this standard to other formats or for incorrect results or damages resulting from its use.

DATE:
FILE:

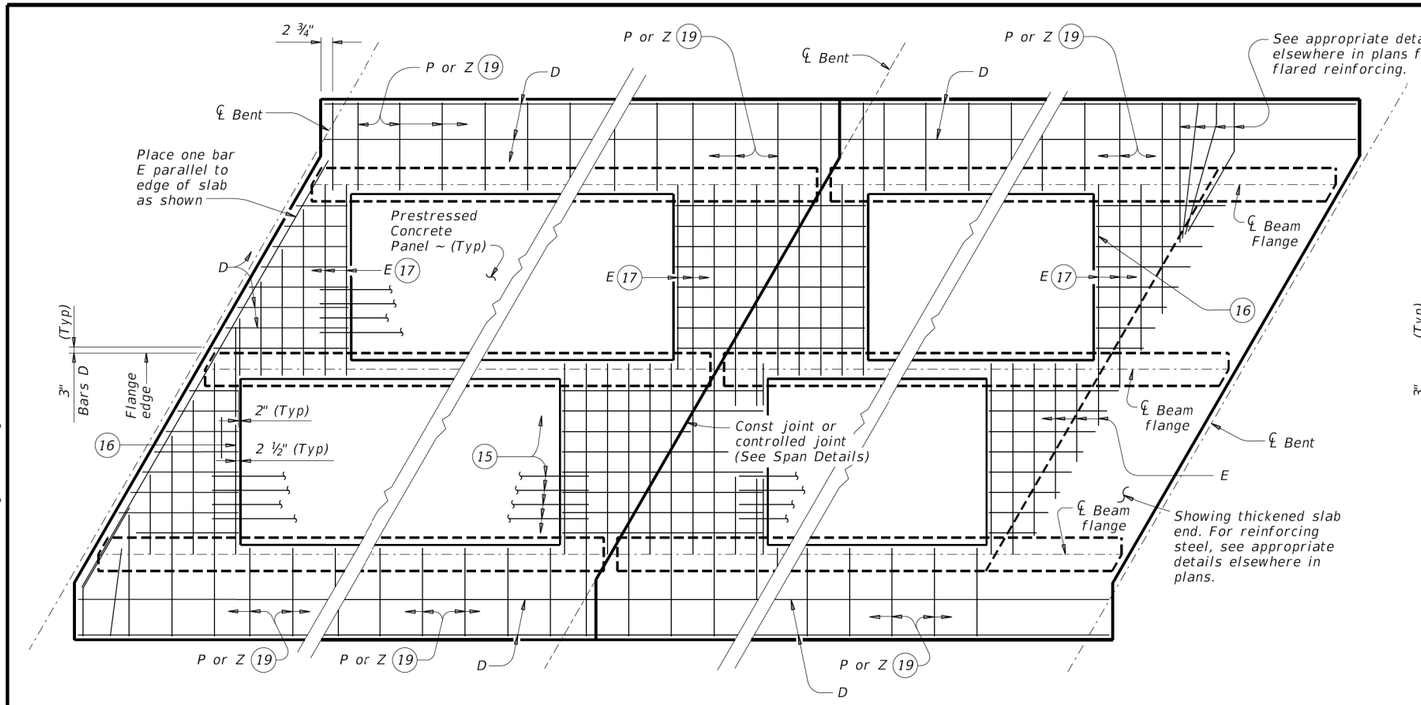

AT ALL SPAN ENDS UNLESS NOTED OTHERWISE | AT INTERIOR BENTS | AT THICKENED END SLABS

OPTION 1 ~ PLAN OF SLABS WITH NORMAL REINFORCEMENT

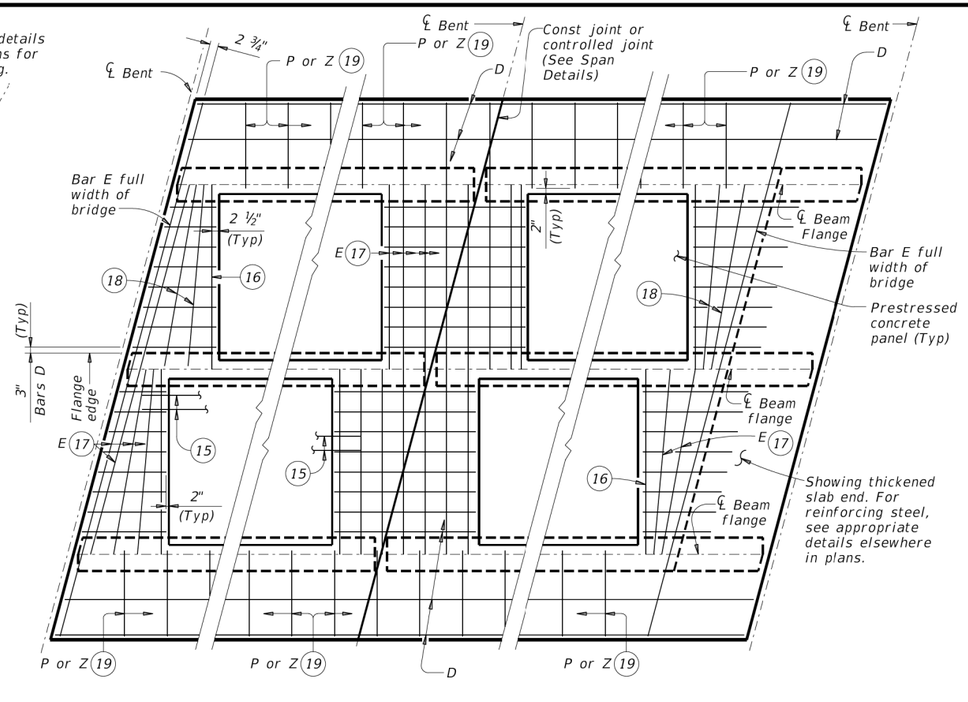

AT ALL SPAN ENDS UNLESS NOTED OTHERWISE | AT INTERIOR BENTS | AT THICKENED END SLABS

OPTION 1 ~ PLAN OF SLABS WITH SKEWED REINFORCEMENT

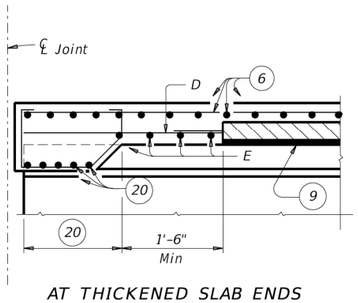

AT THICKENED SLAB ENDS FOR PRESTR CONC U-BMS

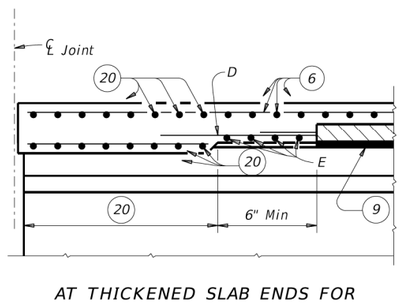

AT THICKENED SLAB ENDS FOR PRESTR CONC I-BMS AND STEEL BMS

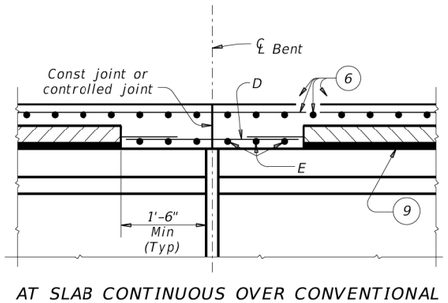

AT SLAB CONTINUOUS OVER CONVENTIONAL INTERIOR BENTS FOR ALL SIMPLE SPAN BMS

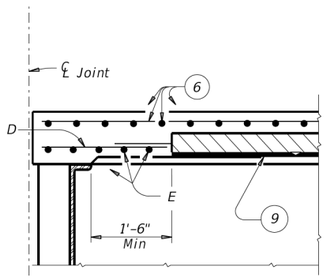

AT CONVENTIONAL END DIAPHRAGMS FOR STEEL BMS

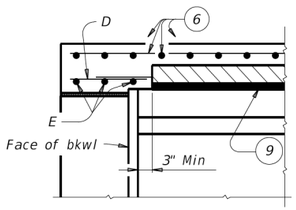

AT SLAB OVER ABUTMENT BACKWALL FOR ALL BMS

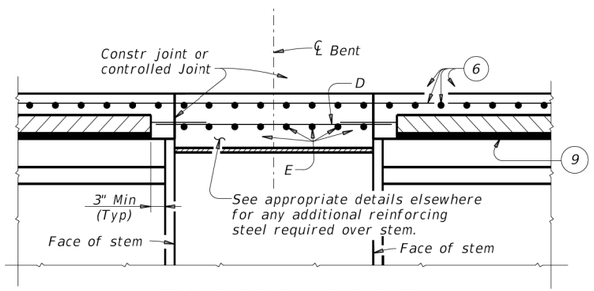

AT SLAB CONTINUOUS OVER INVERTED-T BENTS FOR ALL BMS

OPTION 1 ~ ELEVATIONS AT BEAM ENDS

(6) See Span Details and Thickened Slab End Details for top slab reinforcement and clear cover. Transverse top slab reinforcement may rest on top of prestressed concrete panels if necessary to maintain clear cover.

(9) Butt adjacent bedding strips together with adhesive. Cut v-notches, approx ¼" deep, in the top of the bedding strips at 8' o.c.

(14) Max Spacing as listed unless otherwise shown.

(15) At connection with cast-in-place slab, extend longitudinal panel reinforcement. See PCP-FAB for details.

(16) Maintain one Bar E(#4) parallel to panel ends (Typ).

(17) Bars E(#4) not continuous over beam flanges must overlap beam flange 6" Min.

(18) Add flared Bars E(#4) (Min Spa = 6", Max Spa = 12") as required at panel ends.

(19) Where possible, Bars E(#4) may be extended into overhangs to replace Bars P(#4). Bars Z(#4) are required for sloped overhangs with U-Beams.

(20) See appropriate thickened slab end details for reinforcing and limits of thickened slab end.

TABLE OF REINFORCING STEEL (14)

BAR	SIZE	Max Spa (in.)
D	#4	9
E	#4	9
P	#4	18
UP	#4	~
Z	#4	18

HL93 LOADING

Texas Department of Transportation

Bridge Division Standard

PRESTRESSED CONCRETE PANELS
DECK DETAILS

PCP

FILE: pcpstde1-19.dgn	DN: TxDOT	CK: TxDOT	DW: JTR	CK: JMH
©TxDOT April 2019 REVISIONS	CONT	SECT	JOB	HIGHWAY
	DIST	COUNTY		SHEET NO.
				329

DISCLAIMER:
The use of this standard is governed by the "Texas Engineering Practice Act". No warranty of any kind is made by TxDOT for any purpose whatsoever. TxDOT assumes no responsibility for the conversion of this standard to other formats or for incorrect results or damages resulting from its use.

DATE:
FILE:

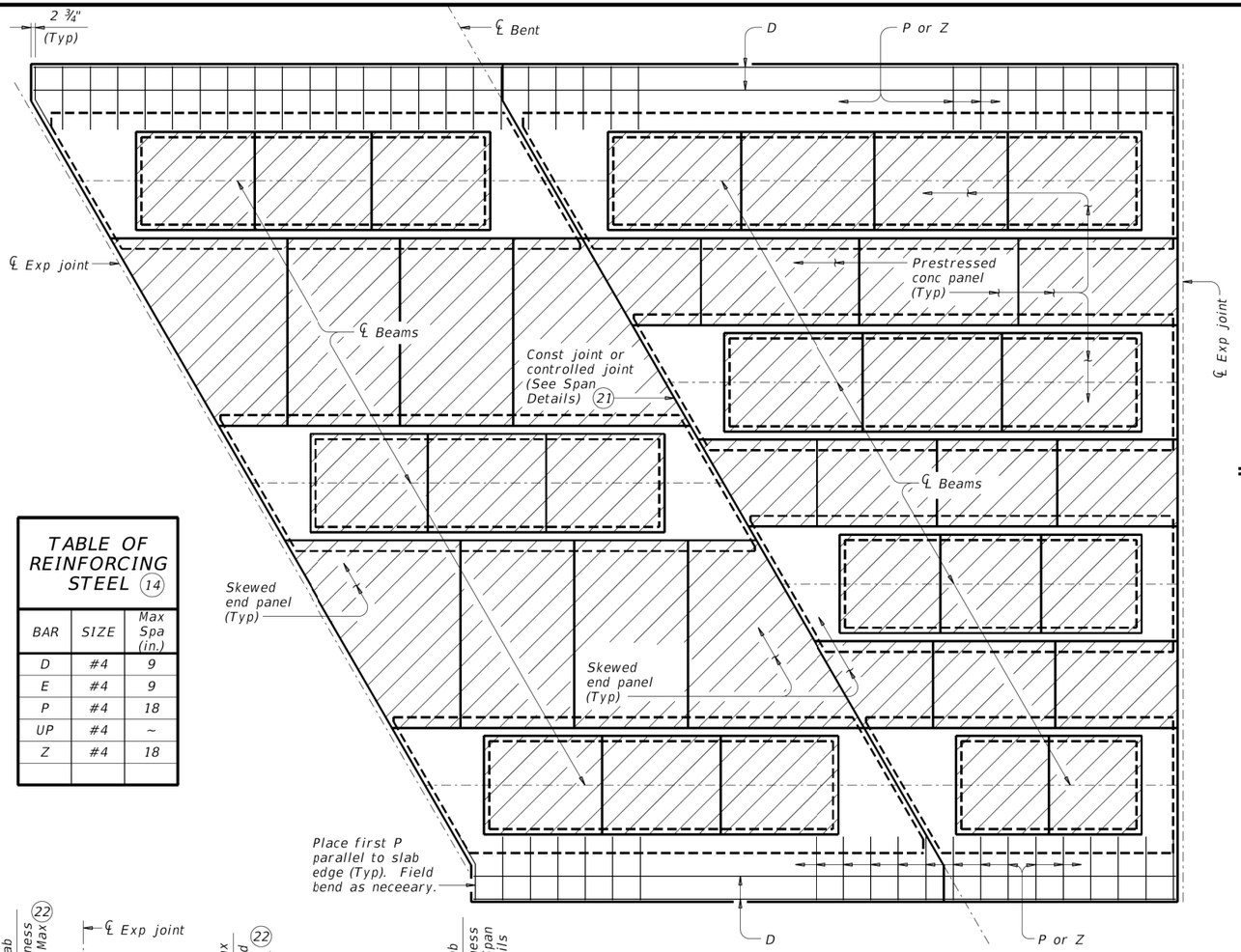

OPTION 2 ~ PLAN OF SLAB

(Showing U-Beams; other beams similar)

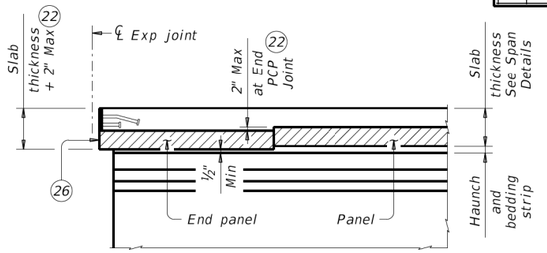

JOINTS (BETWEEN BEAMS/GIRDERS OR AT INV-T STEM)

For SEJ-A, SEJ-S(0), AJ, and Type A expansion joints only.

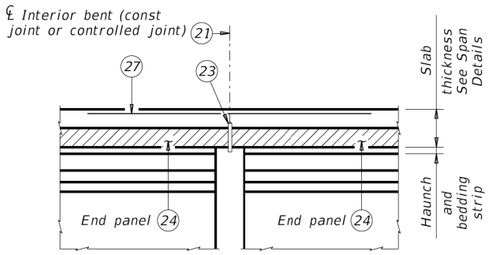

CONVENTIONAL INTERIOR BENT

Panel against panel between beams/girders.

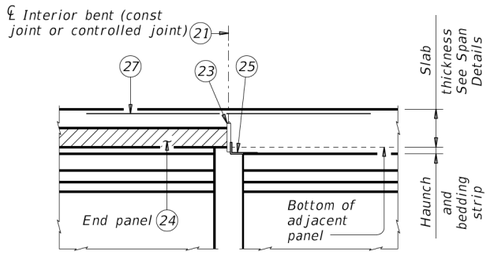

CONVENTIONAL INTERIOR BENT

Panel against beam/girder end in adacent span.

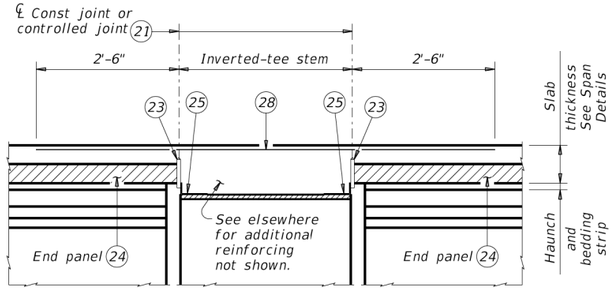

INVERTED-T BENT

Panels against inverted-tee stem

OPTION 2 ~ ELEVATIONS AT BEAM ENDS (6)

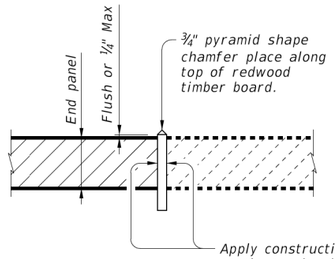

ELEVATION EXAMPLE OF END PANEL AND TIMBER BOARD (23)

See "Option 2 ~ Elevation At Beam Ends".

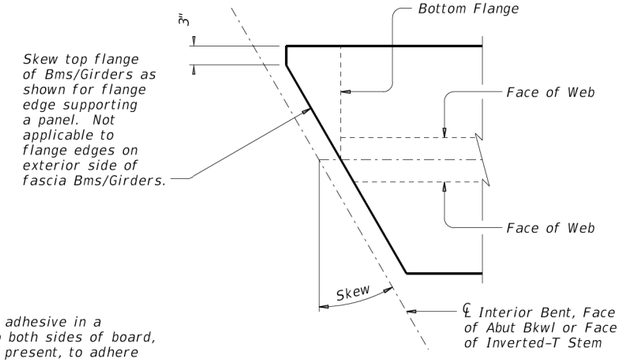

OPTION 2 ~ SHOWING MODIFICATION TO BEAM/GIRDER TOP FLANGE FOR SKEWS OVER 5°

Showing I-Bm/I-Girder, U-Bms and Steel Bms similar.

TABLE OF REINFORCING STEEL (14)		
BAR	SIZE	Max Spa (in.)
D	#4	9
E	#4	9
P	#4	18
UP	#4	~
Z	#4	18

(6) See Span Details and Thickened Slab End Details for top slab reinforcement and clear cover. Transverse top slab reinforcement may rest on top of prestressed concrete panels if necessary to maintain clear cover.

(14) Max Spacing as listed unless otherwise shown.

(21) 1 ½" Vinyl or plastic joint former at controlled joints (Stress Cap, Zip Strip, Stress Lock, or equal as approved by the Engineer.)

(22) End panel may be set up to 2" lower to accommodate expansion joint hardware, provided bedding strip is not less than ½" thick.

(23) ¾" thick redwood timber board, leave in place. Redwood timber board placed flush with top of panel or within ¼" Max above panel. Place ¾" pyramid shape chamfer along top of timber board. See "Elevation Example of End Panel and Timber Board". Place straight, within ¼" of centerline of bent or face of inverted-tee, across bridge width and end board at exterior flange edge of fascia beams/girders. Do not extend into overhang.

(24) Place panel within ½" of ¾" thick board.

(25) Permanent galvanized steel sheet form. Removable formwork is acceptable.

(26) Place end panel within ½" of expansion joint opening. End panel cannot encroach on required expansion joint opening.

(27) Place additional (#4) bar 5'-0" in length between every slab bars T. Center (#4) bar on Joint.

(28) Place additional (#4) bar continuous 2'-6" beyond each side of Inverted-T Stem between every slab bars T.

SPECIAL OPTION 2 CONSTRUCTION NOTES:

When Option 2 is chosen bottom mat of thickened end slab reinforcing is not required. Use the same top mat as shown on the Thickened Slab End Details sheet.

Placing panels adjacent to expansion joints and bent centerlines prior to completing interior panel placement is recommended. Saw cutting panels to fit is acceptable when approved by the Engineer. Minimum distance from a saw cut edge to a panel strand is 1 ½".

Do not extend the longitudinal panel reinforcement into the cast-in-place slab.

Top flanges of beams and girders on skewed bridges must be modified as shown on this drawing. The Contractor is responsible for coordinating this modification with the beam fabricator prior to submitting shop drawings for approval.

Fabricator may optionally skew the whole end. When electing to skew whole end, girder end details and bearing type at conventional interior bent must be changed to use condition at abutment. Fabricator must coordinate change in bearing type, bearing centerline location, and dowel location with Engineer and Contractor. Show appropriate changes on girder and bearing shop drawings.

Bending of anchor studs of expansion joints shown on standards AJ, SEJ-A and SEJ-S(0) is permissible if necessary to clear top of end panels. The Contractor is responsible for coordinating modifications with the joint fabricator. Submit shop drawings for approval when modifications to expansion joint hardware are made.

Bedding strips under skewed end panels must conform to the requirements of Item 422 except their minimum compressive strength must be 60 psi.

Provide Bars AA, G, K and OA from standard IGTS in the slab.

HL93 LOADING SHEET 4 OF 4

Texas Department of Transportation

Bridge Division Standard

PRESTRESSED CONCRETE PANELS
DECK DETAILS

PCP

FILE: pcpstde1-19.dgn	DN: TxDOT	CK: TxDOT	DW: JTR	CK: JMH
©TxDOT April 2019	CONT	SECT	JOB	HIGHWAY
REVISIONS				
	DIST	COUNTY		SHEET NO.
				330

DISCLAIMER:
The use of this standard is governed by the "Texas Engineering Practice Act". No warranty of any kind is made by TxDOT for any purpose whatsoever. TxDOT assumes no responsibility for the conversion of this standard to other formats or for incorrect results or damages resulting from its use.

DATE:
FILE:

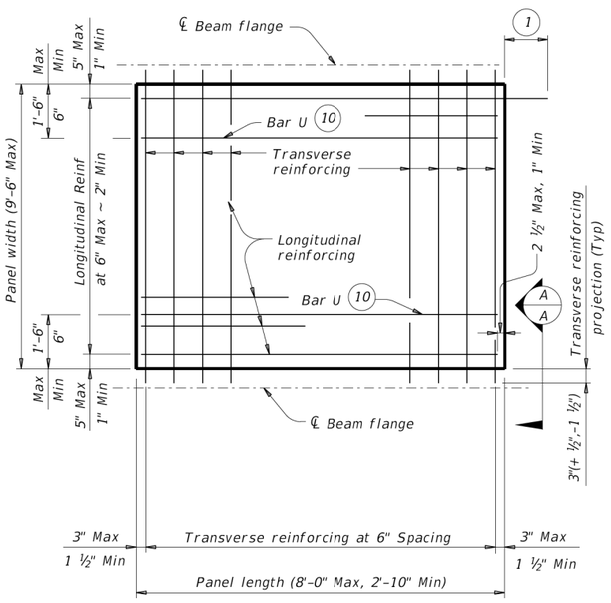

TYPICAL NON-SKEWED PANEL PLAN

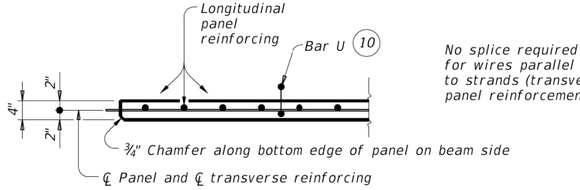

SECTION A-A

(Not showing supplemental #4 bars for skewed end panels.)

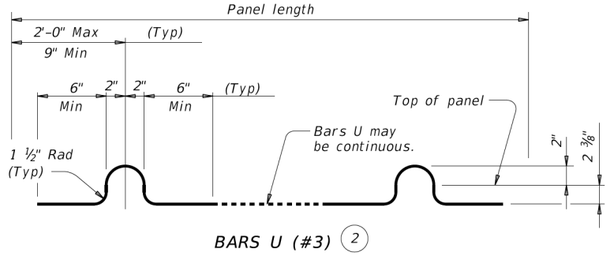

BARS U (#3) 2

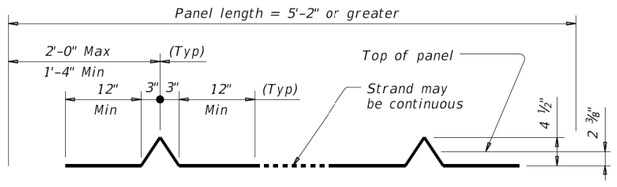

OPTIONAL STRAND FOR BARS U 3

1. At connection with cast-in-place slab, extend longitudinal panel reinforcement 1'-0" (+2",-0") past panel end. Alternatively, provide (#3) x 2'-0" dowels at 6" Max Spacing and extend dowels 1'-0" past panel end.
2. Four loops required per panel.
3. Four loops required per panel. ⅜" or ½" strands may be used.
4. Normal dimensions must be used on spans with parallel beams. Maximum and Minimum dimensions apply only to spans with flared beams.
5. See Normal Grading Detail on PCP standard for lap requirements and bedding strip dimensions. Some laps shown in tables cannot utilize all bedding strip widths.
6. One Splice allowed per panel. No more than two sheets of WWR are allowed.
7. Provide (#4) bars under transverse reinforcing, 10 Spaces at 4" = 3'-4". Omit for 5 degree (1:12) skew and smaller.
8. End Cover 2 ½" Max, 1" Min.
9. Recess strands on indicated panel edge in accordance with Item 424.
10. At the fabricator's option, Bars U may be placed parallel to transverse panel reinforcing with horizontal legs in plane of transverse panel reinforcing.
11. Use length of indicated panel edge as panel width for purpose of determining type of transverse reinforcing.
12. Timber form work permissible this edge.

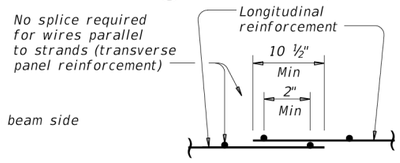

WELDED WIRE REINFORCEMENT (WWR) SPLICE DETAIL 6

Debond all strands less than 3.5' long between panel edges. For strands greater than 3.5' long, the Fabricator has the option to debond 2 or fewer strands from corner. For each debonded strand add a #4 bar.

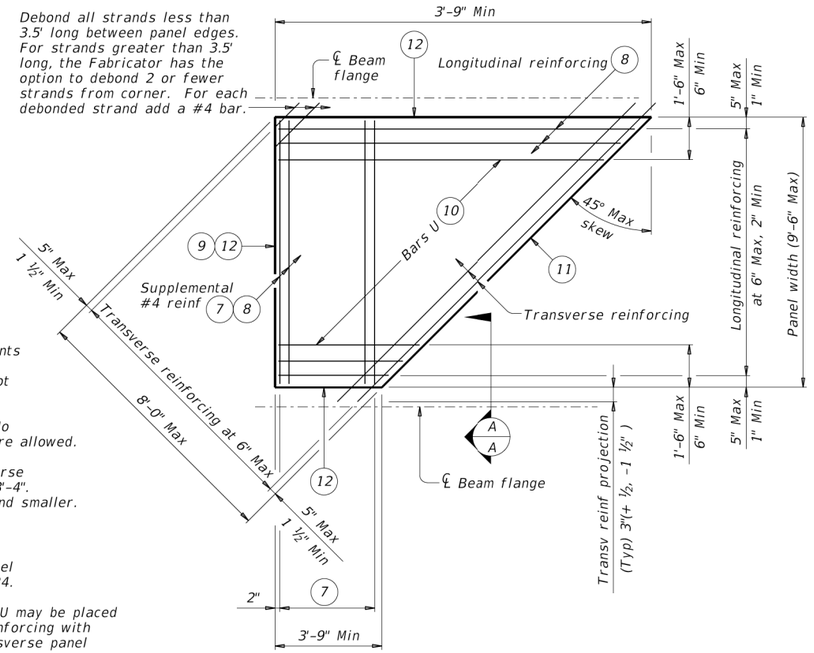

TYPICAL SKEWED END PANEL PLAN

(Only to be used with details shown elsewhere in the plans.)

TABLE A (4) (5)

Beam Type	Normal (In.)	Min (In.)	Max (In.)
A	3	2 ½	3 ½
B	3	2 ½	3 ½
C	4	3	4 ½
IV	6	4	7 ½
VI	6 ½	4 ½"	8 ½
U40 – 54	5 ½	5 ½	7
Tx28-70	6	5	7 ½
XB20 – 40	4	3	4 ½
XSB12 – 15	4	3	4 ½

TABLE B (4) (5)

Top Flange Width	Normal (In.)	Min (In.)	Max (In.)
11" to 12"	2 ¾	2 ½	2 ¾
Over 12" to 15"	3 ¼	3	3 ¼
Over 15" to 18"	4	3	4 ¾
Over 18"	5	3 ½	6 ¼

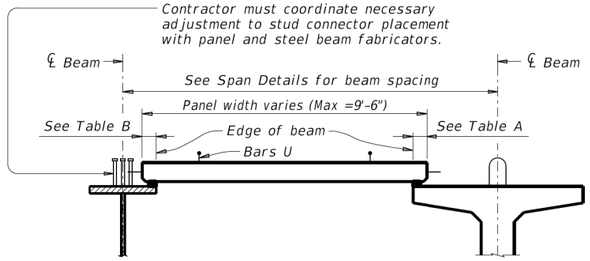

STEEL BEAMS

PRESTRESSED CONCRETE BEAMS OR GIRDERS

Typ unless noted otherwise

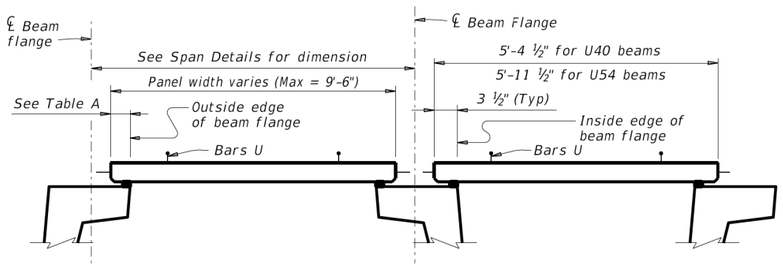

PRESTRESSED CONCRETE U-BEAMS

TYPICAL SECTIONS FOR DETERMINING PANEL WIDTH

GENERAL NOTES:

Provide Class H concrete for panels. Release strength f'ci=3,500 psi. Minimum 28 day strength f'c=5,000 psi.

Provide ¾" chamfer along bottom edge of panel on beam side.

Do not use epoxy-coated reinforcing steel bar or strand in panels.

Remove laitance from top panel surface.

Finish top of panel to a roughness between a No. 6 and No. 9 concrete surface profile, inclusive, as specified by the International Concrete Repair Institute (ICRI).

Shop drawings for the fabrication of panels will not require the Engineer's approval if fabrication is in accordance with the details shown on this standard.

A panel layout which identifies location of each panel must be developed by the Fabricator. Permanently mark each panel in accordance with the panel layout. A copy of the layout is to be provided to the Engineer.

TRANSVERSE PANEL REINFORCEMENT:

For panel widths over 5', use ⅜" or ½" Dia (270k) prestressing strands with a tension of 14.4 kips per strand.

For panel widths over 3'-6" up to and including 5', use ⅜" or ½" Dia (270k) prestressing strands with a tension of 14.4 kip per strand. Optionally, (#4) Grade 60 reinforcing bars may be used in lieu of prestressed strands.

For panel widths up to 3'-6", use (#4) Grade 60 reinforcing bars (prestressed strands alone are not allowed).

Place transverse panel reinforcement at panel centroid and space at 6" Max.

LONGITUDINAL PANEL REINFORCEMENT:

Any of the following options may be used for longitudinal panel reinforcement:

1. (#3) Grade 60 reinforcing steel at 6" Max Spacing. No splices allowed.
2. ⅜" Dia prestressing strands at 4 ½" Max Spacing (unstressed). No splices allowed.
3. ½" Dia prestressing strands at 6" Max Spacing (unstressed). No splices allowed.
4. Deformed Welded Wire Reinforcement (WWR) (ASTM A1064) providing 0.22 sq in per foot of panel width. Wires larger than D11 not permitted. Provide transverse wires to ensure proper handling of reinforcing. One splice per panel is allowed. See WWR Splice Detail.

No combination of longitudinal reinforcement options in a panel is allowed.

Place longitudinal panel reinforcement above or below transverse panel reinforcement. Must be placed above transverse panel reinforcement for skewed end panels with supplemental (#4) reinforcement.

HL93 LOADING

Texas Department of Transportation

Bridge Division Standard

PRESTRESSED CONCRETE PANEL FABRICATION DETAILS

PCP-FAB

FILE: pcpstde2-19.dgn	DN: TxDOT	CK: TxDOT	DW: JTR	CK: AES
©TxDOT April 2019	CONT	SECT	JOB	HIGHWAY
REVISIONS				
	DIST	COUNTY		SHEET NO.
				331

DISCLAIMER:
The use of this standard is governed by the "Texas Engineering Practice Act". No warranty of any kind is made by TxDOT for any purpose whatsoever. TxDOT assumes no responsibility for the conversion of this standard to other formats or for incorrect results or damages resulting from its use.

DATE:
FILE:

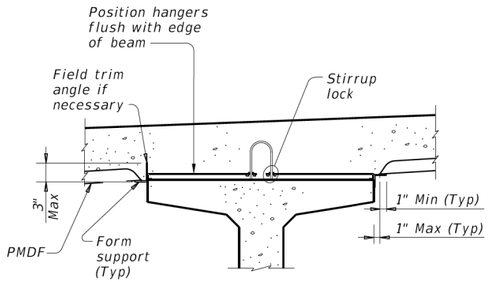

PRESTR CONC I-BEAMS AND I-GIRDERS WITH STIRRUP LOCKS

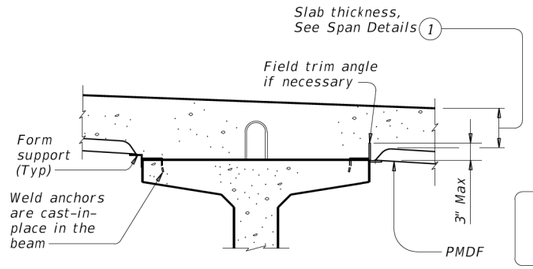

PRESTR CONC I-BEAMS AND I-GIRDERS WITH WELD ANCHORS

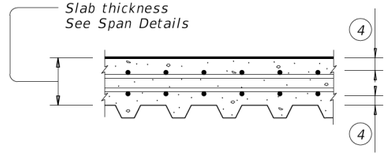

TYP LONGITUDINAL SLAB SECTION

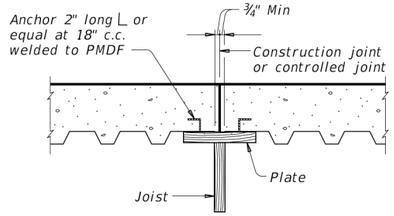

Note: In spans where PMD forms are used, timber forms must be used at construction joints. Adequate provision must be made to support edge of metal form and to provide anchorage of metal form to slab concrete where joined to wood forms.

SECTION THRU CONSTRUCTION JOINT

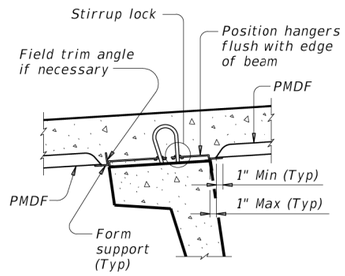

U-BEAMS WITH STIRRUP LOCKS

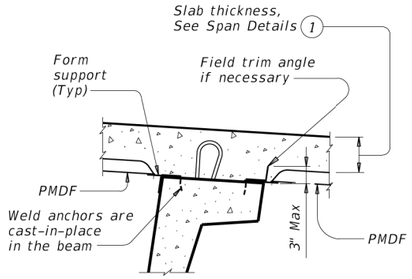

U-BEAMS WITH WELD ANCHORS

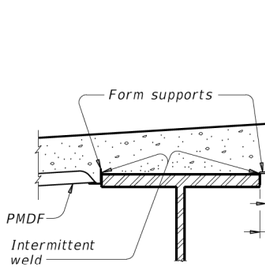

STEEL BEAMS AT COMPRESSION FLANGES

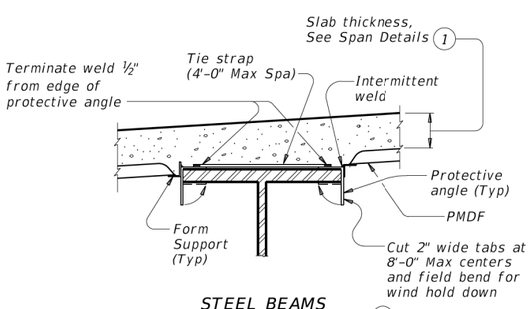

STEEL BEAMS AT TENSION FLANGES (2)

TYPICAL TRANSVERSE SECTIONS

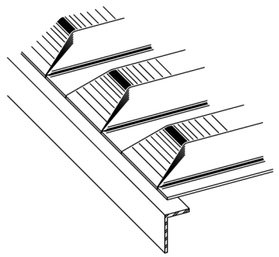

PRECLOSED

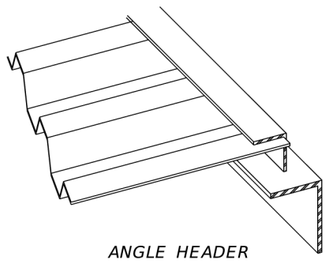

ANGLE HEADER

NOTE: This type is to be used for skewed ends only.

TYPES OF END CLOSURES

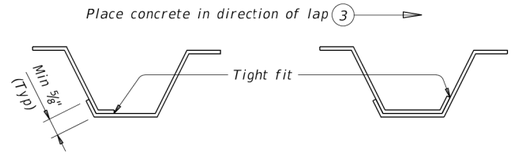

SIDE LAP DETAILS

(1) Slab thickness minus 5/8" if corrugations match reinforcing bars.

(2) Welding of form supports to tension flanges will not be permitted. Other methods of providing wind hold down resistance for PMDF in tension flange zones will be considered. At least one layer of sheet metal must be provided between the flange and the weld joint.

(3) The direction of concrete placement will be such that the upper layer of the form overlap is loaded first.

(4) See Span details for cover requirements.

GENERAL NOTES:

Steel for Permanent Metal Deck Forms (PMDF) and support angles shall conform to ASTM A653, structural steel (SS), with coating designation G165. Steel must have a minimum yield strength of 33 ksi. Minimum thickness of PMDF is 20 gage and that of support angles and protective angles is 12 gage.

Submit two copies of forming plans for PMDF to the Engineer. These plans must show all essential details of proposed form sheets, closures, fasteners, supports, connectors, special conditions and size and location of welds. These plans must clearly show areas of tension flanges for steel beams and provisions for protecting the tension flanges from welding notch effects by inclusion of separating sheet metal or other positive method. These plans must be designed, signed, and sealed by a licensed professional engineer. Department approval of these plans is not required, but the Department reserves the right to require modifications to the plans. The Contractor is responsible for the adequacy of these plans.

The details and notes shown on this standard are to be used as a guide in preparation of the forming plans.

All material, labor, tools and incidentals necessary to form a bridge deck with Permanent Metal Deck Forms is considered subsidiary to Item 422, "Concrete Superstructures".

DESIGN NOTES:

As a minimum, PMDF and support angles must be designed for the dead load of the form, reinforcement and concrete plus 50 psf for construction loads. Flexural stresses due to these design loads must not exceed 75 percent of the yield strength of the steel. Allowable stress for weld metal must be 12,400 psi.

Maximum deflection under the weight of forms, reinforcement and concrete or 120 psf, whichever is greater, shall not exceed the following:

1/180 of the form design span, but not more than 0.50", for design spans of 10' or less.

1/240 of the form design span, but not more than 0.75", for design spans greater than 10'.

The form design span must not be less than the clear distance between beam flanges, measured parallel to the form flutes, minus 2".

CONSTRUCTION NOTES:

Form sheets must not be permitted to rest directly on the top of beam flanges. Form sheets must be securely fastened to form supports and must have a minimum bearing length of one inch at each end. Form supports must be placed in direct contact with beam flanges.

All attachments must be made by permissible welds, screws, bolts, clips or other means shown on the the forming plans. All sheet metal assembly screws must be installed with torque-limiting devices to prevent stripping. Only welds or bolts must be used to support vertical loads.

Welding and welds must be in accordance with the provisions of Item 448, "Structural Field Welding", pertaining to fillet welds. All welds must be made by a qualified welder in accordance with Item 448.

All permanently exposed form metal, where the galvanized coating has been damaged, must be thoroughly cleaned and repaired in accordance with Item 445, "Galvanizing". Minor heat discoloration in areas of welds need not be touched up.

Flutes must line up uniformly across the entire width of the structure where main reinforcing steel is located in the flute.

Construction joints will not be permitted unless shown on the plans. The location of and forming details for any construction joint used must be shown on the forming plans. Forms below a construction joint must be removed after curing of the slab.

A sequence for uniform vibration of concrete must be approved by the Engineer prior to concrete placement. Attention must be given to prevent damage to the forms, yet provide proper vibration to prevent voids or honeycomb in the flutes and at headers and/or construction joints.

FOR PRESTR CONC U-BEAM BRIDGES:
Size, spacing, and orientation of bottom mat of slab reinforcement must match the top mat of reinforcing shown on the span details except all bottom mat bars are to be #5.

FOR PRESTR CONC TX-GIRDER BRIDGES:
See Miscellaneous Slab Details, Prestr Concrete I-Girders (IGMS) standard sheet for bottom mat reinforcing.

Texas Department of Transportation

Bridge Division Standard

PERMANENT METAL DECK FORMS

PMDF

FILE: pmdfste1-19.dgn	DN: TxDOT	CK: TxDOT	DW: TxDOT	CK: TxDOT
©TxDOT April 2019	CONT	SECT	JOB	HIGHWAY
REVISIONS				
	DIST	COUNTY		SHEET NO.
				332

DISCLAIMER:
The use of this standard is governed by the "Texas Engineering Practice Act". No warranty of any kind is made by TxDOT for any purpose whatsoever. TxDOT assumes no responsibility for the conversion of this standard to other formats or for incorrect results or damages resulting from its use.

DATE:
FILE:

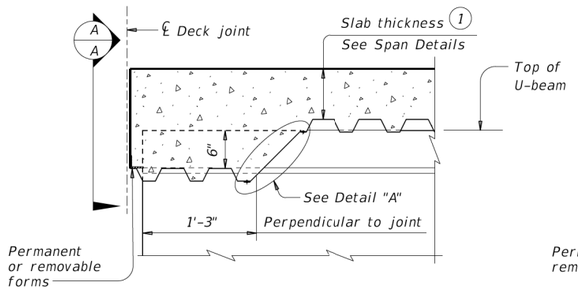

AT THICKENED SLAB END FOR U-BEAMS

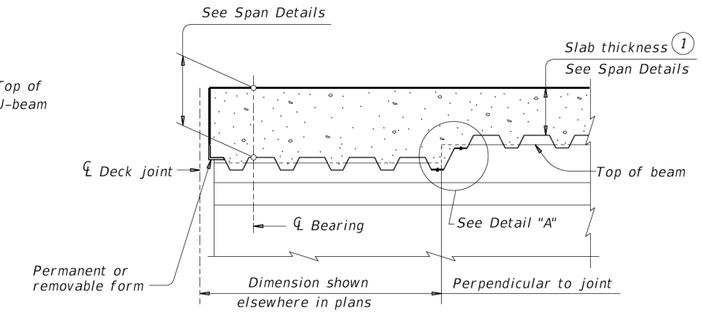

AT THICKENED SLAB END FOR PRESTRESSED I-BEAMS, I-GIRDERS AND STEEL BEAMS

Showing 1-beam block-out. No block-out for I-girders or steel beams.

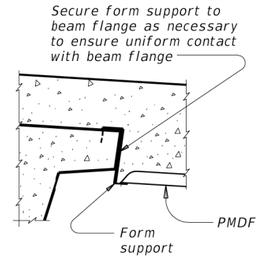

SECTION A-A

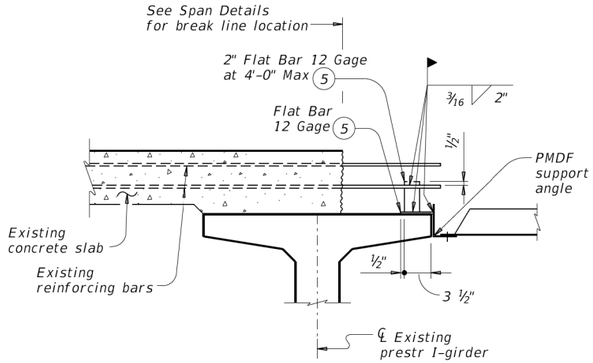

SHOWING PRESTRESSED CONCRETE I-BEAMS, I-GIRDERS AND U-BEAMS

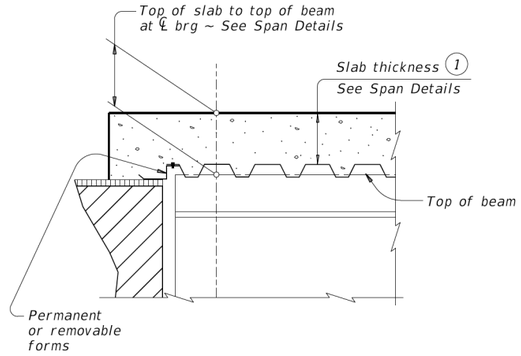

AT SLAB OVER ABUT BKWL OR INV TEE STEM FOR CONC BEAMS WITHOUT THICKENED SLAB END

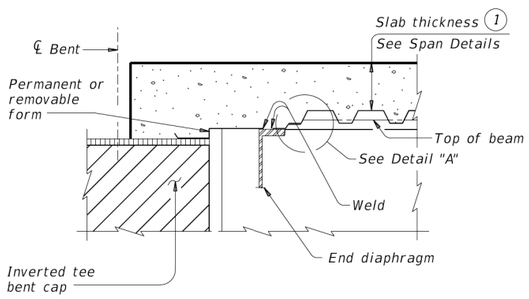

AT SLAB OVER INV TEE STEM FOR STEEL BEAMS WITHOUT THICKENED SLAB END

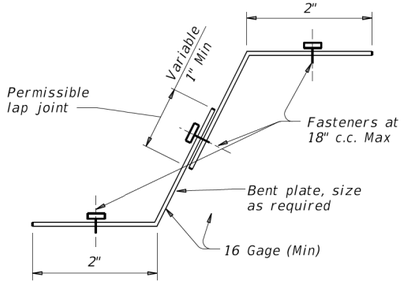

DETAIL "A"

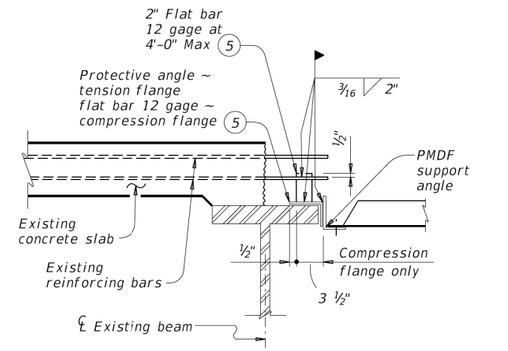

SHOWING STEEL BEAMS

WIDENING DETAILS

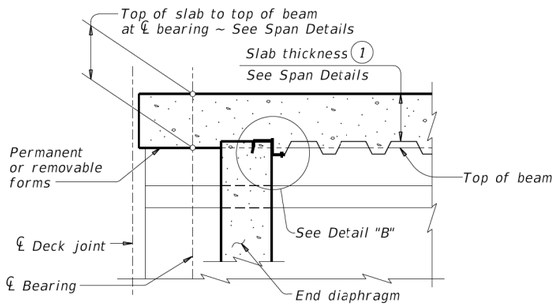

AT CONC END DIAPHRAGM FOR PRESTRESSED I-BEAMS AND STEEL BEAMS

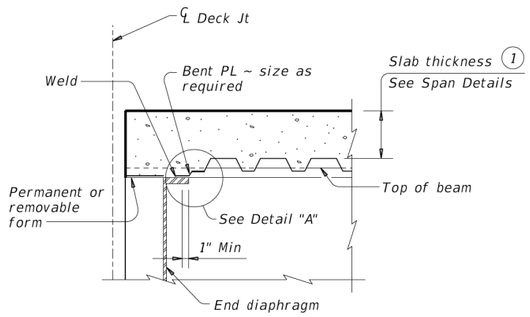

AT END DIAPHRAGM FOR STEEL BEAMS WITHOUT THICKENED SLAB END

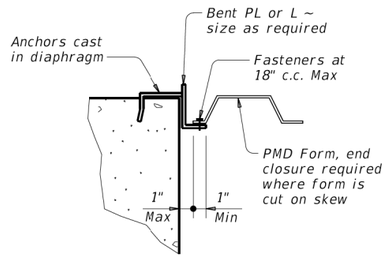

DETAIL "B"

(1) Slab thickness minus 5/8" if corrugations match reinforcing bars

(5) Minimum yield stress of 12 gage bars shall be 40 ksi

DETAILS AT ENDS OF BEAMS

SHEET 2 OF 2

Texas Department of Transportation

Bridge Division Standard

PERMANENT METAL DECK FORMS

PMDF

FILE: pmdfste1-19.dgn	DN: TxDOT	CK: TxDOT	DW: TxDOT	CK: TxDOT
©TxDOT April 2019	CONT	SECT	JOB	HIGHWAY
REVISIONS	DIST	COUNTY		SHEET NO.
				333

DISCLAIMER:
The use of this standard is governed by the "Texas Engineering Practice Act". No warranty of any kind is made by TxDOT for any purpose whatsoever. TxDOT assumes no responsibility for the conversion of this standard to other formats or for incorrect results or damages resulting from its use.

DATE:
FILE:

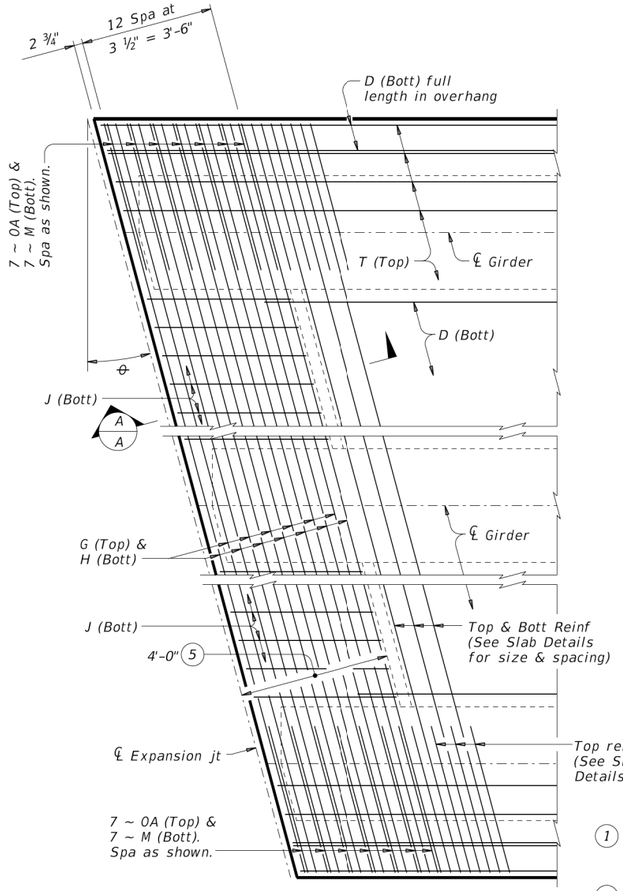

PARTIAL PLAN FOR SLABS WITHOUT BREAKBACK

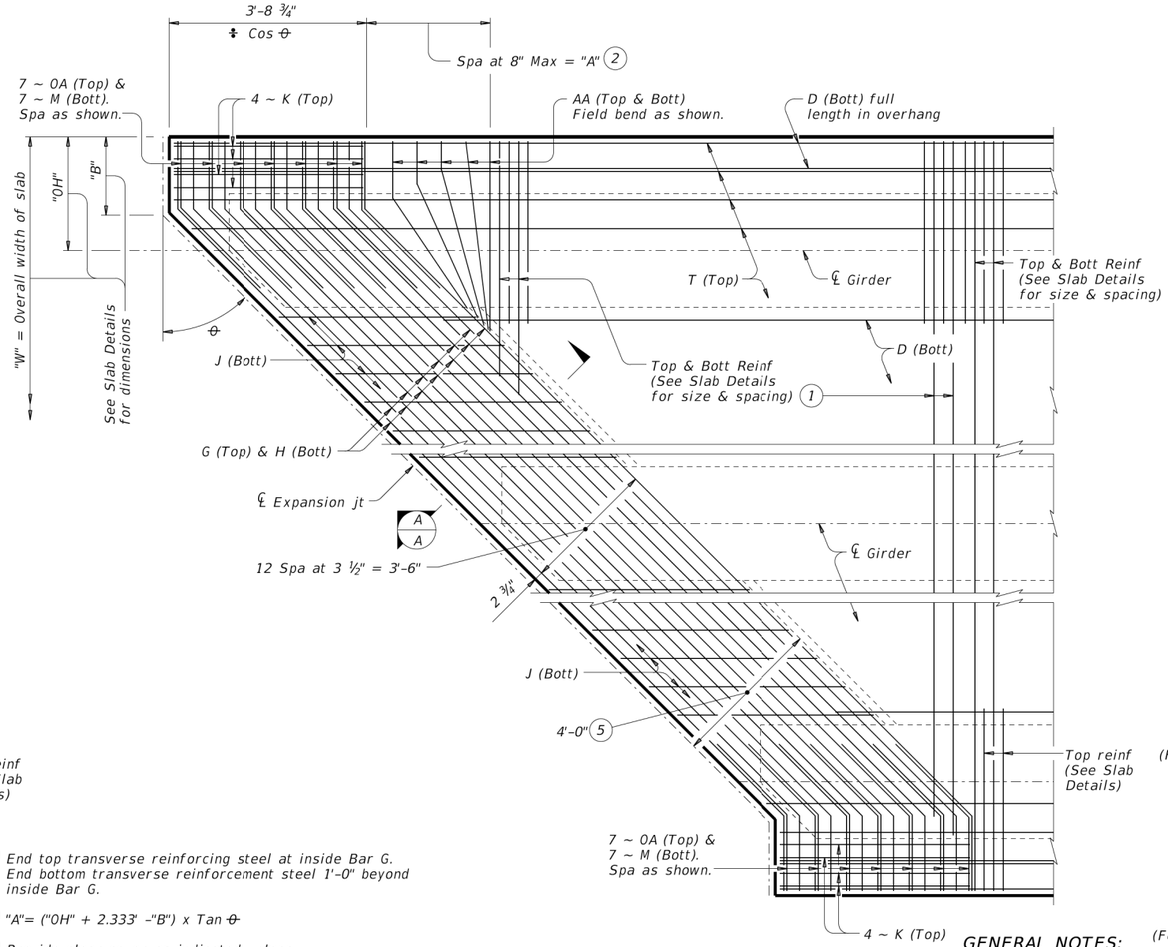

PARTIAL PLAN FOR SLABS WITH BREAKBACK

(1) End top transverse reinforcing steel at inside Bar G. End bottom transverse reinforcement steel 1'-0" beyond inside Bar G.

(2) "A"= ("OH" + 2.333' -"B") x Tan θ

(3) Provide clear cover as indicated unless otherwise shown on Span Details.

(4) Only required on slabs with breakbacks.

(5) Thickened slab end dimensioned perpendicular to face of bkwl, centerline interior bent or face of inverted-T stem.

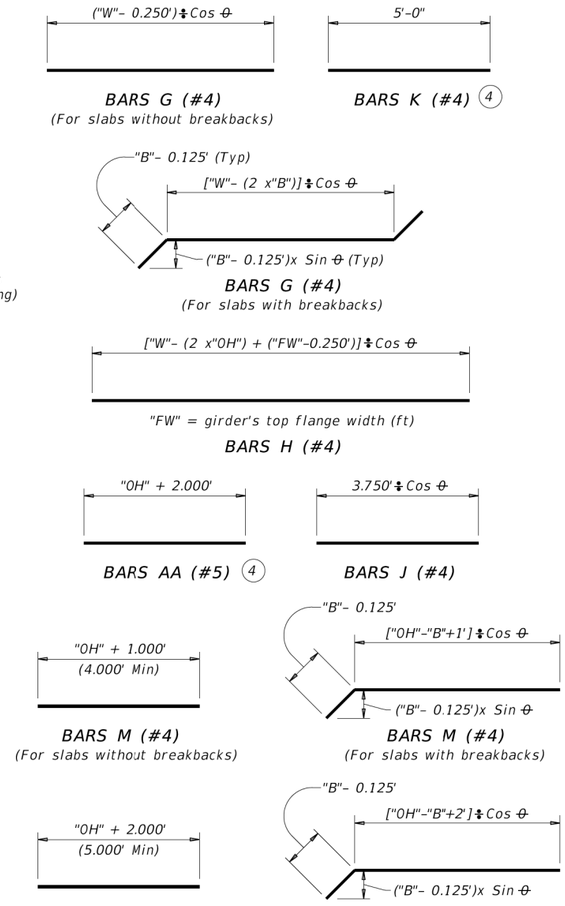

GENERAL NOTES:

Designed according to AASHTO LRFD Bridge Design Specifications.
These details are restricted to Prestressed Concrete I-Girder Spans.
These details are to be used in conjunction with the Span Details and PCP standard (if prestressed concrete panels are used).
When Option 2 from PCP standard is used, provide Bars AA, G, K and OA in the slab.

MATERIAL NOTES:

Provide Grade 60 reinforcing steel.
If slab reinforcing steel is shown on the Slab Details to be epoxy coated, then Bars AA, G, K, H, J, M and OA must be epoxy coated.
Provide bar laps, where required, as follows:
Uncoated ~ #4 = 1'-7"
Epoxy Coated ~ #4 = 2'-5"

Cover dimensions are clear dimensions, unless noted otherwise.
Reinforcing bar dimensions shown are out-to-out of bar.

HL93 LOADING

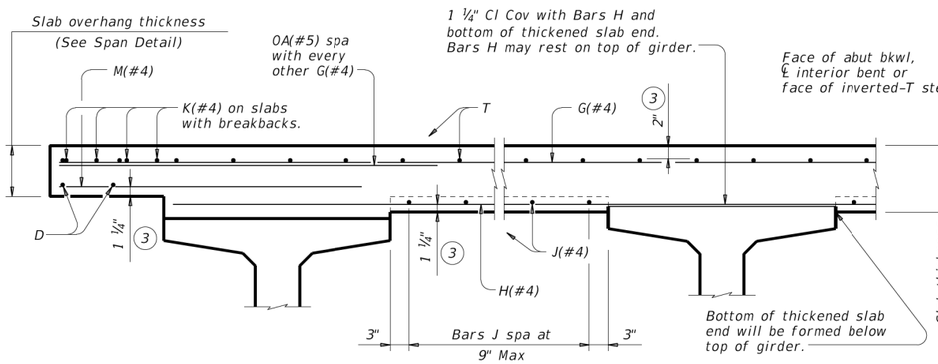

2" AND MORE OF HAUNCH — LESS THAN 2" OF HAUNCH

TYPICAL TRANSVERSE SECTION

(Showing Prestressed Conc I-Girders at ℄ Brg)

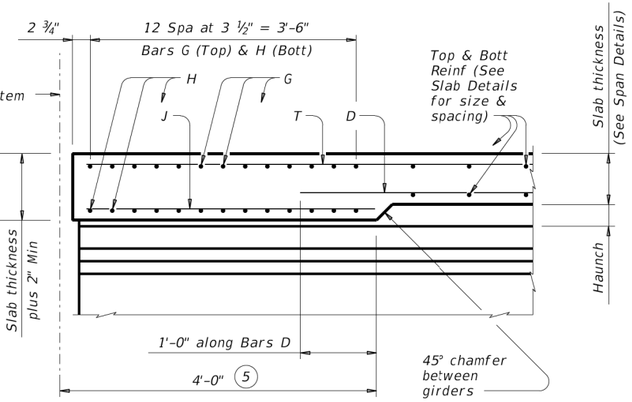

SECTION A-A

(Showing with 2" and more of haunch)

Texas Department of Transportation

Bridge Division Standard

THICKENED SLAB END DETAILS

PRESTRESSED CONCRETE I-GIRDER SPANS

IGTS

FILE: igtssts1-17.dgn	DN: TxDOT	CK: TxDOT	DW: JTR	CK: TxDOT
©TxDOT August 2017	CONT	SECT	JOB	HIGHWAY
REVISIONS				
	DIST	COUNTY		SHEET NO.
				334

DISCLAIMER:
The use of this standard is governed by the "Texas Engineering Practice Act". No warranty of any kind is made by TxDOT for any purpose whatsoever. TxDOT assumes no responsibility for the conversion of this standard to other formats or for incorrect results or damages resulting from its use.

DATE:
FILE:

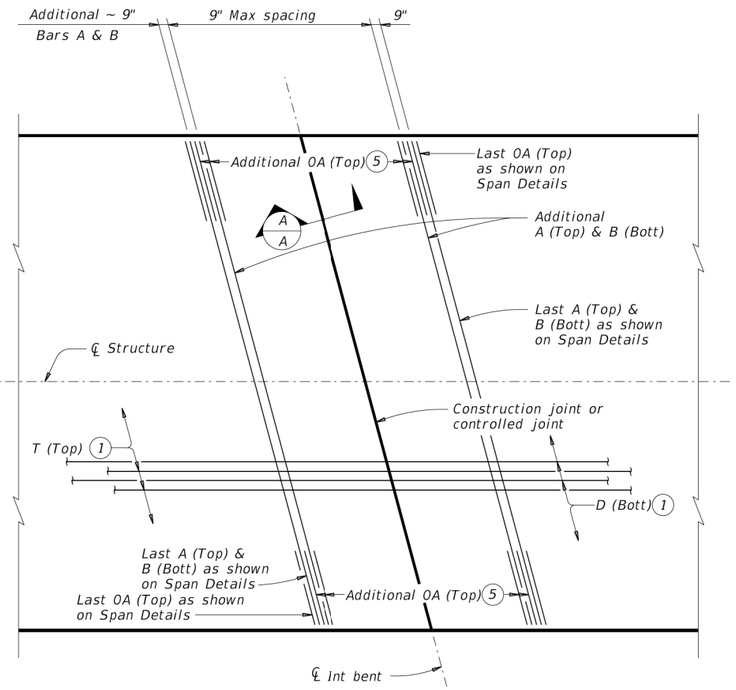

PLAN FOR 0° OR 15° SKEW

(Showing 15° skew)

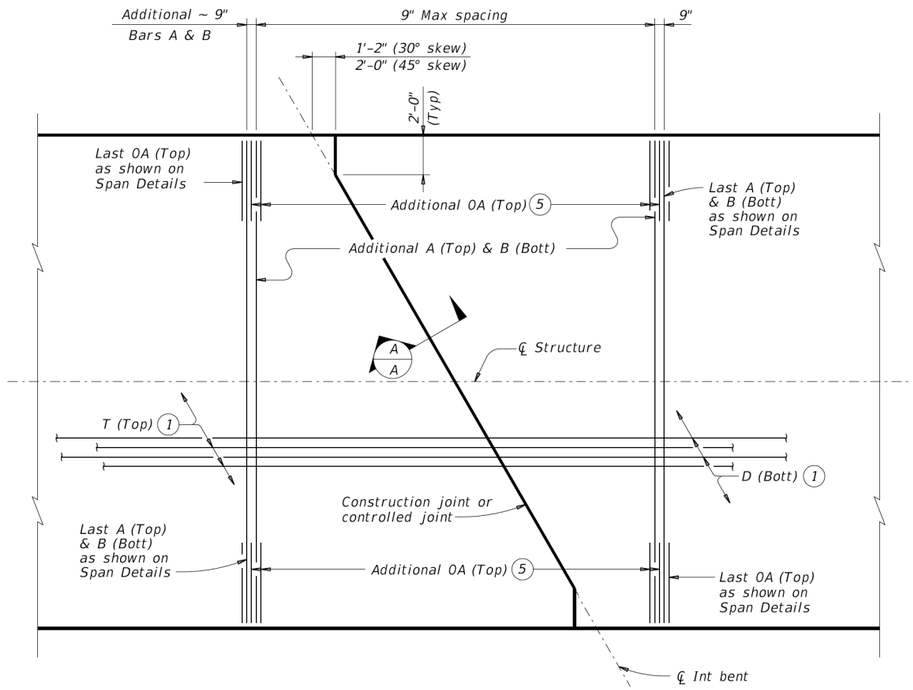

PLAN FOR 30° OR 45° SKEW

(Showing 30° skew)

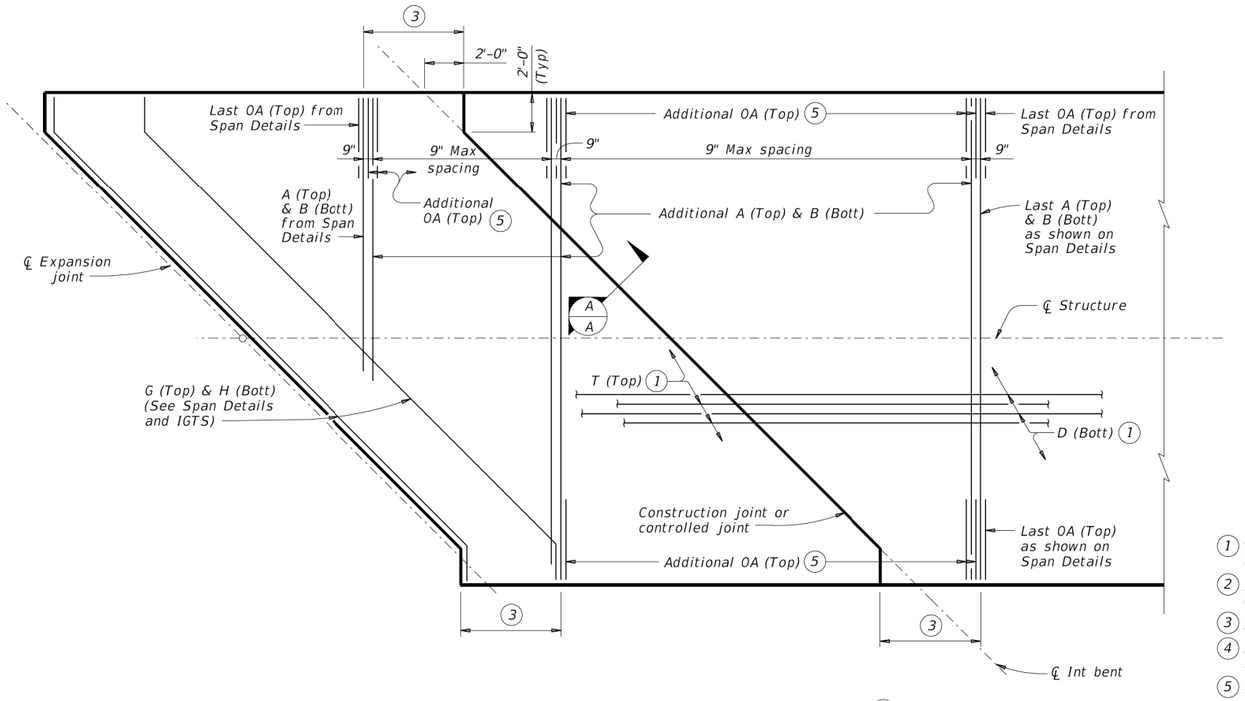

PLAN FOR 45° SKEW 4

(Showing short span condition.)

BARS OA (#5)

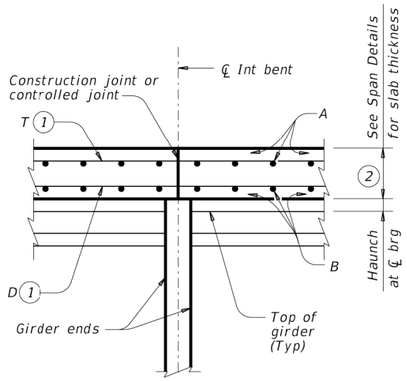

SECTION A-A

Bars 0A (Top) not shown for clarity.

1. Top and bottom mats must be continuous through joint.
2. Maintain a constant slab thickness over the bent.
3. 5'-4" as shown on Span Details.
4. Use these details when no full slab width bars A and B are shown on Span Details.
5. Bars 0A (Top) at 9" Max spacing between Bars A (Top).
6. Values in table assume a temperature change of 70° F after erection when calculating thermal movement in one direction (not total).

TABLE OF (6) ALLOWABLE UNIT LENGTH

Max Rdwy Grade, Percent	Unit Length Factor
0.00	4.1
1.00	3.9
2.00	3.7
3.00	3.5
4.00	3.3
5.00	3.1

Unit length must not exceed the length of the shortest end span times the Unit Length Factor shown in table or 400', whichever is less.

BAR TABLE

BAR	SIZE
A	#4
B	#4
D	#4
T	#4
0A	#5

The details shown on this sheet are applicable for two and three span units comprised of the same girder type.
Units may be comprised of different span lengths. See "Table of Allowable Unit Length".

GENERAL NOTES:

Designed according to AASHTO LRFD Bridge Design Specifications.

This standard is drawn showing right forward skew. See Bridge Layout for actual skew direction.

CONSTRUCTION NOTES:

Where multi-span units are indicated on the Bridge Layout, the thickened slab end details and reinforcement shown on IGTS standard (Bars AA, G, H, J, K, and M) and on the Span Details will be omitted where slabs are continuous over interior bents. At these locations, the slab details and reinforcement will be as shown on this sheet or on PCP standard (if using this option).

Thickened slab end reinforcement and details still apply at expansion joint locations (ends of units).

See Span Details for remainder of slab reinforcement and details.

MATERIAL NOTES:

Provide Grade 60 reinforcing steel.

Provide Class "S" concrete (f'c = 4,000 psi). Provide Class "S" (HPC) if shown elsewhere on the plans.

Provide bar laps, where required, as follows:
Uncoated ~ #4 = 1'-7"
Epoxy Coated ~ #4 = 2'-5"

The details shown on this sheet are applicable for use only with the Prestressed Concrete I-Girder Standard Designs shown on standards IGSD-24, IGSD-28, IGSD-30, IGSD-32, IGSD-38, IGSD-40 and IGSD-44.

HL93 LOADING

Texas Department of Transportation

Bridge Division Standard

CONTINUOUS SLAB DETAILS

PRESTR CONC I-GIRDER SPANS

IGCS

FILE: igcs1sts-19.dgn	DN: JMH	CK: TxDOT	DW: JTR	CK: TxDOT
©TxDOT August 2017	CONT	SECT	JOB	HIGHWAY
REVISIONS 10-19: Added bubble note 6.	DIST	COUNTY		SHEET NO. 335

DISCLAIMER:
The use of this standard is governed by the "Texas Engineering Practice Act". No warranty of any kind is made by TxDOT for any purpose whatsoever. TxDOT assumes no responsibility for the conversion of this standard to other formats or for incorrect results or damages resulting from its use.

DATE:
FILE:

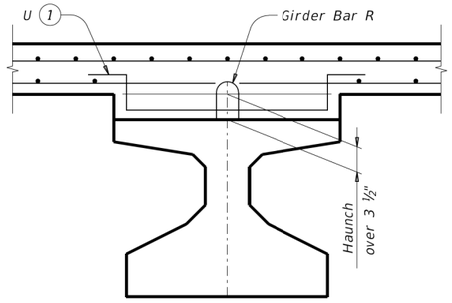

HAUNCH REINFORCING DETAIL

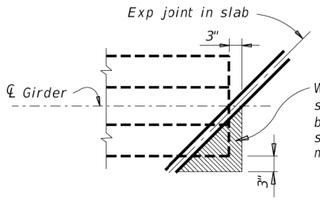

Where flanges project under slab of adjacent span, provide a minimum of ½" clearance between top of girder and bottom of adjacent slab. Polystyrene or other suitable compressible material may be used as a filler.

TREATMENT AT GIRDER END FOR SKEWED SPANS

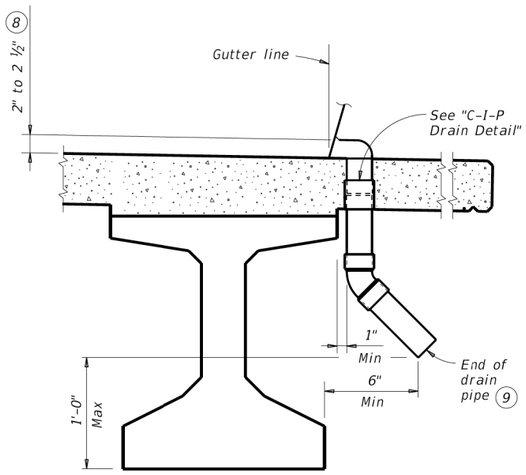

DRAIN DETAIL (10)

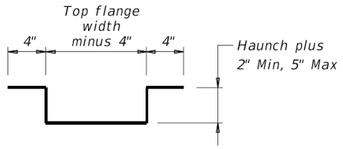

BARS U (#4)

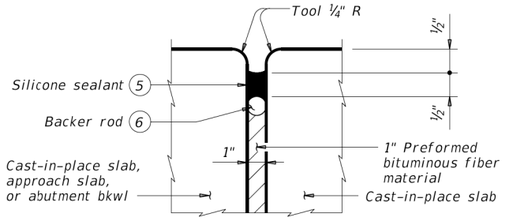

TYPE A JOINT DETAIL (7)

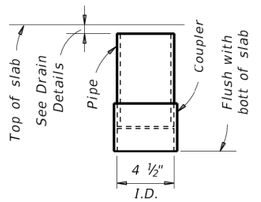

C-I-P DRAIN DETAIL (2)

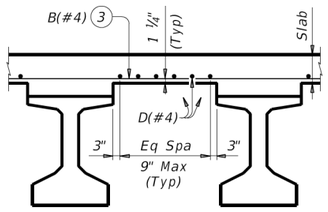

TYPICAL PART TRANSVERSE SLAB SECTION WITHOUT PCP (4)

Top reinforcing steel not shown for clarity.

(1) Space Bars U with girder Bars R in all areas where measured haunch exceeds 3 ½".

(2) Roughen outside of PVC with coarse rasp or equal to ensure bond with cast-in-place concrete.

(3) Bars B(#4) spaced at 9" Max with 2" end cover. Overhang option, Contractor's may end alternating bars B(#4) at centerline outside girder.

(4) Provide Grade 60 reinforcing steel. Provide bar laps, where required, as follows:
Uncoated ~ #4 = 1'-7"
Epoxy coated ~ #4 = 2'-5"

(5) Class 7 silicone sealant that conforms to DMS-6310. Install when ambient temperature is between 55°F and 85°F and rising. Engineer to determine allowable hours for sealant application.

(6) 1 ¼" backer rod must be compatible with joint sealant. Use of multiple pieces to create a backer rod cross section is not permitted. Top of backer rod must be convex as shown.

(7) The maximum distance between Type A expansion joints is 100'. See Bridge Layout for location of joints.

(8) Drain entrance formed in rail or sidewalk.

(9) Water may not be discharged onto girders.

(10) All drain pipe and fittings to be 4" diameter (Sch 40) PVC. See Item 481 "Pipe for Drains" for pipe, connections and solvent welding. Bend reinforcing steel to clear PVC 1". Drain length and location is as directed by the Engineer. Drains are not permitted over roadways or railways, or within 10'-0" of bent caps. Degrease outside of exposed PVC, apply acrylic water base primer, then coat with same surface finishing material as used for outside girder face. Variations of the above designs, as required for the type of rail used and its location on the structure, may be installed with the approval and direction of the Engineer.

GENERAL NOTES:
Designed according to AASHTO LRFD Bridge Design Specifications.
Payment for Type A joint will be as per Item 454, "Bridge Expansion Joints."
All other items (reinforcing steel, drains, etc.) shown on this sheet are subsidiary to other bid items.

Cover dimensions are clear dimensions, unless noted otherwise.
Reinforcing bar dimensions shown are out-to-out of bar.

DECK FORMWORK NOTES:
Overhang bracket hangers are limited to a safe working load of 3,600 lbs, applied to and along the axis of a coil rod at 45 degrees from vertical, regardless of higher loads permitted by hanger manufacturers. Do not place a hanger less than 12" from girder end. Space hangers accordingly.

Texas Department of Transportation

Bridge Division Standard

MISCELLANEOUS SLAB DETAILS
PRESTR CONCRETE I-GIRDERS

IGMS

FILE: igmssts1-19.dgn	DN: TxDOT	CK: TxDOT	DW: JTR	CK: TxDOT
©TxDOT August 2017	CONT	SECT	JOB	HIGHWAY
REVISIONS				
10-19: Modified Note 7. Type A now a pay item.	DIST	COUNTY		SHEET NO.
				336

DISCLAIMER:
The use of this standard is governed by the "Texas Engineering Practice Act". No warranty of any kind is made by TxDOT for any purpose whatsoever. TxDOT assumes no responsibility for the conversion of this standard to other formats or for incorrect results or damages resulting from its use.

DATE:
FILE:

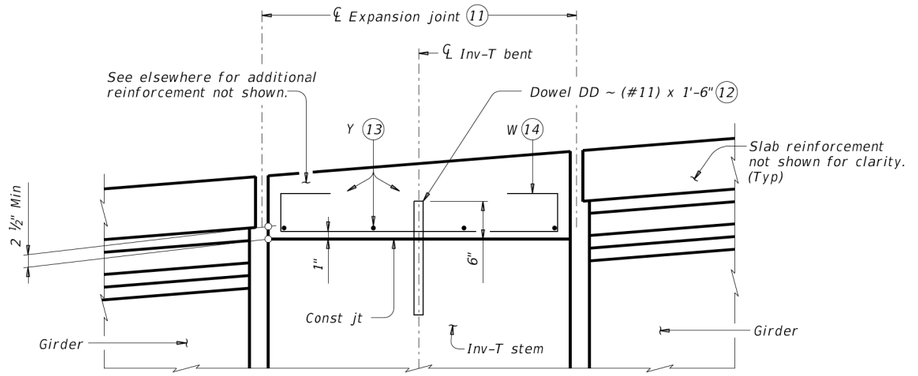

SHOWING EXPANSION JOINTS

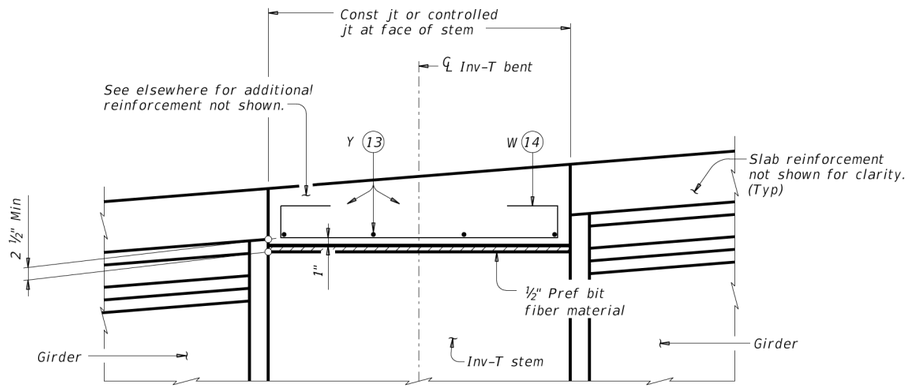

SHOWING CONST JTS OR CONTROLLED JTS

REINFORCEMENT OVER INV-T BENTS

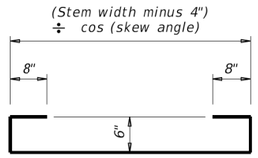

BARS W (#4)

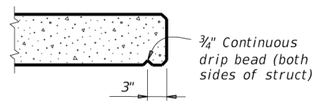

DRIP BEAD DETAIL

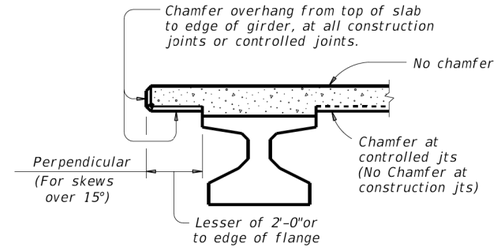

CHAMFER LIMITS DETAIL (15)

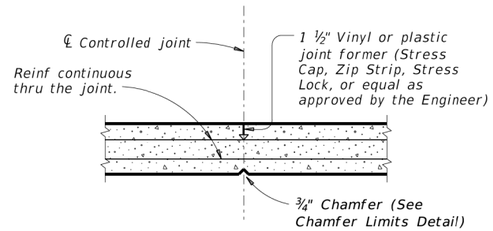

CONTROLLED JOINT DETAIL

(Saw-cutting is not allowed)

(11) See Layout for joint type.

(12) Dowels DD (#11) spaced at 5 Ft Max. See Inv-T bents for quantity and location.

(13) Space Bars Y (#4) at 12" Max. Use 2" end cover. Number of Bars Y must satisfy spacing limit. Place parallel to bent.

(14) Space Bars W at 12" Max (3" from end of cap). Tilt if necessary to maintain cover requirements. Place parallel to longitudinal slab reinforcement.

(15) See Span details for type of joint and joint locations.

Texas Department of Transportation

Bridge Division Standard

MISCELLANEOUS SLAB DETAILS

PRESTR CONCRETE I-GIRDERS

IGMS

FILE: igmsstst1-19.dgn	DN: TxDOT	CK: TxDOT	DW: JTR	CK: TxDOT
©TxDOT August 2017	CONT	SECT	JOB	HIGHWAY
REVISIONS				
10-19: Modified Note 7. Type A now a pay item.	DIST	COUNTY		SHEET NO.
				337

DISCLAIMER:
The use of this standard is governed by the "Texas Engineering Practice Act". No warranty of any kind is made by TxDOT for any purpose whatsoever. TxDOT assumes no responsibility for the conversion of this standard to other formats or for incorrect results or damages resulting from its use.

DATE:
FILE:

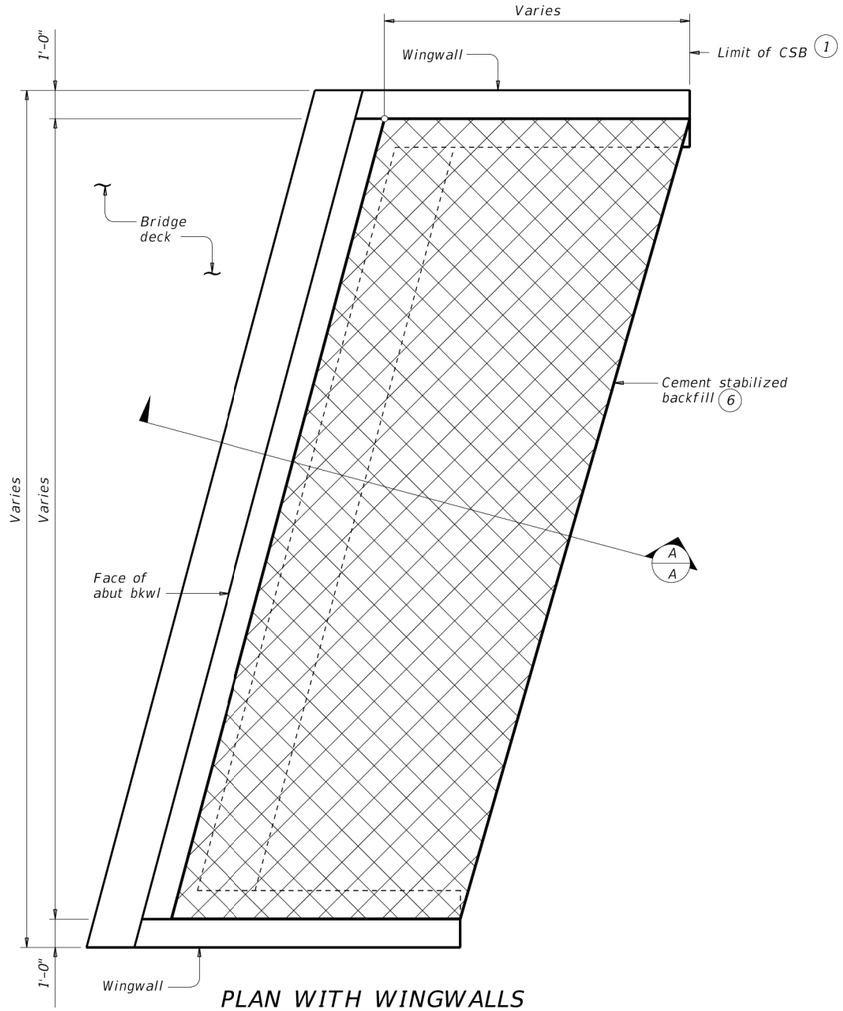

PLAN WITH WINGWALLS

Cast-in-place retaining walls similar.

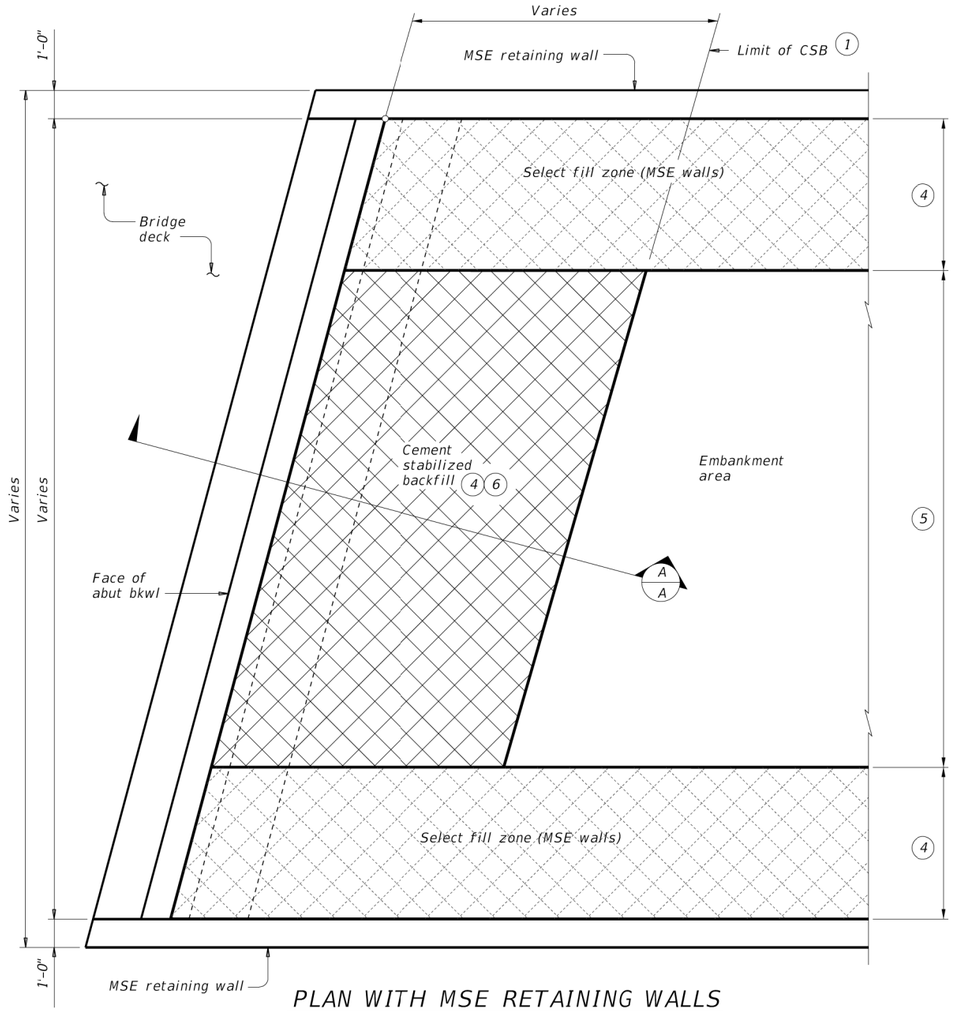

PLAN WITH MSE RETAINING WALLS

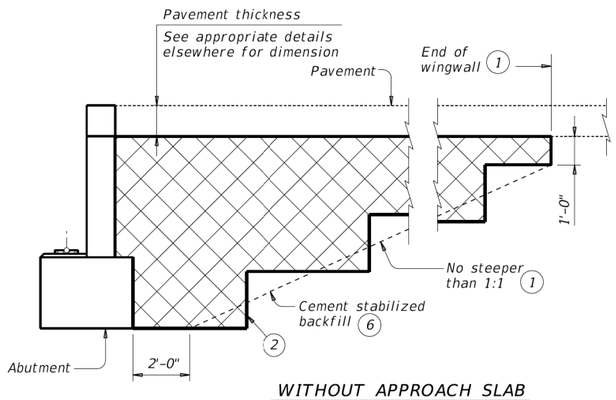

WITHOUT APPROACH SLAB

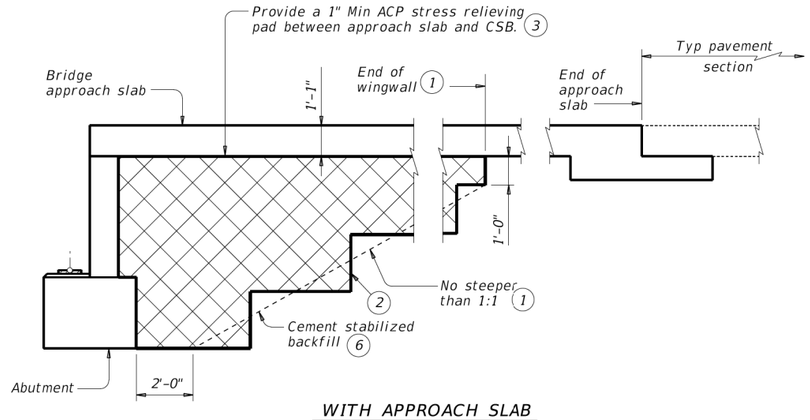

WITH APPROACH SLAB

SECTION A-A

(1) Usual limit of Cement Stabilized Backfill is at end of wingwall. Extend CSB limits as required to maintain a slope no steeper than 1:1 at bottom of backfill.

(2) Bench backfill as shown with 12" (approximate) bench depths.

(3) Other material can be used as a stress relieving pad if approved by Engineer.

(4) Where MSE retaining walls are present, adjust CSB limits to accommodate the select fill zone. See retaining wall details for additional information.

(5) When distance between select fill zones is less than 5'-0", MSE select fill may be substituted for cement stabilized backfill with approval from the Engineer.

(6) If shown in the plans flowable backfill can be used as a substitute for cement stabilized backfill with the following constraints:
a). If flowable backfill is to be placed over MSE backfill then a filter fabric will be placed over the MSE backfill prior to placement of the flowable fill; and
b). Place flowable fill in lifts not exceeding 2 feet in height, place each successive lift when the previous lift has stiffened/hardened (i.e. has lost its flowability).

GENERAL NOTES:

Provide Cement Stabilized Backfill (CSB) meeting the requirements of Item 400, "Excavation and Backfill for Structures", to the limits shown at bridge abutments.

If required elsewhere in the plans, provide Flowable Backfill meeting the requiremnets of Item 401, "Flowable Backfill", the limits shown at bridge abutments.

Details are drawn showing left forward skew. See Bridge Layout for actual skew direction.

These details do not apply when Concrete Block retaining walls are used in lieu of wingwalls.

Texas Department of Transportation

Bridge Division Standard

CEMENT STABILIZED ABUTMENT BACKFILL

BRIDGE ABUTMENT

CSAB

FILE: csabste1-19.dgn	DN: TxDOT	CK: TxDOT	DW: TxDOT	CK: TxDOT
©TxDOT April 2019	CONT	SECT	JOB	HIGHWAY
REVISIONS				
	DIST	COUNTY		SHEET NO.
				338

DISCLAIMER:
The use of this standard is governed by the "Texas Engineering Practice Act". No warranty of any kind is made by TxDOT for any purpose whatsoever. TxDOT assumes no responsibility for the conversion of this standard to other formats or for incorrect results or damages resulting from its use.

DATE:
FILE:

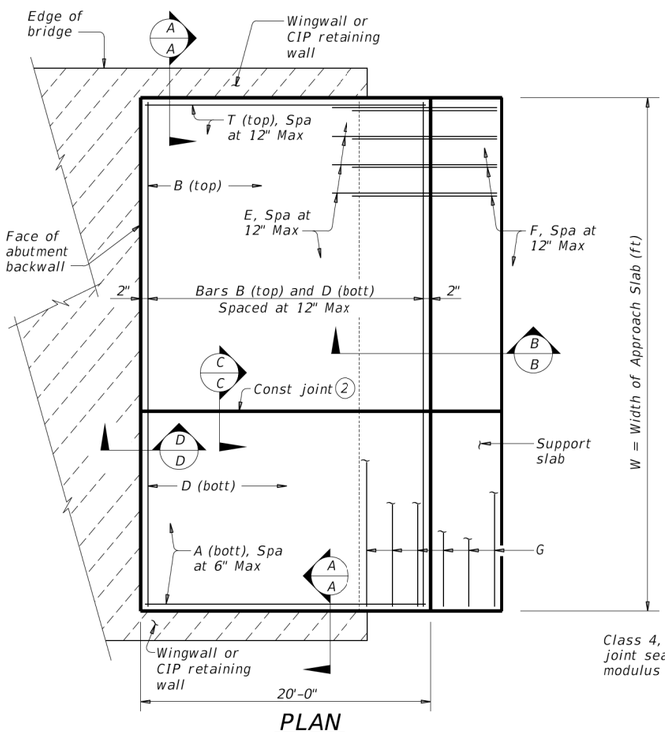

PLAN

(Showing non-skewed approach slab.)

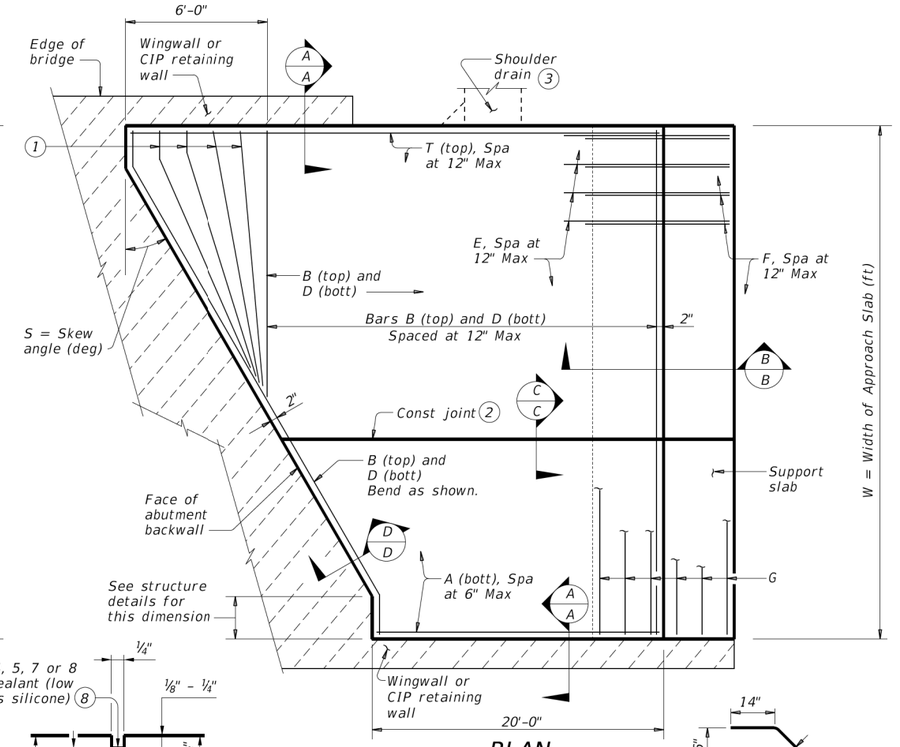

PLAN

(Showing skewed approach slab.)

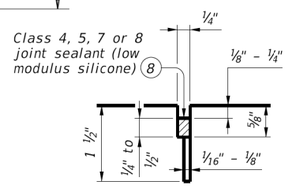

LONGITUDINAL SAW CUT JOINT DETAIL

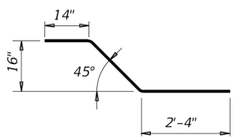

BARS E (#5)

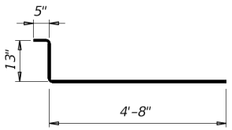

BARS F (#5)

BAR TABLE	
BAR	SIZE
A	#8
B	#5
D	#5
E	#5
F	#5
G	#5
T	#5

APPROXIMATE QUANTITIES (4)

Reinf steel weight = 8.5 Lbs/SF of Approach Slab
= 18.4 Lbs/LF of Support Slab

Vol of Appr Slab Conc (CY) = 1.057W – 0.008W x T + 0.02W² Tan S
(Includes Support Slab)

W = Width of Approach Slab (ft)

T = Conc Pavement Thickness (in)

S = Skew Angle (deg)

(1) Flare Bars B and D in this region (1'-6" Max Spa, 3" Min Spa). Minimum flared bar length = 2'-6". Bend bars as necessary.

(2) Provide longitudinal construction joints that align with longitudinal construction joints in the bridge slab with bridges built in stages. Other longitudinal construction joints must receive approval of the Engineer.

(3) See details elsewhere in plans for shoulder drain location and details.

(4) For Contractor's information only. Quantities shown are for one approach slab only.

(5) On portion of support slab that supports the concrete pavement, adjust top surface elevation, if required, to accommodate concrete pavement thickness. Smooth trowel finish. Oil top of support slab with 60 grade oil and apply heavy coat of powdered graphite. Press down one layer of 30# roofing felt.

(6) Multiple piece tie bars are acceptable at longitudinal construction joints provided minimum laps shown are achieved.

(7) See details elsewhere in plans for required cross-slope.

(8) Place in accordance with Item 438.

(9) Provide backer rod that is 25% larger than joint opening and compatible with the sealant.

(10) If bridge rail is present at the wingwall or CIP retaining wall, place ½" rebonded recycled tire rubber between concrete railing and top of approach slab as shown when concrete railing projects over the approach slab.

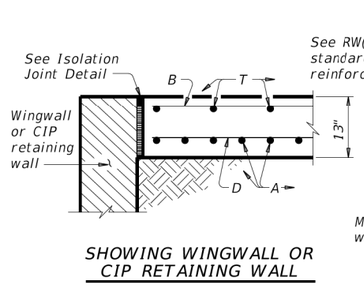

SHOWING WINGWALL OR CIP RETAINING WALL

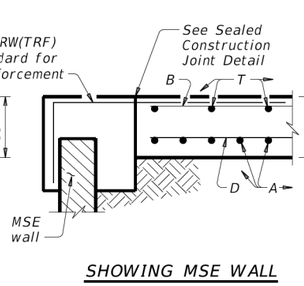

SHOWING MSE WALL

SECTION A-A

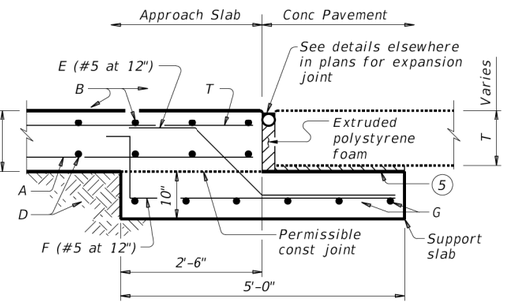

SECTION B-B

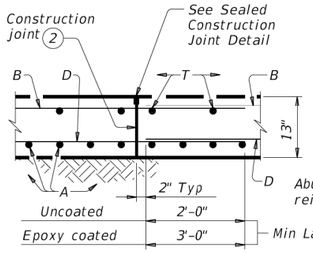

SECTION C-C (6)

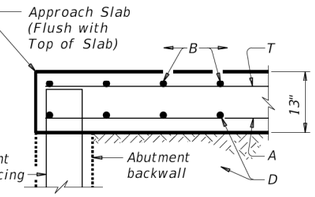

SECTION D-D

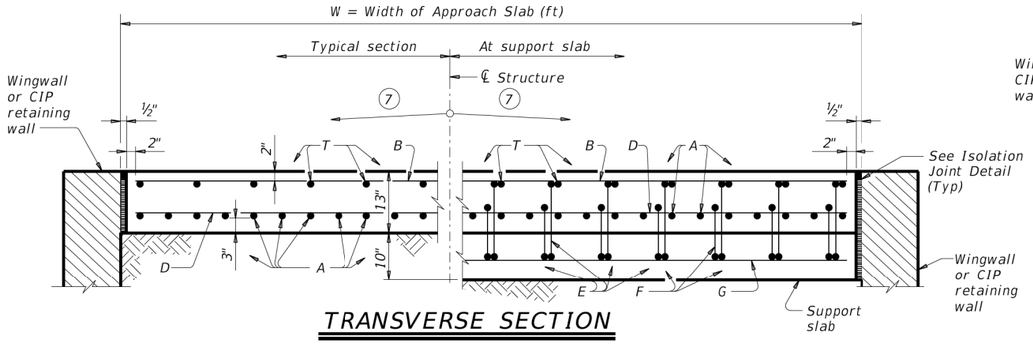

TRANSVERSE SECTION

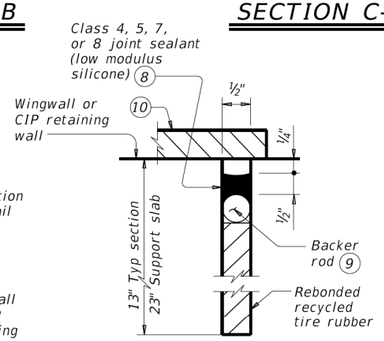

ISOLATION JOINT DETAIL

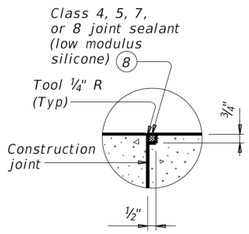

SEALED CONSTRUCTION JOINT DETAIL

GENERAL NOTES:

Construct approach slab in accordance with Item 422.

Provide Class "S" concrete with a minimum compressive strength of 4,000 psi.

Provide Grade 60 reinforcing steel.

Provide longitudinal joints as shown on the Longitudinal Saw Cut Joint Detail at lane lines and shoulders when width between longitudinal construction joints or edges of approach slab exceeds 16 feet. Saw cut joints within 24 hours of concrete placement to a depth of 1 ½" and seal in accordance with Item 438. Alternately, provide a controlled joint consisting of 1 ½" vinyl or plastic joint former (Stress Cap, Zip Strip, Stress Lock, or equal as approved by the Engineer.)

Provide rebonded recycled tire rubber joint filler that meets the requirements of DMS-6310, "Joint Sealants and Fillers."

Construct the subgrade or subbase away from the bridge for a minimum distance of 100 feet prior to the approach slab, unless otherwise indicated on the plans.

Compact and finish the subgrade or foundation for the approach slab to the typical cross-section and to the lines and grades shown on the plans.

Cure for 4 days using water or membrane curing per Item 422.

Provide a 1" (asphaltic concrete pavement or asphalt stabilized base) stress relieving pad between the approach slab and cement stabilized backfill or cement treated base. Other stress relieving pads may be used if approved by the Engineer.

All details shown herein are subsidiary to bridge approach slab.

Cover dimensions are clear dimensions, unless noted otherwise. Reinforcing bar dimensions shown are out-to-out of bar.

Texas Department of Transportation

Bridge Division Standard

BRIDGE APPROACH SLAB

CONCRETE PAVEMENT

BAS-C

FILE: bascste1-19.dgn	DN: TxDOT	CK: TxDOT	DW: TxDOT	CK: TxDOT
©TxDOT April 2019	CONT	SECT	JOB	HIGHWAY
REVISIONS				
	DIST	COUNTY		SHEET NO.
				339

DISCLAIMER:
The use of this standard is governed by the "Texas Engineering Practice Act". No warranty of any kind is made by TxDOT for any purpose whatsoever. TxDOT assumes no responsibility for the conversion of this standard to other formats or for incorrect results or damages resulting from its use.

DATE:
FILE:

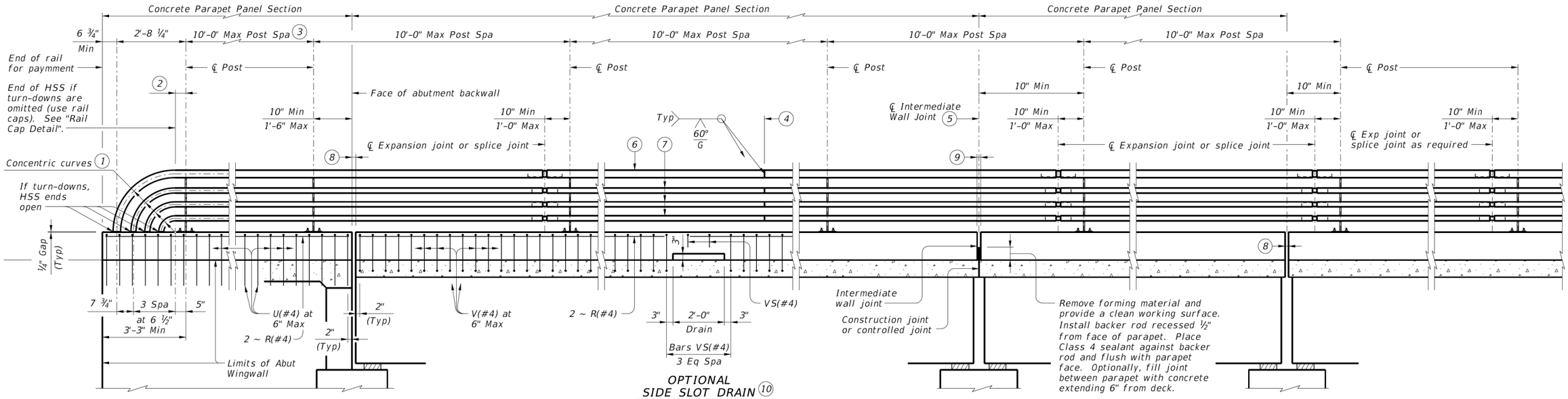

ROADWAY ELEVATION OF RAIL

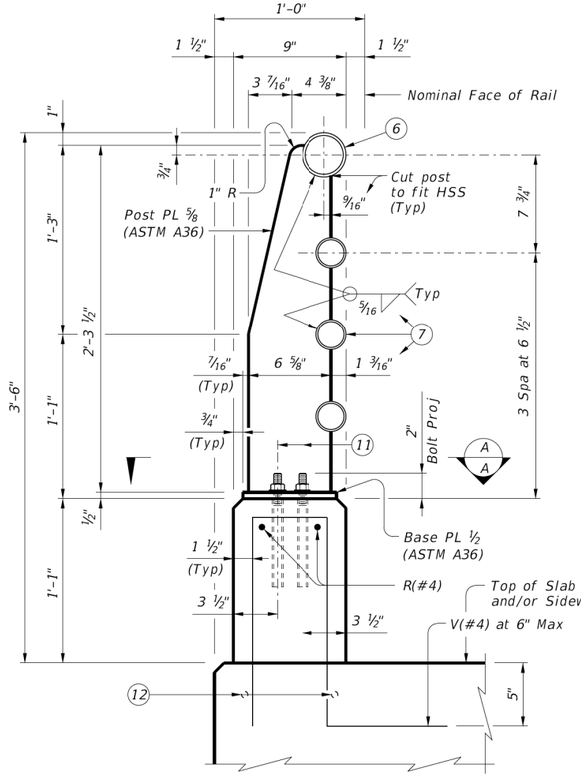

ON BRIDGE SLAB

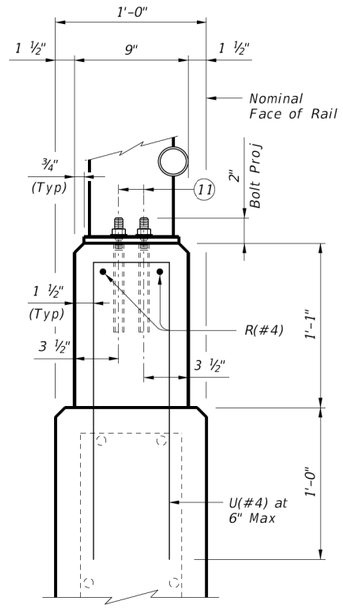

ON ABUTMENT WINGWALLS OR CIP RETAINING WALLS

SECTIONS THRU RAIL

(1) Portion of railing with turn-downs to be used or omitted as indicated on Bridge Layout.

(2) 10" Min ~ 1'-6" Max if turn-downs are omitted.

(3) Min of 2 posts required on wingwall.

(4) One shop splice per panel is permitted (with minimum 85 percent penetration). The weld may be square groove or single vee groove. Grind smooth.

(5) Provide at all interior bents without slab expansion joints.

(6) HSS 3.500 x 0.216 (Rail Member)

(7) HSS 2.375 x 0.154 (Rail Member)

(8) Same as slab joint opening. (5" Max Expansion Joint)

(9) Opening ¼" Min, ¾" Max.

(10) Drains may be used where shown elsewhere on the plans or as directed by the Engineer. Do not place drains over railroad tracks, lower roadways, or sidewalks. When side slot drains are used, provide 3'-0" Min clear spacing between drains slots and ℄ bents or joint locations with a 8'-0" Min clear spacing between drain slots.

(11) ℄ anchor bolts. See "Material Notes" for anchor bolt information.

(12) Top longitudinal slab bar may be adjusted laterally 3" plus or minus to tie reinforcing.

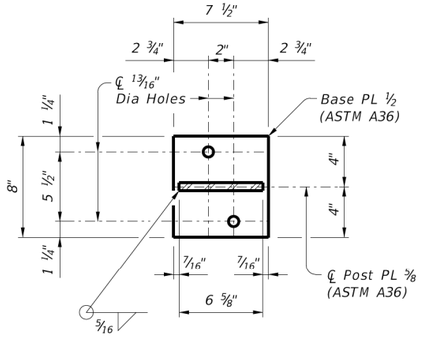

SECTION A-A

Showing base plate detail.

Texas Department of Transportation

Bridge Division Standard

PEDESTRIAN RAIL

TYPE PR22

FILE: rlstd029-19.dgn	DN: TAR	CK: TBE	DW: JTR	CK: TAR
©TxDOT September 2019	CONT	SECT	JOB	HIGHWAY
REVISIONS				
	DIST	COUNTY		SHEET NO.
				340

DISCLAIMER:
The use of this standard is governed by the "Texas Engineering Practice Act". No warranty of any kind is made by TxDOT for any purpose whatsoever. TxDOT assumes no responsibility for the conversion of this standard to other formats or for incorrect results or damages resulting from its use.

DATE:
FILE:

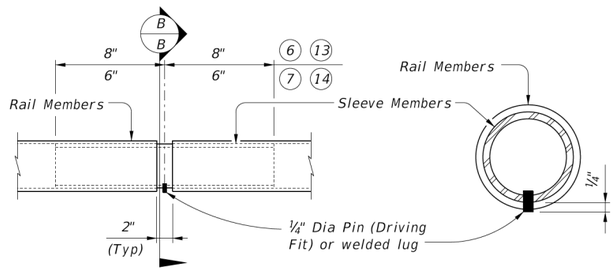

AT SPLICES OR EXP JTS SECTION B-B

PIPE SPLICE DETAIL

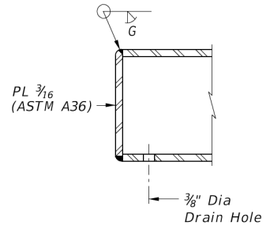

RAIL CAP DETAIL

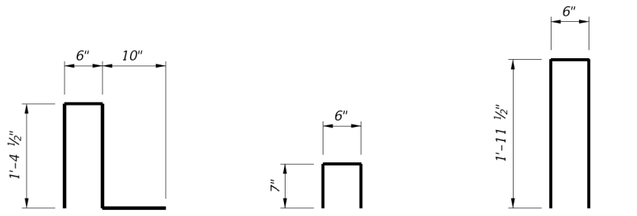

BARS V (#4) BARS VS (#4) BARS U (#4)

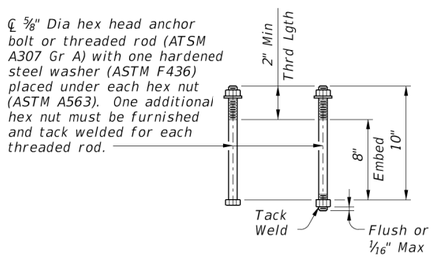

CAST-IN-PLACE ANCHOR BOLT OPTIONS

6 HSS 3.500 x 0.216 (Rail Member)
7 HSS 2.375 x 0.154 (Rail Member)
13 HSS 2.875 x 0.203 (Sleeve Member)
14 HSS 1.900 x 0.145 (Sleeve Member)

CONSTRUCTION NOTES:

This rail may be slip-formed if approved by the Engineer when epoxy adhesive anchor bolts are used.

Slip-forming parapet is not allowed if anchor bolts are cast with parapet wall.

If rail is slip-formed, apply an heavy epoxy bead 1" behind toe of traffic side of rail to concrete deck just prior to slip forming. Provide a ⅜" width x ¼" tall heavy epoxy bead with Type III, Class C or a Type V epoxy.

At the Contractor's option anchor bolts may be cast with the parapet. See "Material Notes".

Panel lengths of railing must be attached to a minimum of three posts except on abutment wingwalls.

Test adhesive anchors in accordance with Item 450.3.3, "Tests". Test 3 anchors per 100 anchors installed. Perform corrective measures to provide adequate capacity if any of the tests do not meet the required test load. Repair damage from testing as directed.

Face of rail, posts and parapet must be vertical transversely unless otherwise approved. Rail posts must be perpendicular to top of adjacent concrete parapet grade. Use Type VIII epoxy mortar under post base plates if gaps larger than 1/16" exist.

For curved railing applications, fabricate the HSS rail to the radius when the radius is 600' or less. Submit shop drawings for approval when tubes are required to be fabricated to a radius. Shop drawings must be submitted to the Engineer for approval.

Round or chamfer all exposed edges of steel components 1/16" by grinding prior to galvanizing.

Chamfer all exposed concrete corners.

MATERIAL NOTES:

Provide ASTM A500 Gr B, A1085 or A53 Gr B for all HSS.

Galvanize all metal components of steel rail system. Apply additional coatings when shown elsewhere on the plans. When plans require paint over galvanizing, follow the requirements for painting galvanized steel in Item 445, "Galvanizing" and when field painting, Item 446, "Field Cleaning and Painting Steel". Sleeve members and anchor bolts must receive galvanization prior to installation and only field paint after installation unless directed otherwise by Engineer.

Anchor bolts must be ⅝" Dia ASTM A307 Gr A fully threaded rods with one hex nut and one hardened steel washer (ASTM F436). Nuts must conform to ASTM A563 requirements. Embed fully threaded rods into parapet using a Type III, Class C, D, E, or F anchor adhesive. Minimum adhesive anchor embedment depth is 7". Anchor adhesive chosen must be able to achieve a nominal bond strength in tension of a single anchor, Na, 8.5 kips (edge distance must be accounted for). Submit signed and sealed calculations or the manufacturer's published literature showing the proposed anchor adhesive's ability to develop this load to the Engineer for approval prior to use. Anchor installation, including hole size, drilling, and clean out, must be in accordance with Item 450, "Railing".

Optional cast-in-place anchor bolts must be ⅝" Dia ASTM A307 Gr A with one hardened steel washer (ASTM F436) placed under each hex nut or ASTM A307 Gr A threaded rods with one tack welded hex nut each and with one hex nut with one hardened steel washer (ASTM F436) each. Nuts must conform to ASTM A563 requirements.

Provide Class "C" concrete. Provide Class "C" (HPC) if required elsewhere.

Epoxy coat or galvanize all reinforcing if slab bars are epoxy coated or galvanized.

Provide Grade 60 reinforcing steel.

Deformed Welded Wire Reinforcement (WWR) (ASTM A1064) of equal size and spacing may be substituted for Bars U, and V unless noted otherwise.

Provide bar laps, where required, as follows:

Uncoated or galvanized ~ #4 = 1'-7"
Epoxy coated ~ #4 = 2'-5"

GENERAL NOTES:

Designed according to AASHTO LRFD Specifications.

Do not use this railing on bridges with expansion joints providing more than 5" movement.

Rail anchorage details shown on this standard may require modification for select structure types. See appropriate details elsewhere in plans for these modifications.

For all rails, submit erection drawings showing section lengths, splice locations, rail post spacing and anchor bolt setting for approval.

Average weight of railing: 146 plf ~ total
122 plf ~ Conc (with no Overlay)
24 plf ~ Steel

Cover dimensions are clear dimensions, unless noted otherwise.
Reinforcing bar dimensions shown are out-to-out of bar.

Texas Department of Transportation

Bridge Division Standard

PEDESTRIAN RAIL

TYPE PR22

FILE: rlstd029-19.dgn	DN: TAR	CK: TBE	DW: JTR	CK: TAR
©TxDOT September 2019	CONT	SECT	JOB	HIGHWAY
REVISIONS				
	DIST	COUNTY		SHEET NO.
				341

DISCLAIMER:
The use of this standard is governed by the "Texas Engineering Practice Act". No warranty of any kind is made by TxDOT for any purpose whatsoever. TxDOT assumes no responsibility for the conversion of formats or for incorrect results or damages resulting from its use.

DATE: 1/9/2020 4:00:20 PM
FILE: H:\Projects\510\30\03\Design\Civil\Standards\Retaining Walls\rwstde05.dgn

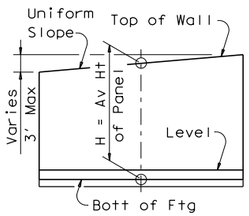

H DEFINITION

Wall Height "H"	PROPERTIES							REINFORCING STEEL FOR ONE 32' PANEL (DESIGN A)																										QUANTITY FOR ONE 32' PANEL		Wall Height "H"
	WALL DIMENSIONS						Max Soil Press	A_1 ~ 26 #5 at 15" c-c		A_2 ~ 25 #6 at 15" c-c		A_3 ~ 25 #7 at 15" c-c		A_4 ~ 26 #8 at 15" c-c		A_5 ~ 25 #9 at 15" c-c		A_6 ~ 25 #11 at 15" c-c		A_7 ~ 26 #11 at 15" c-c		B ~ 26 #5 at 15" c-c		C					D (#5) at 12" c-c		Dowel F at 12" c-c		H (#5) at 12" c-c		T (#5) at 12" c-c		U ~ 26 #5 at 15" c-c		CONC (CY)	REINF (LB)	
(Ft)	Fw	Tw	Sw	Hw	Ft	Kw	T/SF	Lgth	Wt	Lgth	Wt	Lgth	Wt	Lgth	Wt	Lgth	Wt	Lgth	Wt	Lgth	Wt	Lgth	Wt	Size	No	Spa	Lgth	Wt	No	Wt	No	Wt	No	Wt	No	Wt	Lgth	Wt			(Ft)
2	1'-8"	8"	1'-0"	0	9"	9"	0.11																						4	131	3	24			2	66	3'-4"	90	3.6	312	2
3	2'-0"	1'-0"	1'-0"	0	9"	9"	0.15																						6	197	4	32	2	66	2	66	5'-4"	145	5.1	506	3
4	2'-8"	1'-4"	1'-0"	4"	1'-0"	9"	0.21	3'-10"	104													3'-6"	95	#4	26	15"	1'-10"	32	8	263	6	48	2	66	2	66	7'-4"	199	7.4	873	4
5	3'-6"	1'-9"	1'-0"	9"	1'-0"	9"	0.23	5'-3"	142													4'-6"	122	#4	26	15"	2'-3"	39	10	329	7	56	2	66	3	99	8'-4"	226	9.6	1079	5
6	4'-3"	2'-2"	1'-0"	1'-1"	1'-0"	9"	0.24	6'-8"	181													5'-6"	149	#4	26	15"	2'-8"	46	12	394	8	64	3	99	3	99	8'-4"	226	11.6	1259	6
7	5'-0"	2'-6"	1'-0"	1'-6"	1'-0"	9"	0.27	8'-0"	217													6'-6"	176	#4	26	15"	3'-0"	52	14	460	9	72	3	99	3	99	8'-4"	226	13.7	1401	7
8	5'-8"	2'-10"	1'-0"	1'-10"	1'-0"	9"	0.30	9'-4"	253													7'-6"	203	#4	26	15"	3'-4"	58	16	526	10	80	3	99	4	131	8'-4"	226	15.7	1575	8
9	6'-4"	3'-2"	1'-0"	2'-2"	1'-0"	9"	0.33	10'-8"	284													8'-6"	231	#4	26	15"	3'-8"	64	18	591	11	88	3	99	4	131	8'-4"	226	17.7	1714	9
10	7'-0"	3'-6"	1'-0"	2'-6"	1'-0"	9"	0.36	12'-0"	325	4'-2"	156											9'-6"	258	#4	38	10"	4'-0"	102	20	657	12	96	4	131	4	131	8'-4"	226	19.6	2082	10
11	7'-9"	3'-10"	1'-0"	2'-11"	1'-0"	9"	0.39	13'-4"	362	5'-4"	200											10'-6"	285	#6	38	10"	4'-4"	247	22	723	13	104	4	131	5	164	8'-4"	226	21.7	2436	11
12	8'-6"	4'-3"	1'-0"	3'-3"	1'-0"	9"	0.40	14'-9"	400	6'-7"	247											11'-6"	312	#6	38	10"	4'-9"	271	24	789	14	112	4	131	5	164	8'-4"	226	23.8	2651	12
13	9'-2"	4'-7"	1'-0"	3'-7"	1'-0"	9"	0.43	16'-1"	436	7'-8"	288	6'-9"	345									12'-6"	339	#7	38	10"	5'-1"	395	26	854	15	120	5	164	6	197	8'-4"	226	25.8	3364	13
14	9'-10"	4'-11"	1'-0"	3'-11"	1'-0"	1'-0"	0.47	17'-5"	472	8'-11"	335	8'-1"	413									13'-6"	366	#8	38	10"	5'-5"	550	28	920	16	128	5	164	6	197	8'-4"	226	28.2	3771	14
15	10'-6"	5'-3"	1'-1 1/8"	4'-1 7/8"	1'-0"	1'-0"	0.50	18'-10"	511	10'-1"	379	9'-6"	485									14'-6"	393	#9	38	10"	5'-9"	743	30	986	17	136	6	197	6	197	8'-4"	226	30.3	4253	15
16	11'-2"	5'-7"	1'-2"	4'-5"	1'-3"	1'-3"	0.55	13'-3"	359	11'-2"	419	10'-11"	558	8'-5"	584							15'-6"	420	#9	38	10"	6'-1"	786	32	1051	18	144	6	197	7	230	8'-4"	226	36.0	4974	16
17	11'-10"	5'-11"	1'-3 1/8"	4'-7 7/8"	1'-3"	1'-3"	0.58	13'-3"	359	12'-5"	466	12'-4"	630	9'-10"	683							16'-6"	447	#9	38	10"	6'-5"	829	34	1117	19	152	7	230	7	230	8'-4"	226	38.5	5369	17
18	12'-6"	6'-3"	1'-4"	4'-11"	1'-6"	1'-3"	0.63	13'-3"	359	13'-7"	510	13'-9"	703	11'-2"	775							17'-6"	475	#9	38	10"	6'-9"	872	34	1117	19	152	7	230	8	263	8'-4"	226	44.3	5682	18
19	13'-3"	6'-7"	1'-5"	5'-3"	1'-6"	1'-6"	0.66	13'-3"	359	14'-9"	554	15'-2"	775	12'-8"	879							18'-6"	502	#9	38	10"	7'-2"	926	36	1183	20	160	7	230	8	263	8'-4"	226	48.1	6057	19
20	13'-10"	6'-11"	1'-6 1/4"	5'-4 3/4"	1'-6"	1'-6"	0.70	13'-3"	359	15'-11"	598	16'-7"	847	14'-1	978							19'-6"	529	#10	38	10"	7'-5"	1213	38	1248	21	168	8	263	8	263	8'-4"	226	50.9	6692	20
21	14'-6"	7'-3"	1'-7"	5'-8"	1'-9"	1'-6"	0.75	13'-3"	359	11'-2"	419	18'-0"	920	15'-5"	1070	9'-7"	815					20'-6"	556	#10	38	10"	7'-9"	1267	40	1314	22	176	8	263	9	296	8'-4"	226	57.7	7681	21
22	15'-2"	7'-7"	1'-8 1/8"	5'-10 7/8"	1'-9"	1'-6"	0.78	13'-3"	359	11'-2"	419	19'-5"	992	16'-11"	1174	10'-11"	928					21'-6"	583	#10	38	10"	8'-1"	1322	42	1380	23	184	8	263	9	296	8'-4"	226	61.0	8126	22
23	16'-0"	8'-0"	1'-9 1/4"	6'-2 3/4"	1'-9"	1'-6"	0.79	13'-3"	359	11'-2"	419	20'-11"	1069	18'-5"	1278	12'-4"	1048					22'-6"	610	#8	76	5"	8'-6"	1725	44	1446	24	192	9	296	10	329	8'-4"	226	64.8	8997	23
24	16'-6"	8'-3"	1'-10 1/8"	6'-4 7/8"	2'-0"	1'-6"	0.86	13'-3"	359	11'-2"	419	22'-3"	1137	19'-9"	1371	13'-7"	1155					23'-6"	637	#8	76	5"	8'-9"	1776	46	1511	25	200	9	296	10	329	8'-4"	226	72.4	9416	24
25	17'-3"	8'-7"	1'-11 1/4"	6'-8 3/4"	2'-0"	1'-6"	0.89	13'-3"	359	11'-2"	419	12'-2"	622	21'-2"	1469	15'-0"	1275	6'-1"	808			24'-6"	664	#8	76	5"	9'-2"	1860	48	1577	26	208	9	296	10	329	8'-4"	226	76.4	10112	25
26	18'-0"	9'-0"	2'-0 1/8"	6'-11 7/8"	2'-3"	1'-6"	0.93	13'-3"	359	11'-2"	419	12'-2"	622	22'-8"	1574	16'-4"	1388	7'-1"	941			25'-6"	692	#8	76	5"	9'-6"	1928	50	1643	27	217	10	329	11	361	8'-4"	226	85.2	10698	26
27	18'-6"	9'-4"	2'-1 1/4"	7'-0 3/4"	2'-3"	1'-6"	0.97	13'-3"	359	11'-2"	419	12'-2"	622	24'-1"	1672	17'-8"	1502	8'-1"	1074			26'-6"	719	#9	76	5"	9'-10"	2541	52	1708	28	225	10	329	11	361	8'-4"	226	89.0	11757	27
28	19'-3"	9'-7"	2'-2 3/8"	7'-5 5/8"	2'-3"	1'-9"	1.00	13'-3"	359	11'-2"	419	12'-2"	622	25'-5"	1764	19'-0"	1615	9'-1"	1206			27'-6"	746	#9	76	5"	10'-1"	2606	54	1774	29	233	10	329	12	394	8'-4"	226	94.5	12293	28
29	20'-0"	10'-0"	2'-3 1/2"	7'-8 1/2"	2'-3"	1'-9"	1.02	13'-3"	359	11'-2"	419	12'-2"	622	27'-0"	1874	20'-5"	1735	10'-1"	1339			28'-6"	773	#9	76	5"	10'-5"	2692	56	1840	30	241	11	361	12	394	8'-4"	226	99.2	12874	29
30	20'-6"	10'-4"	2'-4 5/8"	7'-9 3/8"	2'-3"	1'-9"	1.06	13'-3"	359	11'-2"	419	12'-2"	622	14'-4"	995	21'-9"	1849	11'-1"	1472	17'-0"	2348	29'-6"	800	#10	76	5"	10'-9"	3516	58	1906	31	249	11	361	12	394	8'-4"	226	103.3	15515	30
31	21'-3"	10'-7"	2'-5 3/4"	8'-2 1/4"	2'-3"	1'-9"	1.09	13'-3"	359	11'-2"	419	12'-2"	622	14'-4"	995	23'-0"	1955	12'-1"	1605	18'-4"	2533	30'-6"	827	#10	76	5"	11'-2"	3652	60	1971	32	257	11	361	13	427	8'-4"	226	108.2	16209	31
32	22'-0"	11'-0"	2'-6 1/2"	8'-5 1/2"	2'-6"	1'-9"	1.13	13'-3"	359	11'-2"	419	12'-2"	622	14'-4"	995	24'-5"	2075	13'-1"	1738	19'-10"	2740	31'-6"	854	#10	76	5"	11'-6"	3761	60	1971	32	257	12	394	13	427	8'-4"	226	118.9	16837	32

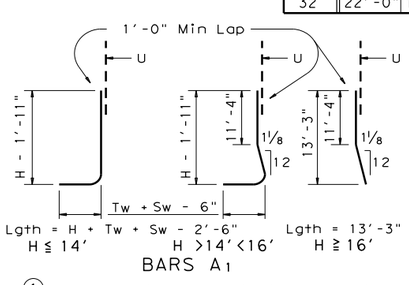

BARS A_1

1. Place vertical bars inside of horizontal bars (Typ both faces).
2. Place footing toe against undisturbed soil.
3. See standard RW 2 for size.

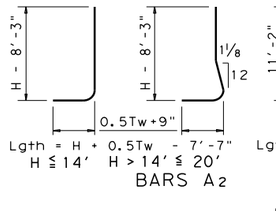

BARS A_2

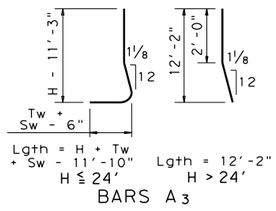

BARS A_3

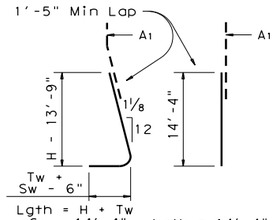

BARS A_4

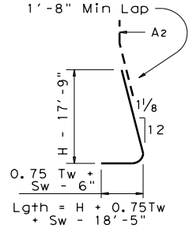

BARS A_5

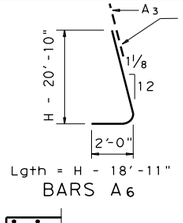

BARS A_6

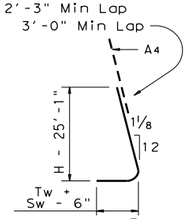

BARS A_7

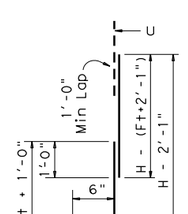

BARS B

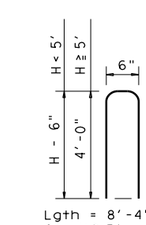

BARS U

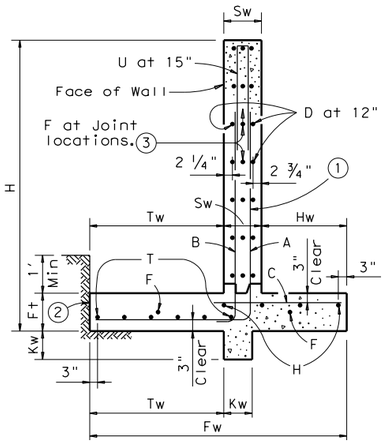

H ≦ 14'

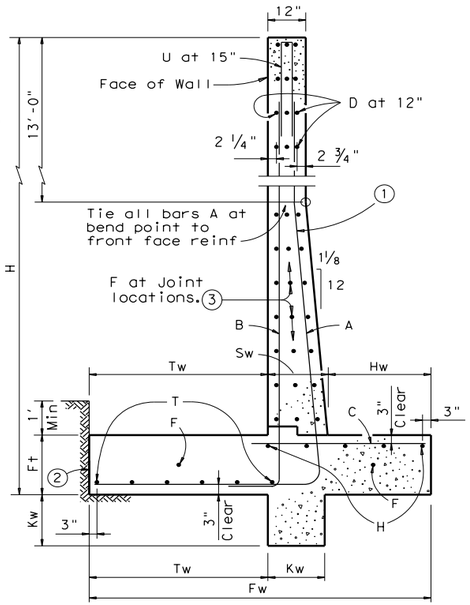

H > 14'

SECTIONS

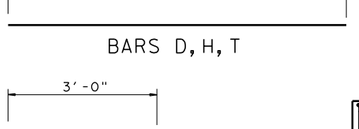

BARS D, H, T

BARS F (3)

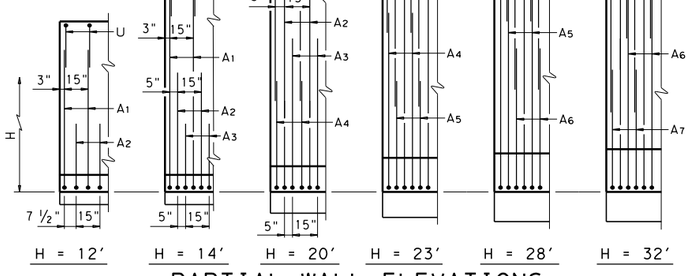

PARTIAL WALL ELEVATIONS

(Showing vertical reinforcing pattern in back face)

GENERAL NOTES:

All concrete to be Class "C".
All reinforcing steel to be Grade 60.
For notes and details not shown on this sheet see sheet RW2.
Quantities are based on "H" being average height of panel.
Retaining Walls are designed to be coded as follows on Retaining Wall Layout Sheets.

HC - 21 - 28
LA - 28 - 32

- Panel Length ~ 32' is standard; 28' requires special quantities
- Average Height "H" of panel
- Design - A = no surcharge or slope above wall; B = slopes up to 4:1; C = traffic surcharge and/or slopes up to 2.5:1
- Footing pressure design ~ L = low, H = high

Texas Department of Transportation

Bridge Division Standard

RETAINING WALLS

RW 1(L)A

FILE: rwstde05.dgn	DN: TxDOT	CK: TxDOT	DW: GHO	CK: MPM
©TxDOT March 2010	CONT	SECT	JOB	HIGHWAY
REVISIONS				KLEIN RD
	DIST	COUNTY		SHEET NO.
	SAT	GUADALUPE		342

DISCLAIMER:
The use of this standard is governed by the "Texas Engineering Practice Act". No warranty of any kind is made by TxDOT for any purpose whatsoever. TxDOT assumes no responsibility for the conversion of this standard to other formats or for incorrect results or damages resulting from its use.

DATE: 1/9/2020 4:00:22 PM
FILE: H:\Projects\510\30\03\Design\Civil\Standards\Retaining Walls\rwstde11.dgn

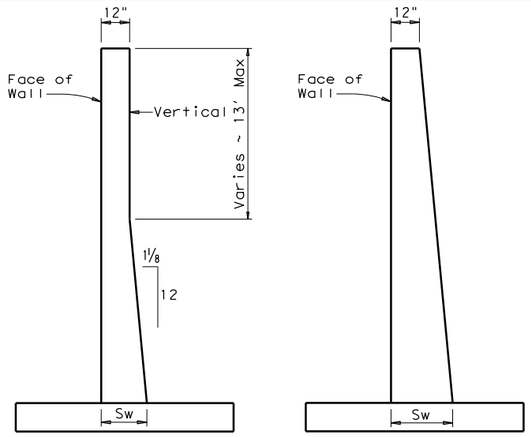

AS DETAILED
ALL HEIGHTS
(Basis for payment)

FRONT FACE VERTICAL
BACK FACE SLOPED

ALTERNATE STEM SLOPE DETAILS

Walls with slopes other than those shown may be used after approval by the Engineer. Sw shall not be less than shown in Table on Sheet 1. No payment will be made for excess concrete due to changing of slope of wall stem.

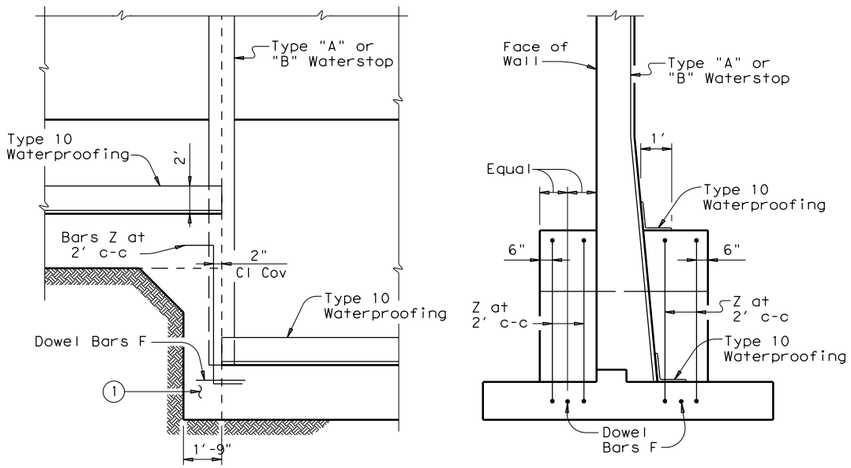

PARTIAL ELEVATION

PARTIAL SECTION

SHOWING WATERSTOP AT FOOTING JOINT

(1) Unreinforced Class "C" Concrete when difference in top of footing elevations is less than 6'. Omit when Dowel Bars F can be placed between adjacent footings with 4" cover top and bottom.

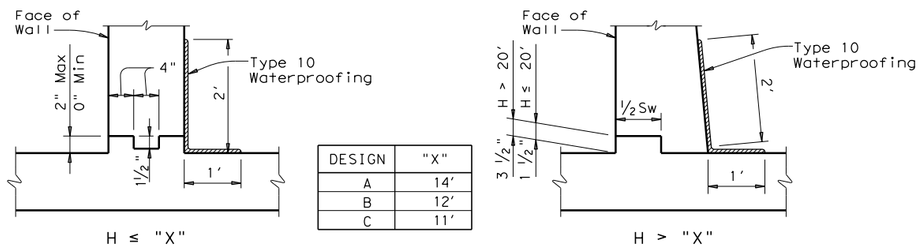

DESIGN	"X"
A	14'
B	12'
C	11'

JOINT AND WATERSTOP DETAILS

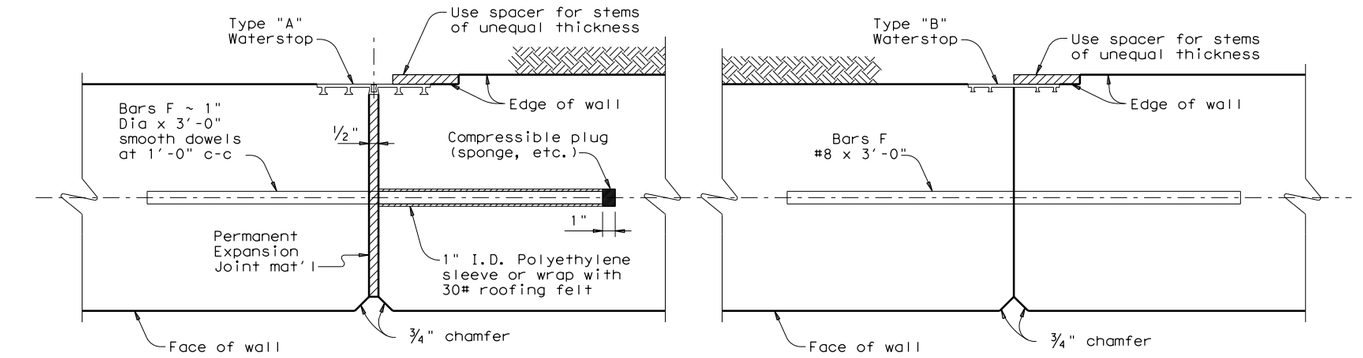

EXPANSION JOINT

CONSTRUCTION JOINT

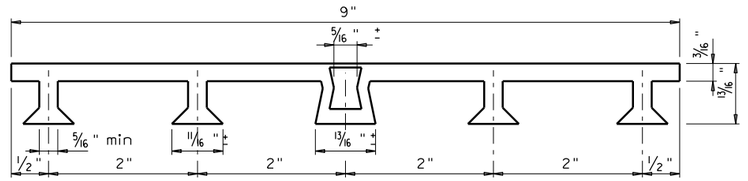

PVC WATERSTOP TYPE "A"

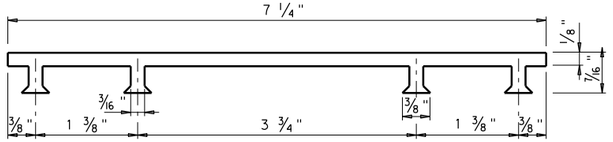

PVC WATERSTOP TYPE "B"

Note: Dimensions and shapes may vary slightly depending on manufacturer.

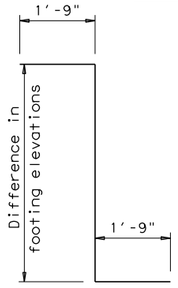

BARS Z (#5)

Omit Bars Z when difference in top of footing elevations is less than 6'.

(2) Crushed blast furnace slag, recycled crushed hydraulic cement concrete or combination there of may not be used.

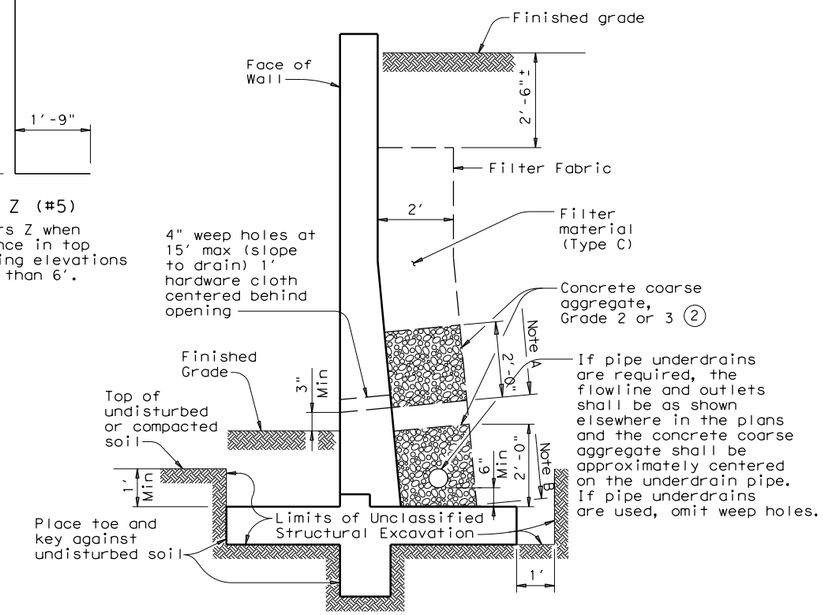

DRAINAGE DETAILS AND EXCAVATION DIAGRAM

Note A: Stop coarse aggregate at this level when weep holes are used.

Note B: Use coarse aggregate to here with filter material above when underdrains are used.

GENERAL NOTES:

Walls are designed assuming unit weight of soil = 120 pcf, and coefficient of horizontal earth pressure = 0.33.

Walls are designed to provide a minimum factor of safety against sliding of 1.5. The undisturbed or compacted soil depth in front of walls, from bottom of Key up, shall not be less than Kw + Ft + 1'.

Retaining walls are detailed to be placed on grades up thru 10% with footing level, with no changes in reinforcing steel. Steeper grades can be accommodated by shortening Bars A1 and B and increasing length of legs of Bars U by the same amount. No change in Quantities will be involved

Retaining walls may be placed on Horizontal Curves by adjusting lengths of footing Bars T and H. Minor revisions of Concrete Quantities may be required.

Designed in accordance with current AASHTO Standard and Interim Specifications.

All concrete to be Class "C".

All reinforcing steel to be Grade 60.

Texas Department of Transportation

Bridge Division Standard

RETAINING WALL MISCELLANEOUS DETAILS

RW 2

FILE: rwstde11.dgn	DN: TxDOT	CK: TxDOT	DW: JGD	CK: MJG
©TxDOT March 2010	CONT	SECT	JOB	HIGHWAY
REVISIONS				KLEIN RD
04-11: Added Note 2.	DIST	COUNTY		SHEET NO.
	SAT	GUADALUPE		343

DISCLAIMER:
The use of this standard is governed by the "Texas Engineering Practice Act". No warranty of any kind is made by TxDOT for any purpose whatsoever. TxDOT assumes no responsibility for the conversion of this standard to other formats or for incorrect results or damages resulting from its use.

DATE: 1/9/2020 4:00:24 PM
FILE: H:\Projects\5103003\Design\Civil\Standards\Retaining Walls\rwstde01.dgn

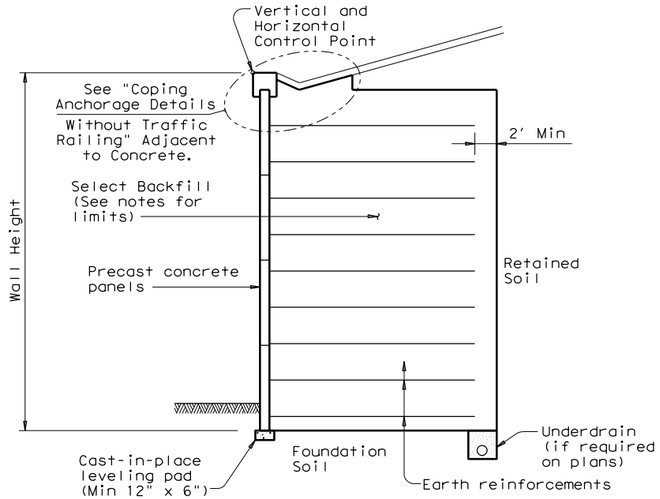

TYPICAL SECTION

(Wall at bottom of slope)

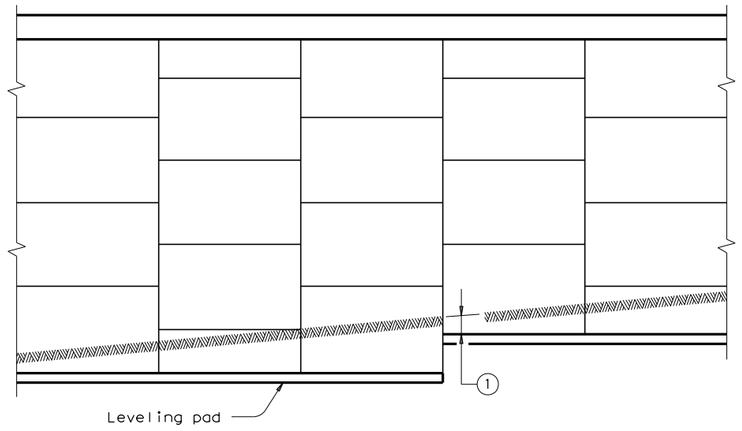

ELEVATION

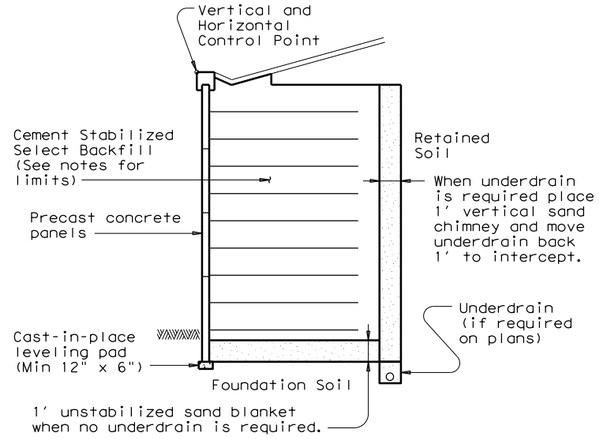

SPECIAL DRAINAGE PROVISIONS

(When cement stabilized backfill is used)

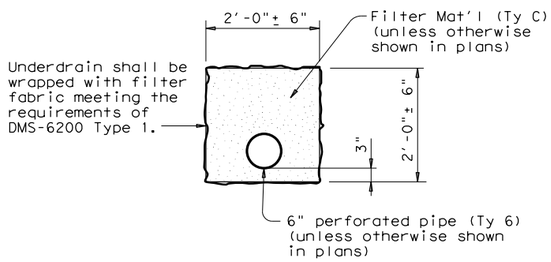

UNDERDRAIN DETAIL

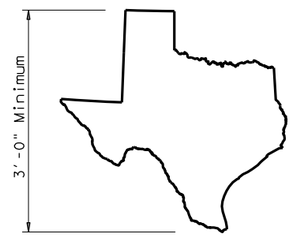

MAP OF TEXAS EMBLEM ②

① Minimum embedment conforming to values given on the RW(MSE)DD standard.

② Map of Texas emblem shall be formed into a wall panel next to each bridge abutment. The exact location of each emblem shall be approved by the Engineer. The cost of forming the emblems will not be paid for directly, but shall be incidental to the Item "Retaining Wall". The map of Texas shall be inset a minimum of ¾" into the face of the panel, and shall receive a smooth finish. The inset area shall be finished in a contrasting color as approved by the Engineer.

Texas Department of Transportation

Bridge Division Standard

MECHANICALLY STABILIZED EARTH RETAINING WALL

RW(MSE)

FILE: rwstde01.dgn	DN: TxDOT	CK: TxDOT	DW: JGD	CK: MJG
©TxDOT March 2010	CONT	SECT	JOB	HIGHWAY
REVISIONS 04-11: Added Table & Corrosion Criteria. 01-13: Wall embed, (WS) table, retained fill, soil strength.				KLEIN RD
	DIST	COUNTY		SHEET NO.
	SAT	GUADALUPE		344

DISCLAIMER:
The use of this standard is governed by the "Texas Engineering Practice Act". No warranty of any kind is made by TxDOT for any purpose whatsoever. TxDOT assumes no responsibility for the conversion of this standard to other formats or for incorrect results or damages resulting from its use.

DATE: 1/9/2020 4:00:25 PM
FILE: H:\Projects\510\30\03\Design\Civil\Standards\Retaining Walls\rwstde01.dgn

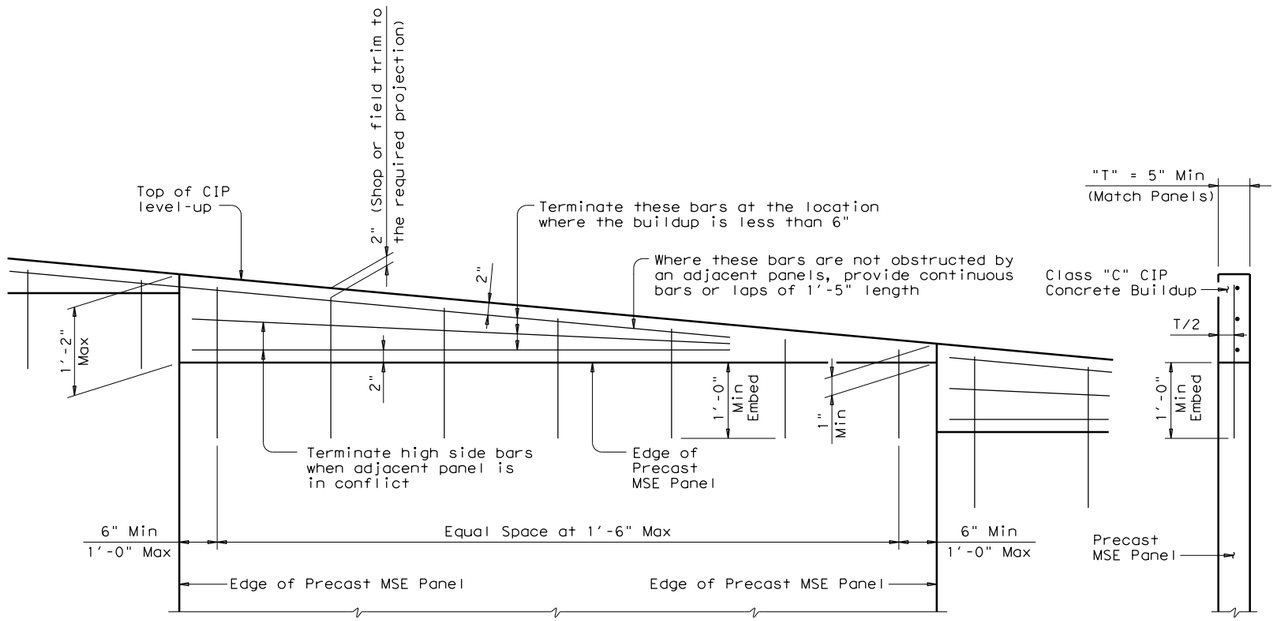

LEVEL UP DETAIL (5)

Provide Grade 60 (#4) Reinforcement

(3) Precast coping shall be anchored to prevent rotation or displacement. Use these details to develop custom anchorage for precast copings. Details shall include coping reinforcement. Concrete flume (if required) shall be paid for separately from Item 423.

(4) Soil design parameter must be based on long term soil strength. Design parameters must be listed on the RW(MSE)DD standard.

(5) Cast vertical bars into the top of panels. At contractor's option vertical bars may be embedded 4" with a Type III Clac C epoxy anchorage system. Follow manufacturer's directions for installing the epoxied vertical bars.

(6)

SELECT BACKFILL UNIT WEIGHT			
Type AS, BS & DS	Unit Weight	Inernal Stability	External Stability
	105 PCF	Pullout	Sliding, Overturning, Eccentricity
	125 PCF	Rupture	Bearing

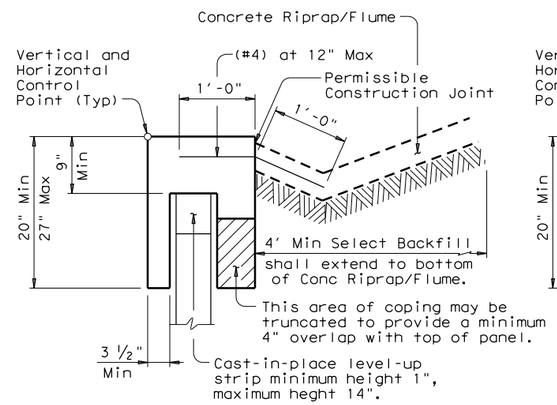

ADJACENT TO CONCRETE
(Excluding Concrete Pavement)

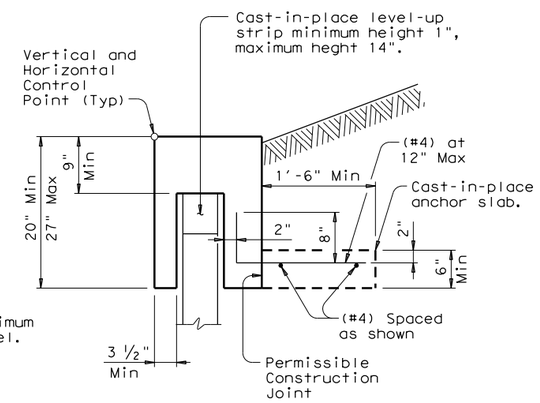

ADJACENT TO SOIL

COPING ANCHORAGE DETAILS WITHOUT TRAFFIC RAILING (3)

DESIGN PARAMETERS:

Design of retaining walls shall be based on the following design parameters unless stated elsewhere in the plans:

Retained Soil	Unit Weight = 125 pcf Ø = (4) C = 0 psf
Foundation Soil	Ø = (4) C = 0 psf
Select Backfill	Unit Weight = See Table (6) Ø = 34 C = 0 psf
Cement Stabilized Select Backfill	Unit Weight = 125 pcf Ø = 45 C = 0 psf

Stress in steel and concrete shall be in accordance with current AASHTO Standard and Interim Specifications. The minimum length of earth reinforcements are as shown on the RW(MSE)DD standard.

STABILITY CRITERIA:

Stability criteria applies to both dry and drawdown analysis.
Factor of safety in sliding along the base of the structure shall be greater than or equal to 1.5.
Factor of safety in overturning shall be greater than or equal to 2.0.
The base pressure resultant shall fall within the middle third of the retaining wall.
The factor of safety against pullout of the earth reinforcements shall be greater than or equal to 1.5 at each level. Pullout resistance shall be determined from test data evaluated at ¾ inch strain.

CORROSION CRITERIA:

The earth reinforcement elements shall be designed to have a minimum design life of 75 years, using current AASHTO corrosion rates.
Stress calculations (rupture) shall be done on the calculated earth reinforcement section remaining after 75 years. Pullout calculations may be based on non-corroded section.

PRECAST COPINGS:

Wall supplier is to maximize lengths of precast coping. Precast coping is to be provided in 10' minimum lengths (typical). To optimize coping lengths at radiuses, end of runs or other wall geometric conditions favorable to shorter coping sections, shorter lengths may be used pending approval by the Engineer. This applies only to coping without railing.

JOINT SEALER:

The joints between coping segments must be sealed in accordance with the DMS-6310 "Joint Sealant's and Fillers", joint sealing material, Class 4. The joint must be sealed 3" below and 6" above the adjoining pavement surface, or as directed by the Engineer. The purpose of the joint sealing is to contain surface drainage and prevent infiltration into the retaining wall backfill.

GENERAL NOTES:

Section and elevation shown is for informational purposes only. Specific geometry is to be determined based on wall layouts and other plan information.
The select backfill specified for use within the mechanically stabilized earth volume shall extend horizontally from the back of the panels to a minimum 2' beyond the end of the earth reinforcements. The select backfill shall extend vertically from the top of the leveling pad or 4" below the lowest earth reinforcement, whichever is lower, to the top of panels.
The uppermost earth reinforcements shall be no more than 3.0' below the top of wall.
The lowest level of earth reinforcements shall be no more than 2.0' above the top of the leveling pad.
Minimum wire size for earth reinforcements shall be W7.0. If different longitudinal and cross wires are used in an earth reinforcement mesh, the smaller wire shall have at least 50% of the cross sectional area of the larger wire.
A maximum of four wire mesh configurations (wire sizes) will be allowed on a project. Each mesh configuration shall have a unique transverse bar spacing, differing from other configurations by a minimum of 3". Earth reinforcement lengths shall be stepped in increments no finer than 12".
Standard precast concrete panels shall have a maximum height of 6', and a maximum surface area of 50 sq ft. Top and bottom panels may exceed these limitations as necessary to achieve required wall grades. Maximum height of any panel shall be 7'-6". Minimum panel thickness shall be 5". Panels shall be arranged to provide offset horizontal joints.
An open joint shall be provided around the perimeter of the concrete panels. The joint configuration shall be such that 1) the filter fabric and/or pad materials are not exposed at the wall face and 2) the design opening is between ⅜" and ¾".
A one-piece corner panel shall be provided for wall angle changes of greater than 30 degrees. Butting of chamfered panels will be allowed for angle changes of 30 degrees or less.
Concrete coping shall be provided along the top of wall, at the vertical steps at bridge backwalls, and at other vertical steps along the top of wall. The joints between all coping segments shall be sealed to prevent infiltration of water into the retaining wall backfill. Sealing shall be in accordance with the DMS-6310 "Joint Sealants and Fillers", using Class 4 joint sealant.
When obstructions (inlets, drilled shafts, piling, etc.) prevent placement of soil reinforcements in their normal locations, provide details and calculations that establish support for the affected panels. Furnish the same earth reinforcement coverage as that required in the absence of the obstruction. For skewed (rotated) earth reinforcements no adjustment in length is needed for skew angles between 1 and 10 degrees. For skew angles greater than 10 degrees adjust the length of earth reinforcement to provide a cosine length of the reinforcement equivalent to the stated design length for the section of wall. Provide calculations that justify any alterations made to the soil reinforcements or modifications to their normal placement. Do not use panels without any soil reinforcements connected to them unless they are connected with galvanized hardware to adjacent panels which do have supporting Soil reinforcements attached to them and as approved by the Engineer.
Reinforced concrete must be Class "C", Precast concrete Class "H", Unreinforced concrete Class "A".
All reinforcing steel must be Grade 60.
Coping and anchor slabs are considered subsidiary to the Item "Retaining Wall".
These details are to be used in conjunction with the retaining wall layout, standard RW(MSE)DD and other applicable standards.

Texas Department of Transportation

Bridge Division Standard

MECHANICALLY STABILIZED EARTH RETAINING WALL

RW(MSE)

FILE: rwstde01.dgn	DN: TxDOT	CK: TxDOT	DW: JGD	CK: MJG
©TxDOT March 2010	CONT	SECT	JOB	HIGHWAY
REVISIONS 04-11: Added Table & Corrosion Criteria. 01-13: Wall embed, (WS) table, retained fill, soil strength.				KLEIN RD
	DIST	COUNTY		SHEET NO.
	SAT	GUADALUPE		345

DISCLAIMER:
The use of this standard is governed by the "Texas Engineering Practice Act". No warranty of any kind is made by TxDOT for any purpose whatsoever. TxDOT assumes no responsibility for the conversion of this standard to other formats or for incorrect results or damages resulting from its use.

DATE: 1/9/2020 4:00:27 PM
FILE: H:\Projects\5103003\Design\Civil\Standards\Retaining Walls\rwstde03-18.dgn

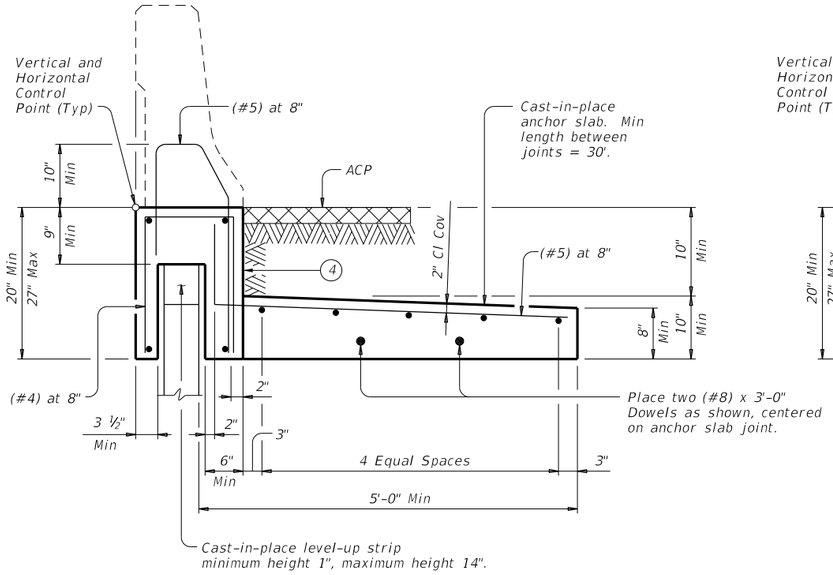

"WIDE BASED" ADJACENT TO ACP

(Showing T551 Rail, other rails listed similar)

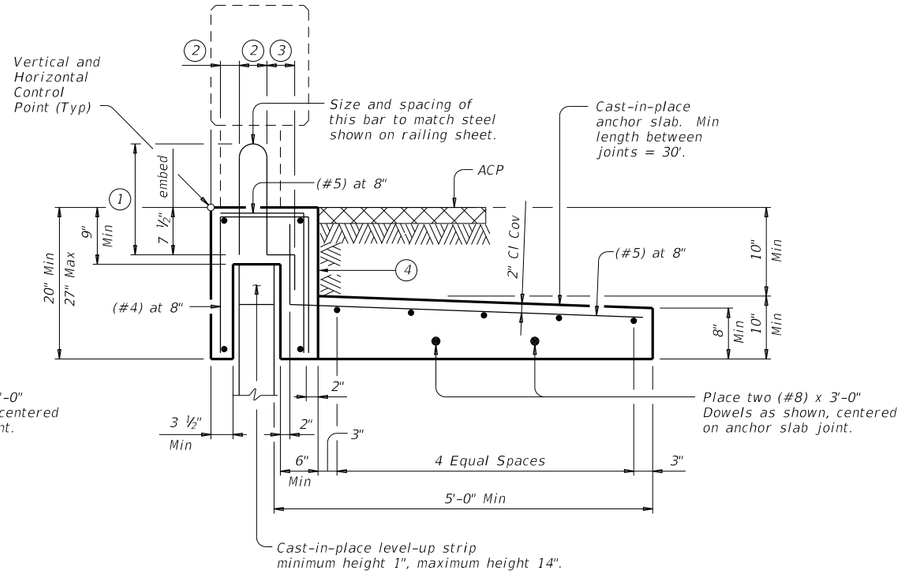

"NARROW BASED" ADJACENT TO ACP

(Showing T223 Rail, other rails listed similar)

Rail Type	Detail	Precasting Rail with Coping Allowed
T1F/T1W/C1W/T2P/C2P	NARROW	NO
T221/C221/T222	NARROW	YES
T223/C223	NARROW	NO
T401/T402/C402	NARROW	NO
T411/C411	NARROW	NO
T551/T552	WIDE	YES
T66	NARROW	NO
SSTR	WIDE	YES

1. Reinforcement length equal to length shown on the appropriate Rail standard plus 1".
2. Match dimension on the appropriate Rail standard.
3. Match dimension on the appropriate Rail standard. Bend end of rail anchorage reinforcing as shown as required to maintain Clear Cover.
4. See "Coping Joint Sealer Details".

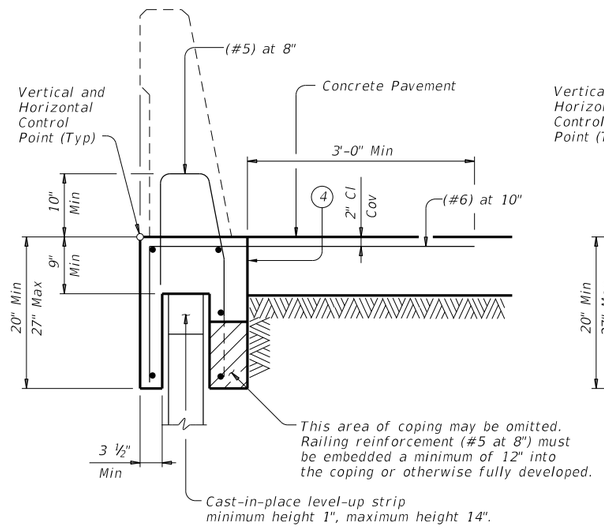

"WIDE BASED" ADJACENT TO CONCRETE PAVEMENT

(Showing SSTR Rail, other rails listed similar)

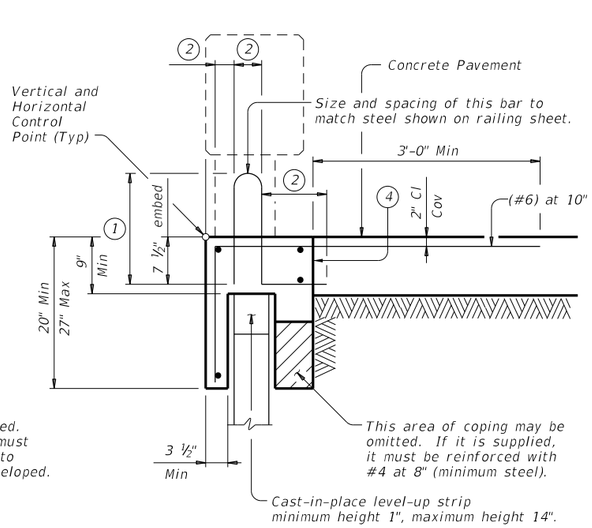

"NARROW BASED" ADJACENT TO CONCRETE PAVEMENT

(Showing T223 Rail, other rails listed similar)

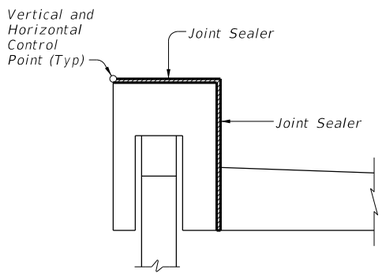

ADJACENT TO ACP

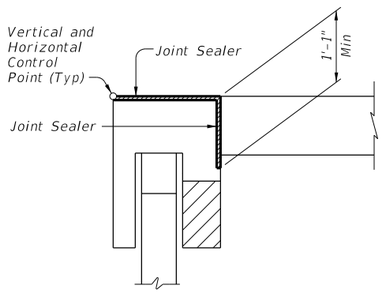

ADJACENT TO CONCRETE PAVEMENT

COPING JOINT SEALER DETAILS

(Reinforcing steel not shown for clarity)

CAST-IN-PLACE COPINGS:

Provide compressible material to isolate precast panel from cast-in-place coping to prevent cracking. Attach compressible material to both sides of precast panel prior to casting concrete for coping.

When cast-in-place coping is anchored to reinforced concrete pavement, a smooth level-up strip must be provided on the top of the precast panels. The purpose of the level-up is to allow the pavement and coping to move longitudinally relative to the wall without causing damage.

Align coping and railing joints with precast panel joints. Optional rail joints are allowed as approved by Engineer. Provide railing construction joints or expansion joints at no greater than 100' spacing.

PRECAST COPINGS:

Provide a smooth level-up strip on top of the precast panels prior to installation of the coping. Shims may be used on top of the level-up strip to facilitate alignment. Total shim thickness not to exceed 1".

Provide precast coping in 10' minimum lengths.

JOINTED CONCRETE PAVEMENT:

When coping is adjacent to and anchored into jointed concrete pavement, the coping joints must coincide with the pavement joints.

JOINT SEALER:

Seal joints between coping segments in accordance with Item 438, "Cleaning and Sealing Joints". Provide Class 4 joint seal. Place sealant flush with coping surface. The purpose of the joint sealing is to reduce surface drainage infiltration into the retaining wall backfill. Sealing coping joint is considered subsidiary to other items.

GENERAL NOTES:

Details on this sheet are to be used in development of specific details for mounting traffic railing on mechanically stabilized earth (MSE) walls.

The specific details proposed must have strengths equivalent to those shown on this sheet. Areas of particular importance are the connection of the coping to the railing, the strength of the vertical coping leg connecting the railing to the anchor slab, and the connection of the coping to the anchor slab or concrete pavement.

Submit shop drawings for the traffic railing foundations to the Engineer in accordance with Item 423 "Retaining Wall". The shop drawings must include bar bending details.

Precasting of railing with the coping will be allowed as noted in the table on this sheet.

The Contractor's attention is directed to the fact that various configurations of precast coping/railing combinations are covered by patent. The contractor must provide for use of these systems in accordance with Article 7.3.

Provide Class C concrete (f'c=3,600 psi).

Provide Grade 60 reinforcing steel.

Provide (#4) longitudinal bars, unless otherwise shown.

Coping and anchor slabs must be considered subsidiary to Item 423 "Retaining Wall". The traffic railing will be paid for by the linear foot for the appropriate railing type.

Texas Department of Transportation

Bridge Division Standard

RETAINING WALL TRAFFIC RAILING FOUNDATIONS

RW(TRF)

FILE: rwstde03-18.dgn	DN: TxDOT	CK: TxDOT	DW: JTR	CK: MPM
©TxDOT March 2010	CONT	SECT	JOB	HIGHWAY
REVISIONS				KLEIN RD
01-13: Precast option with Rails. 03-18: Cast-In-Place Copings, railing construction and expansion joints.	DIST	COUNTY		SHEET NO.
	SAT	GUADALUPE		346

DISCLAIMER:
The use of this standard is governed by the "Texas Engineering Practice Act". No warranty of any kind is made by TxDOT for any purpose whatsoever. TxDOT assumes no responsibility for the conversion of this standard to other formats or for incorrect results or damages resulting from its use.

DATE: 1/9/2020 4:00:29 PM
FILE: H:\Projects\510\30\03\Design\Civil\Standards\Retaining Walls\rwstde12.dgn

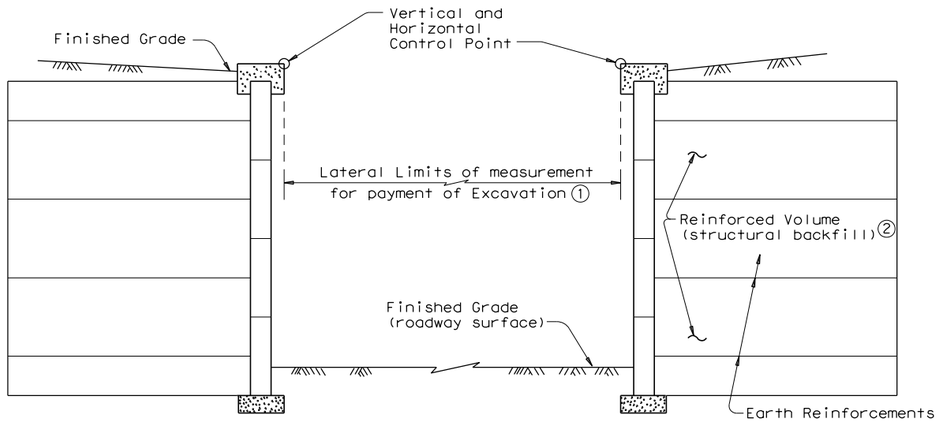

TYPICAL SECTION

Excavation Between MSE Retaining Walls ③

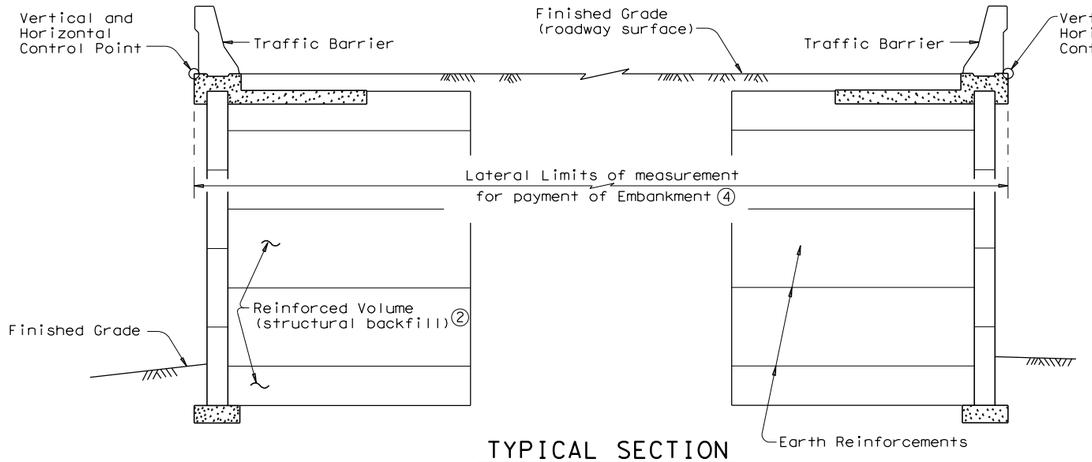

TYPICAL SECTION

Embankment Between MSE Retaining Walls ③

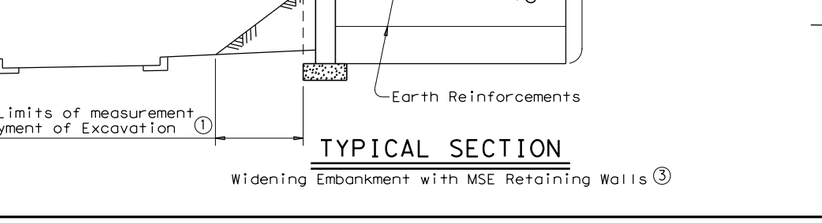

TYPICAL SECTION

Excavation Between Conventional Retaining Walls

① Only the Excavation above the proposed subgrade elevation will be measured for payment.

② Meeting requirements of Retaining-Wall Item.

③ Earthwork measurement with other designs of retaining walls will be made to the outside finished face in the same manner.

④ Only the Embankment above the existing ground line will be measured for payment.

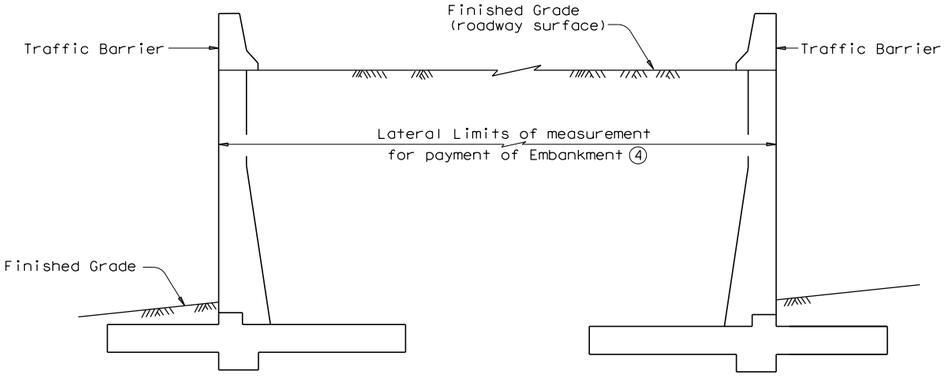

TYPICAL SECTION

Embankment Between Conventional Retaining Walls

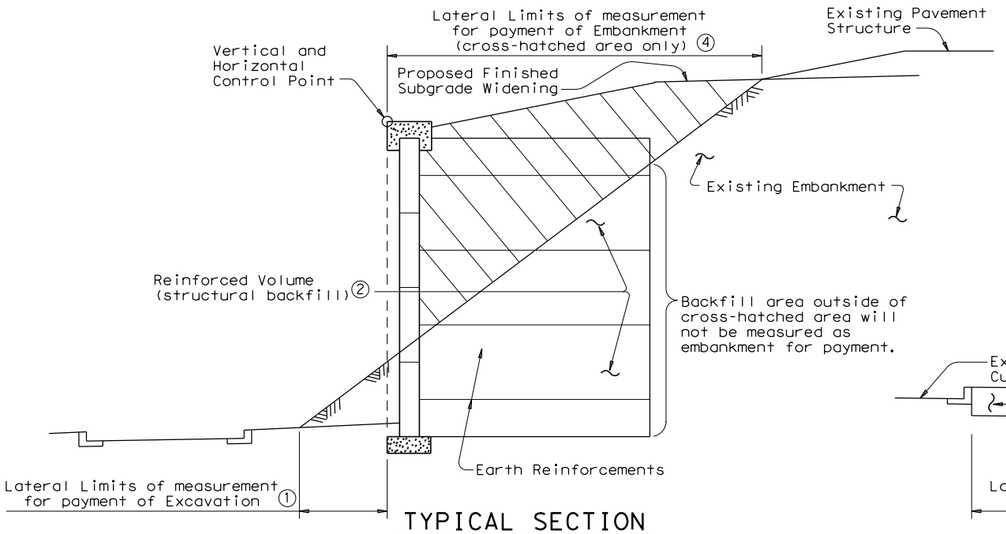

TYPICAL SECTION

Widening Embankment with MSE Retaining Walls ③

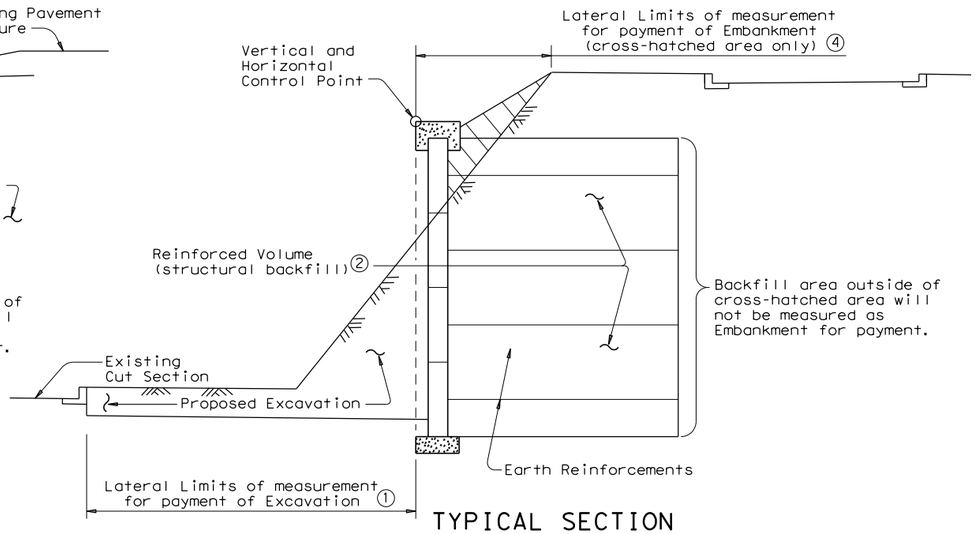

TYPICAL SECTION

Widening Cut Section with MSE Retaining Walls ③

Texas Department of Transportation

Bridge Division Standard

EARTHWORK MEASUREMENT AT RETAINING WALLS

RW(EM)

FILE: rwstde12.dgn	DN: TxDOT	CK: TxDOT	DW: BWH	CK: JMH
©TxDOT March 2010	CONT	SECT	JOB	HIGHWAY
REVISIONS				KLEIN RD
	DIST	COUNTY		SHEET NO.
	SAT	GUADALUPE		347

DISCLAIMER:
The use of this standard is governed by the "Texas Engineering Practice Act". No warranty of any kind is made by TxDOT for any purpose whatsoever. TxDOT assumes no responsibility for the conversion of this standard to other formats or for incorrect results or damages resulting from its use.

DATE: 1/9/2020 4:00:31 PM
FILE: H:\Projects\510\30\03\Design\Civil\Standards\Retaining Walls\rwstde16.dgn

WALL SUMMARY

MSE Retaining Wall	Begin Station (1)	End Station (1)	Retained Soil Friction Angle (2)	Foundation Soil Friction Angle (2)	Ground Improvement (3)	Min Earth Reinforcement Length (4)	Min Wall Embedment (7)	Underdrain Required (5)	Drawdown Analysis (6)	Bench Width (8)
A	10+00.00	11+08.00	PENDING GEOTECHNICAL INVESTIGATION	PENDING GEOTECHNICAL INVESTIGATION	NO	8′	1′	PENDING GEOTECHNICAL INVESTIGATION	PENDING GEOTECHNICAL INVESTIGATION	2′
B	20+01.46	20+76.00	PENDING GEOTECHNICAL INVESTIGATION	PENDING GEOTECHNICAL INVESTIGATION	NO	8′	1′	PENDING GEOTECHNICAL INVESTIGATION	PENDING GEOTECHNICAL INVESTIGATION	2′
C	30+00.00	30+40.98	PENDING GEOTECHNICAL INVESTIGATION	PENDING GEOTECHNICAL INVESTIGATION	NO	8′	1′	PENDING GEOTECHNICAL INVESTIGATION	PENDING GEOTECHNICAL INVESTIGATION	2′
D	40+01.61	40+57.23	PENDING GEOTECHNICAL INVESTIGATION	PENDING GEOTECHNICAL INVESTIGATION	NO	8′	1′	PENDING GEOTECHNICAL INVESTIGATION	PENDING GEOTECHNICAL INVESTIGATION	2′
E	50+01.00	50+64.75	PENDING GEOTECHNICAL INVESTIGATION	PENDING GEOTECHNICAL INVESTIGATION	NO	8′	1′	PENDING GEOTECHNICAL INVESTIGATION	PENDING GEOTECHNICAL INVESTIGATION	2′
F	60+00.00	61+03.00	PENDING GEOTECHNICAL INVESTIGATION	PENDING GEOTECHNICAL INVESTIGATION	NO	8′	1′	PENDING GEOTECHNICAL INVESTIGATION	PENDING GEOTECHNICAL INVESTIGATION	2′
G	70+00.00	74+96.15	PENDING GEOTECHNICAL INVESTIGATION	PENDING GEOTECHNICAL INVESTIGATION	NO	8′	1′	PENDING GEOTECHNICAL INVESTIGATION	PENDING GEOTECHNICAL INVESTIGATION	2′
H	80+00.00	81+17.85	PENDING GEOTECHNICAL INVESTIGATION	PENDING GEOTECHNICAL INVESTIGATION	NO	8′	1′	PENDING GEOTECHNICAL INVESTIGATION	PENDING GEOTECHNICAL INVESTIGATION	2′

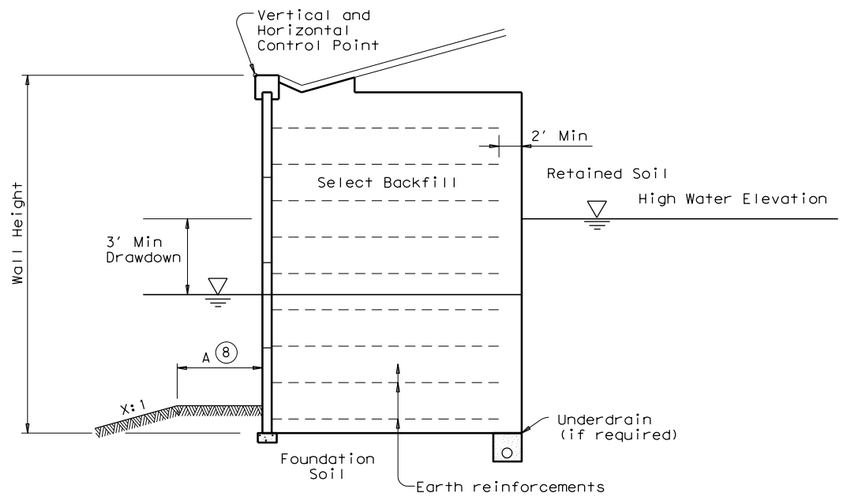

TYPICAL SECTION
(RAPID DRAWDOWN CONDITION)

(1) Indicate limits for which the stated soil design requirements/assumptions are applicable.

(2) Retained and Foundation friction angle listed should be based on local experience or measured/correlated long term strength values.

(3) Indicate if ground improvement is required or not required. If shown as required, refer to Ground Improvement Detail(s) for additional information.

(4) Indicate on table minimum length and length ratio required. The minimum default length of earth reinforcements shall be either 8′-0" or 70% of the wall height, whichever is greater. Wall height and design wall height may differ depending on project geometry and loading conditions. Note: Wall height at bridge abutments is equal to the distance between the top of leveling pad and finished grade at the bridge abutment backwall.

(5) Indicate if underdrain is required or not required.

(6) Indicate if rapid drawdown analysis is required.

(7) Guidance to wall designer of record for determination of minimum wall embedment: Unless noted elsewhere in the plans, the minimum embedment provided from the top of leveling pad to finish grade shall be 1′ for level ground where there is no potential for erosion or future excavation or 2′ for sloping ground (4.0H:1.0V or steeper) or where there is potential for removal of soil in front of the wall.

(8) Horizontal Bench width at base of wall varies. Use the following criteria to establish base width.
A = 2.0′ Min for X $\geq$ 4. or
A = 4.0′ Min for X $\leq$ 4.
Applicable to both drawdown and dry condition.

INTERIM REVIEW
DOCUMENT INCOMPLETE. NOT INTENDED FOR PERMIT, BIDDING OR CONSTRUCTION.
ENGINEER: TYLER PAYNE DUBE
P.E. SERIAL NO: 118612
DATE: 1/9/2020

INTERIM REVIEW
DOCUMENT INCOMPLETE. NOT INTENDED FOR PERMIT, BIDDING OR CONSTRUCTION.
ENGINEER: JOHN A. TYLER
P.E. SERIAL NO: 105193
DATE: 1/9/2020

SPECIAL NOTES:
This sheet is to be filled out by the wall designer of record at time of plan preparation to provide soil strength parameters for the design of the specified walls.
The completed sheet shall be signed, sealed, and dated by a licensed Professional Engineer.

Texas Department of Transportation

Bridge Division Standard

MECHANICALLY STABILIZED EARTH RETAINING WALL DESIGN DATA

RW(MSE)DD

FILE: rwstde16.dgn	DN: TxDOT	CK: MJG	DW: JTR	CK: MJG
©TxDOT January 2013	CONT	SECT	JOB	HIGHWAY
REVISIONS				KLEIN RD
	DIST	COUNTY		SHEET NO.
	SAT	GUADALUPE		348

Plotted on: 1/10/2020

Design Filename: ...\5103003_Klein_XSections.dgn

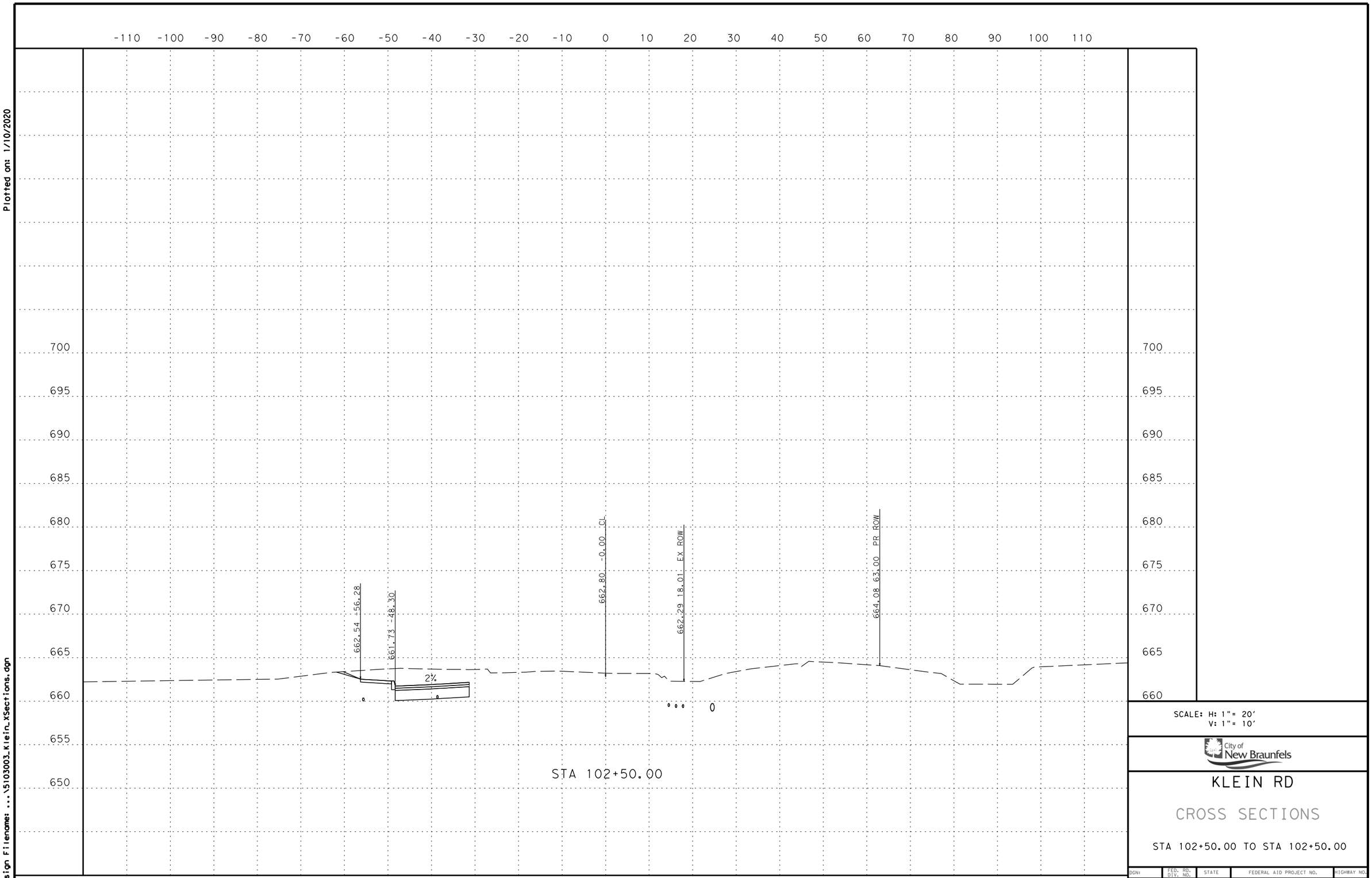

SCALE: H: 1" = 20'
V: 1" = 10'

City of New Braunfels

KLEIN RD

CROSS SECTIONS

STA 102+50.00 TO STA 102+50.00

DGN:	FED. RD. DIV. NO.	STATE	FEDERAL AID PROJECT NO.			HIGHWAY NO.
CHK DGN:	21	TEXAS				KLEIN RD
DWG:	DIST.	COUNTY	CONT. NO.	SECT. NO.	JOB NO.	SHEET NO.
CHK DWG:	SAT	GUADALUPE				

Plotted on: 1/10/2020

Design Filename: ...\5103003_Klein_XSections.dgn

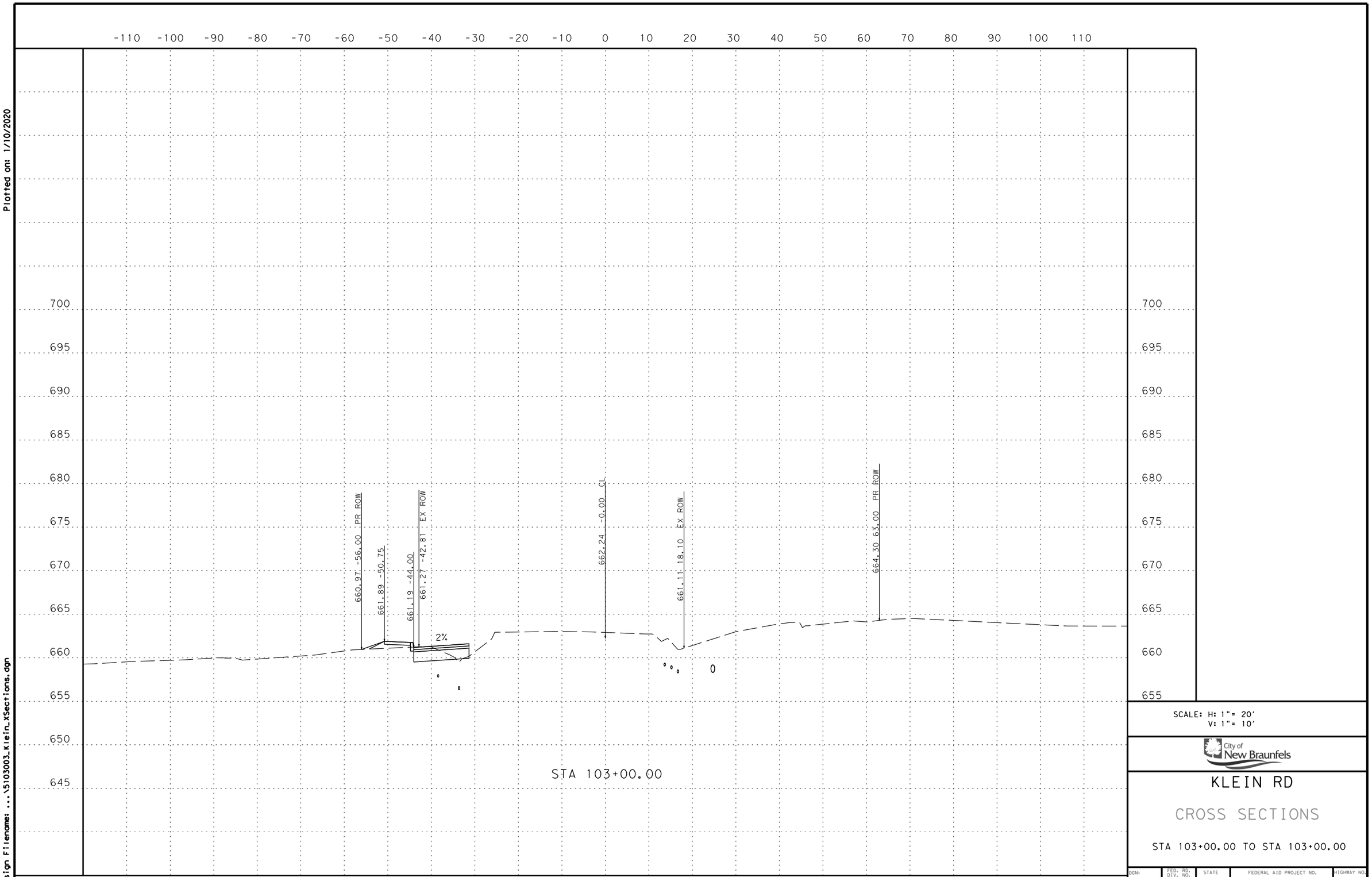

SCALE: H: 1"= 20'
V: 1"= 10'

City of New Braunfels

KLEIN RD

CROSS SECTIONS

STA 103+00.00 TO STA 103+00.00

DGN:	FED. RD. DIV. NO.	STATE	FEDERAL AID PROJECT NO.			HIGHWAY NO.
CHK DGN:	21	TEXAS				KLEIN RD
DWG:	DIST.	COUNTY	CONT. NO.	SECT. NO.	JOB NO.	SHEET NO.
CHK DWG:	SAT	GUADALUPE				

Plotted on: 1/10/2020

Design Filename: ...\5103003_Klein_XSections.dgn

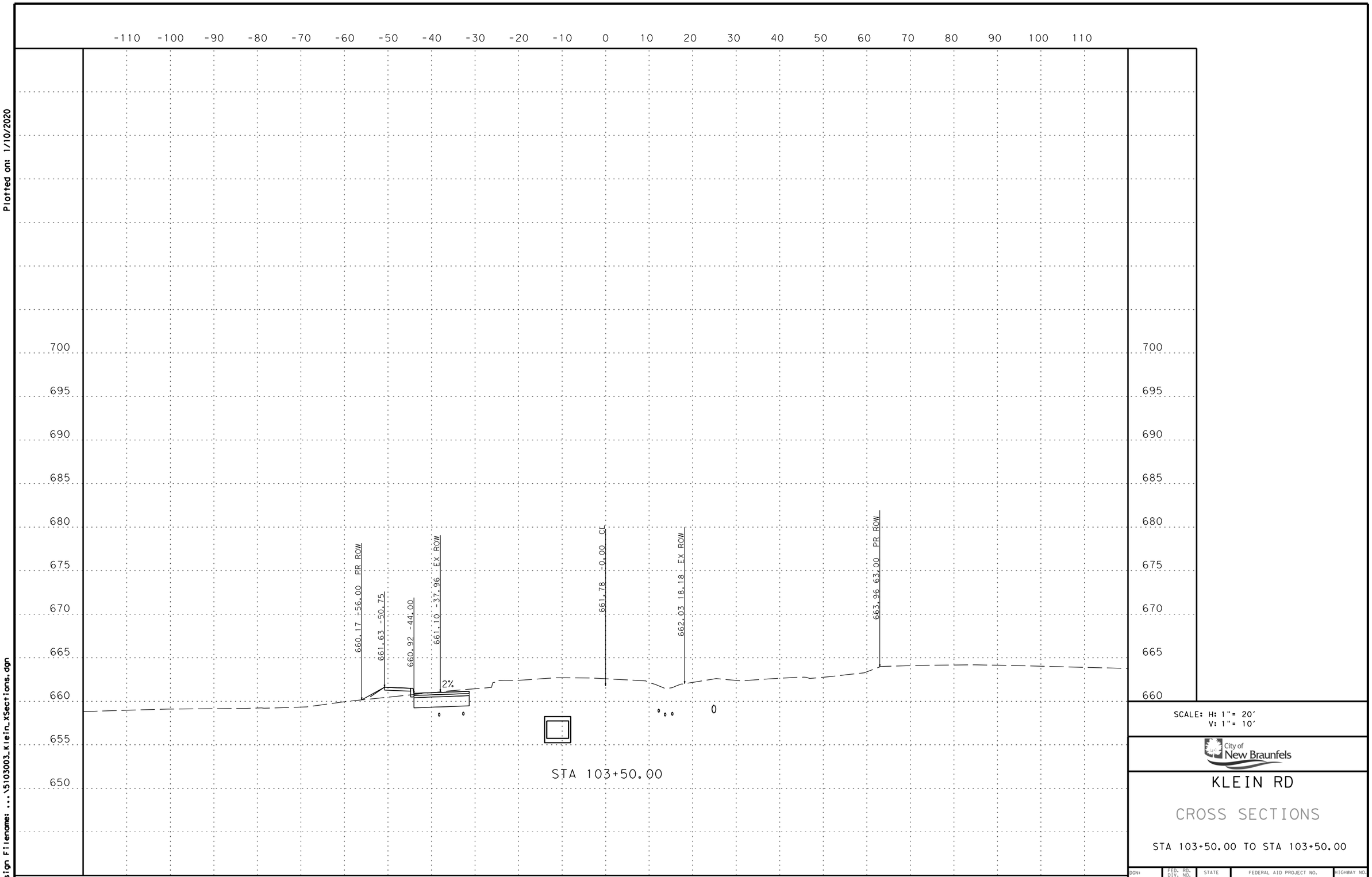

SCALE: H: 1" = 20'
V: 1" = 10'

City of New Braunfels

KLEIN RD

CROSS SECTIONS

STA 103+50.00 TO STA 103+50.00

DGN:	FED. RD. DIV. NO.	STATE	FEDERAL AID PROJECT NO.			HIGHWAY NO.
CHK DGN:	21	TEXAS				KLEIN RD
DWG:	DIST.	COUNTY	CONT. NO.	SECT. NO.	JOB NO.	SHEET NO.
CHK DWG:	SAT	GUADALUPE				

Plotted on: 1/10/2020

Design Filename: ...\5103003_Klein_XSections.dgn

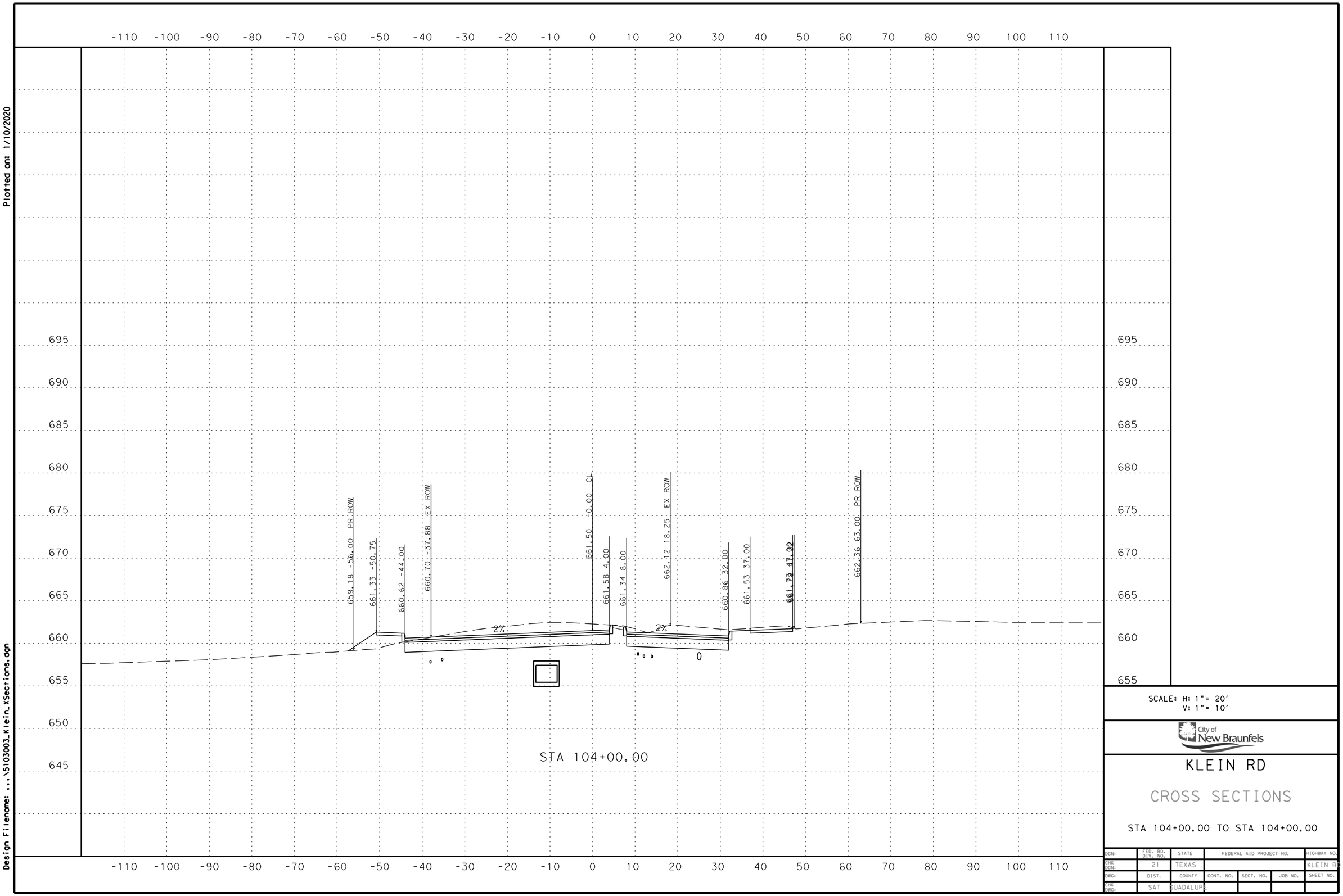

SCALE: H: 1" = 20'
V: 1" = 10'

City of New Braunfels

KLEIN RD

CROSS SECTIONS

STA 104+00.00 TO STA 104+00.00

DGN:	FED. RD. DIV. NO.	STATE	FEDERAL AID PROJECT NO.			HIGHWAY NO.
CHK DGN:	21	TEXAS				KLEIN RD
DWG:	DIST.	COUNTY	CONT. NO.	SECT. NO.	JOB NO.	SHEET NO.
CHK DWG:	SAT	GUADALUPE				

Plotted on: 1/10/2020

Design Filename: ...\5103003_Klein_XSections.dgn

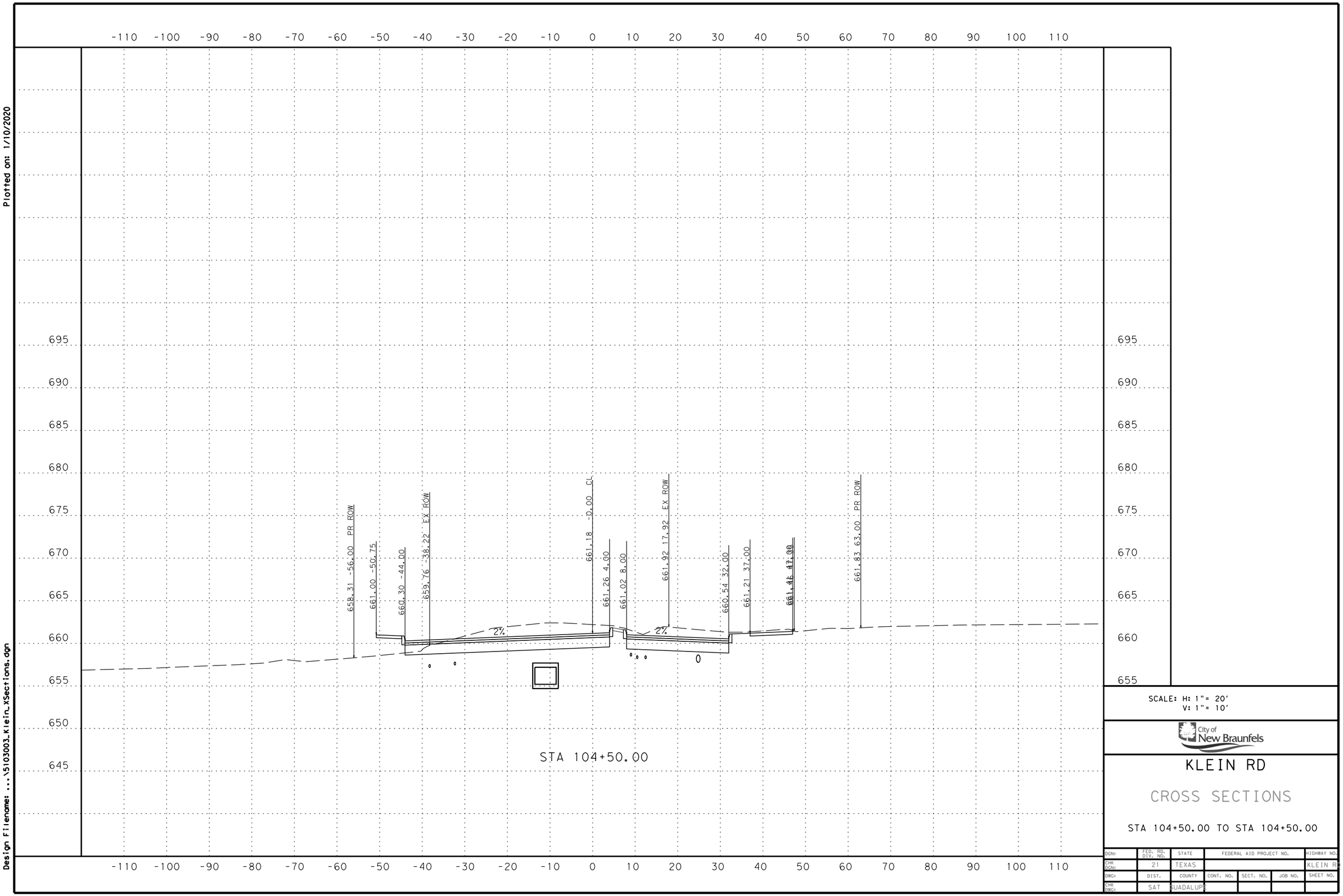

SCALE: H: 1" = 20'
V: 1" = 10'

City of New Braunfels

KLEIN RD

CROSS SECTIONS

STA 104+50.00 TO STA 104+50.00

DGN:	FED. RD. DIV. NO.	STATE	FEDERAL AID PROJECT NO.			HIGHWAY NO.
CHK DGN:	21	TEXAS				KLEIN RD
DWG:	DIST.	COUNTY	CONT. NO.	SECT. NO.	JOB NO.	SHEET NO.
CHK DWG:	SAT	GUADALUPE				

Plotted on: 1/10/2020

Design Filename: ...\5103003_Klein_XSections.dgn

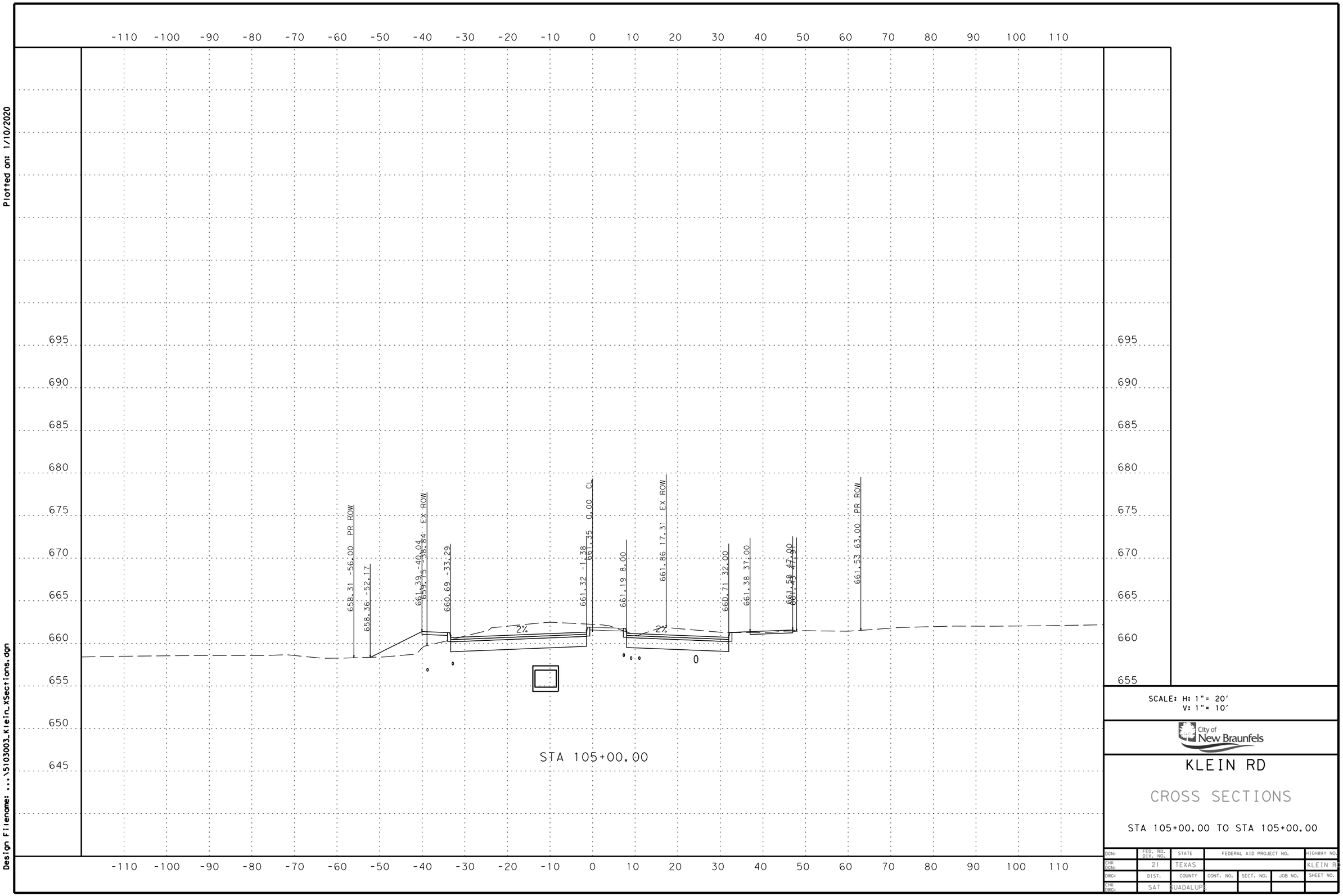

SCALE: H: 1"= 20'
V: 1"= 10'

City of New Braunfels

KLEIN RD

CROSS SECTIONS

STA 105+00.00 TO STA 105+00.00

DGN:	FED. RD. DIV. NO.	STATE	FEDERAL AID PROJECT NO.			HIGHWAY NO.
CHK DGN:	21	TEXAS				KLEIN RD
DWG:	DIST.	COUNTY	CONT. NO.	SECT. NO.	JOB NO.	SHEET NO.
CHK DWG:	SAT	GUADALUPE				

Plotted on: 1/10/2020

Design Filename: ...\5103003_Klein_XSections.dgn

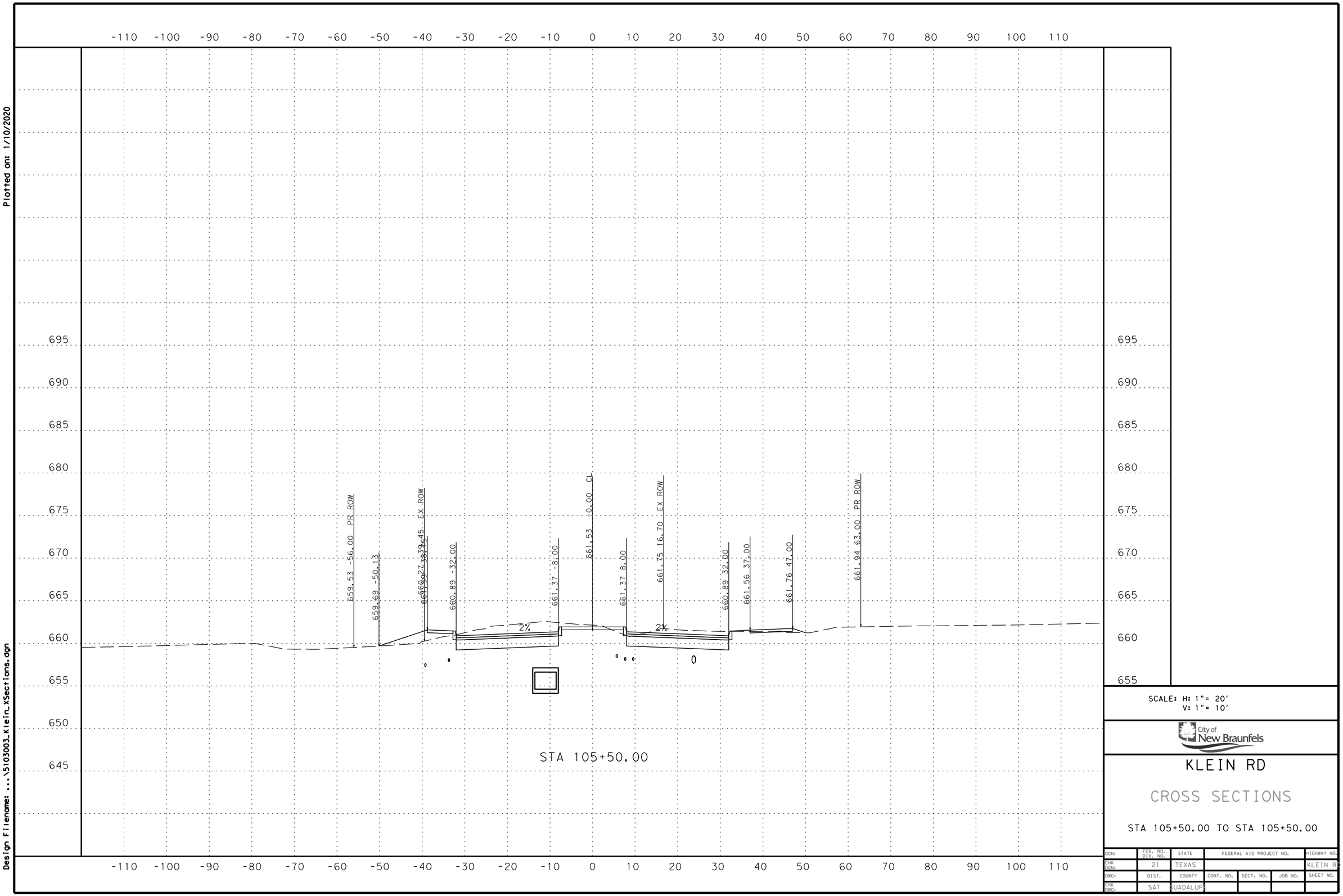

SCALE: H: 1" = 20'
V: 1" = 10'

City of New Braunfels

KLEIN RD

CROSS SECTIONS

STA 105+50.00 TO STA 105+50.00

DGN:	FED. RD. DIV. NO.	STATE	FEDERAL AID PROJECT NO.			HIGHWAY NO.
CHK DGN:	21	TEXAS				KLEIN RD
DWG:	DIST.	COUNTY	CONT. NO.	SECT. NO.	JOB NO.	SHEET NO.
CHK DWG:	SAT	GUADALUPE				

Plotted on: 1/10/2020

Design Filename: ...\5103003_Klein_XSections.dgn

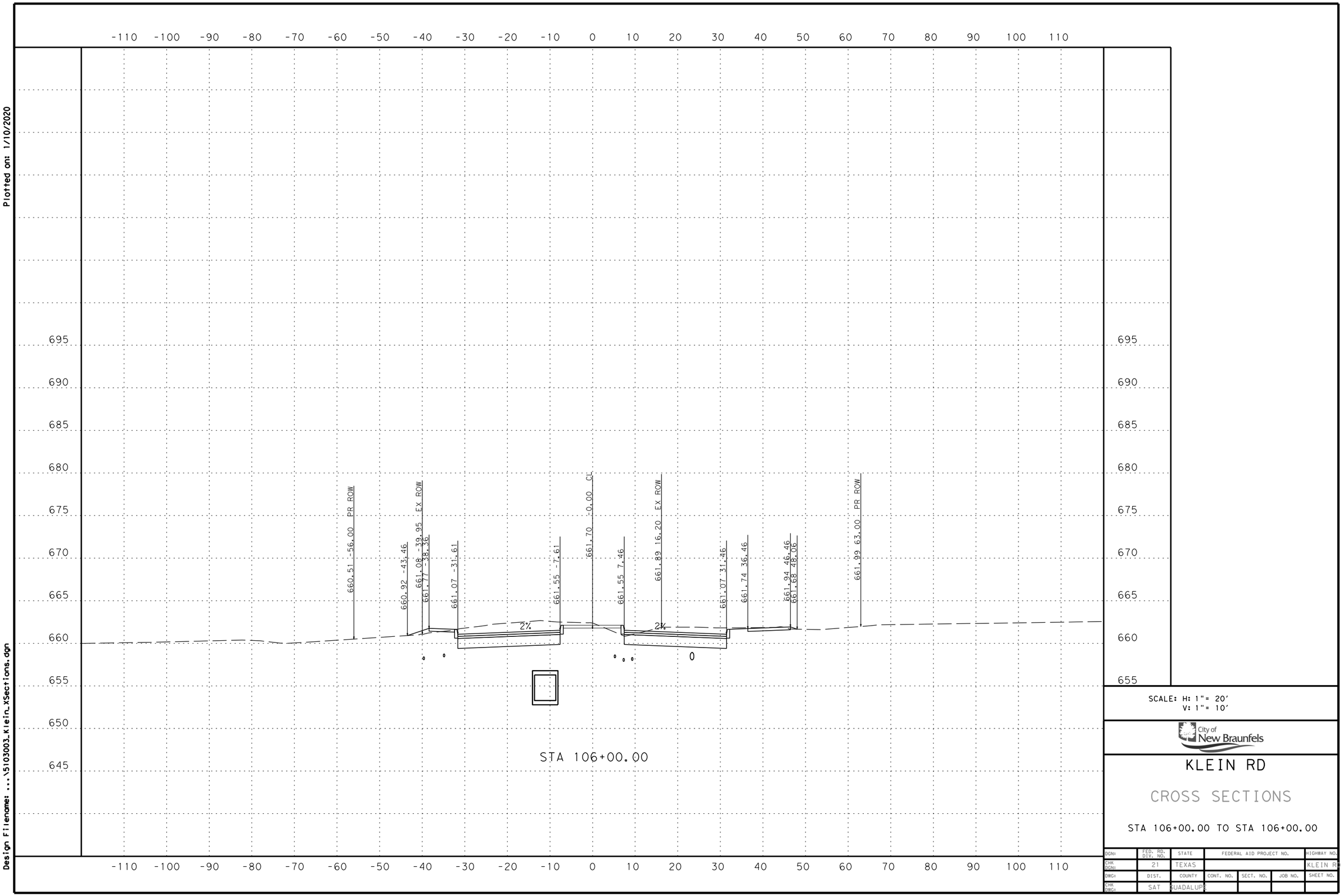

SCALE: H: 1" = 20'
V: 1" = 10'

City of New Braunfels

KLEIN RD

CROSS SECTIONS

STA 106+00.00 TO STA 106+00.00

DGN:	FED. RD. DIV. NO.	STATE	FEDERAL AID PROJECT NO.			HIGHWAY NO.
CHK DGN:	21	TEXAS				KLEIN RD
DWG:	DIST.	COUNTY	CONT. NO.	SECT. NO.	JOB NO.	SHEET NO.
CHK DWG:	SAT	GUADALUPE				

Plotted on: 1/10/2020

Design Filename: ...\5103003_Klein_XSections.dgn

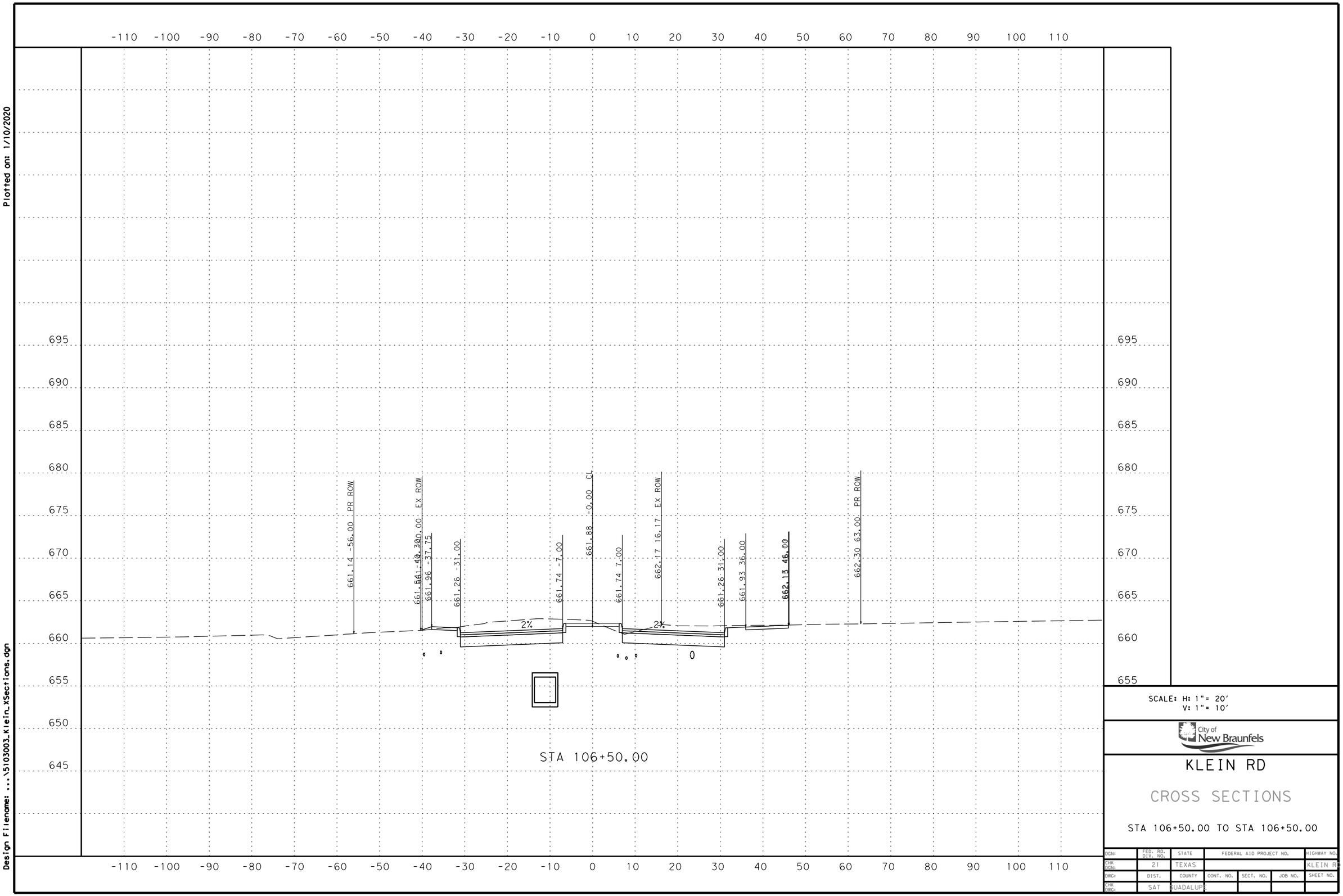

SCALE: H: 1"= 20'
V: 1"= 10'

City of New Braunfels

KLEIN RD

CROSS SECTIONS

STA 106+50.00 TO STA 106+50.00

DGN:	FED. RD. DIV. NO.	STATE	FEDERAL AID PROJECT NO.			HIGHWAY NO.
CHK DGN:	21	TEXAS				KLEIN RD
DWG:	DIST.	COUNTY	CONT. NO.	SECT. NO.	JOB NO.	SHEET NO.
CHK DWG:	SAT	GUADALUPE				

Plotted on: 1/10/2020

Design Filename: ...\5103003_Klein_XSections.dgn

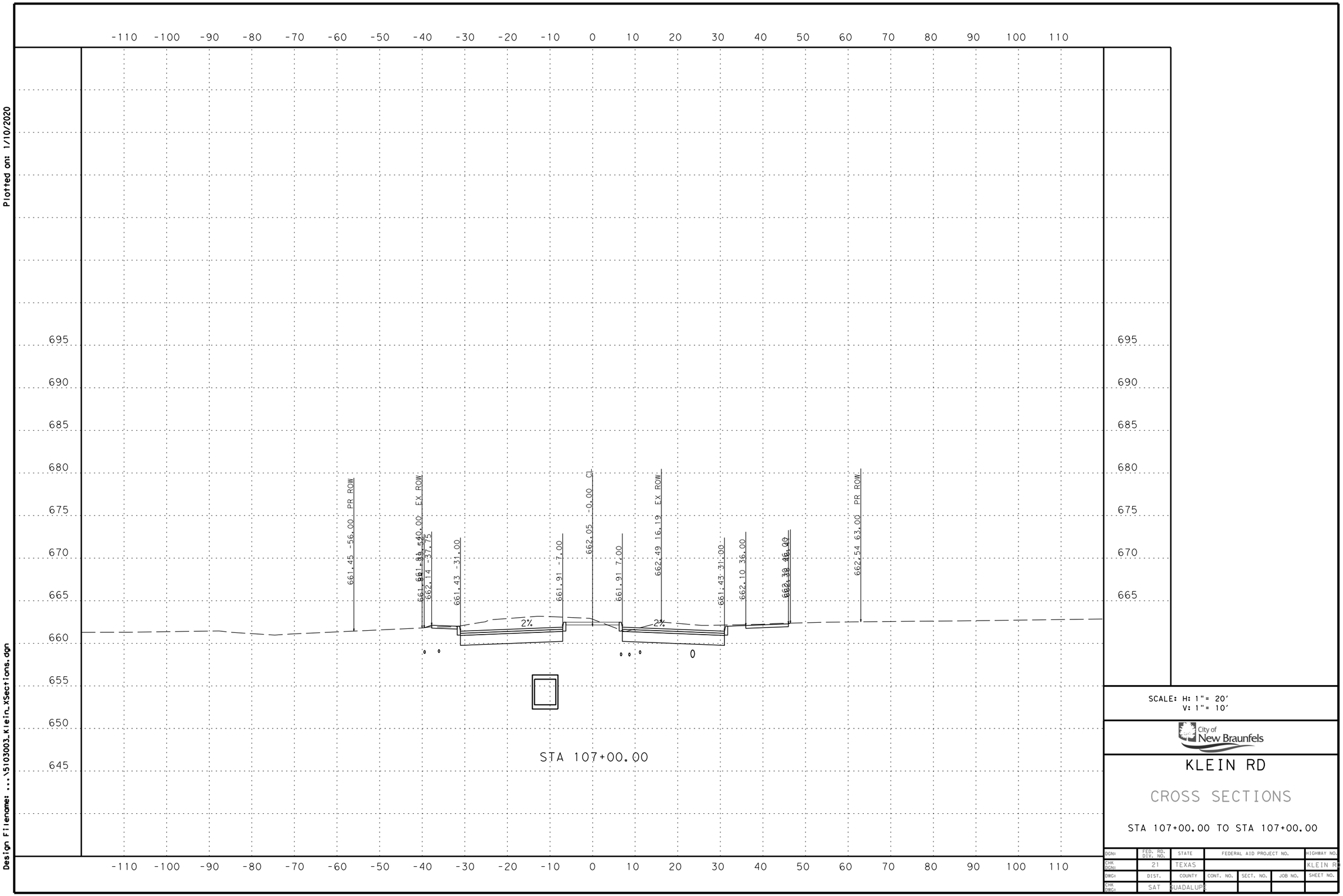

SCALE: H: 1"= 20'
V: 1"= 10'

City of New Braunfels

KLEIN RD

CROSS SECTIONS

STA 107+00.00 TO STA 107+00.00

DGN:	FED. RD. DIV. NO.	STATE	FEDERAL AID PROJECT NO.			HIGHWAY NO.
CHK DGN:	21	TEXAS				KLEIN RD
DWG:	DIST.	COUNTY	CONT. NO.	SECT. NO.	JOB NO.	SHEET NO.
CHK DWG:	SAT	GUADALUPE				

Plotted on: 1/10/2020

Design Filename: ...\5103003_Klein_XSections.dgn

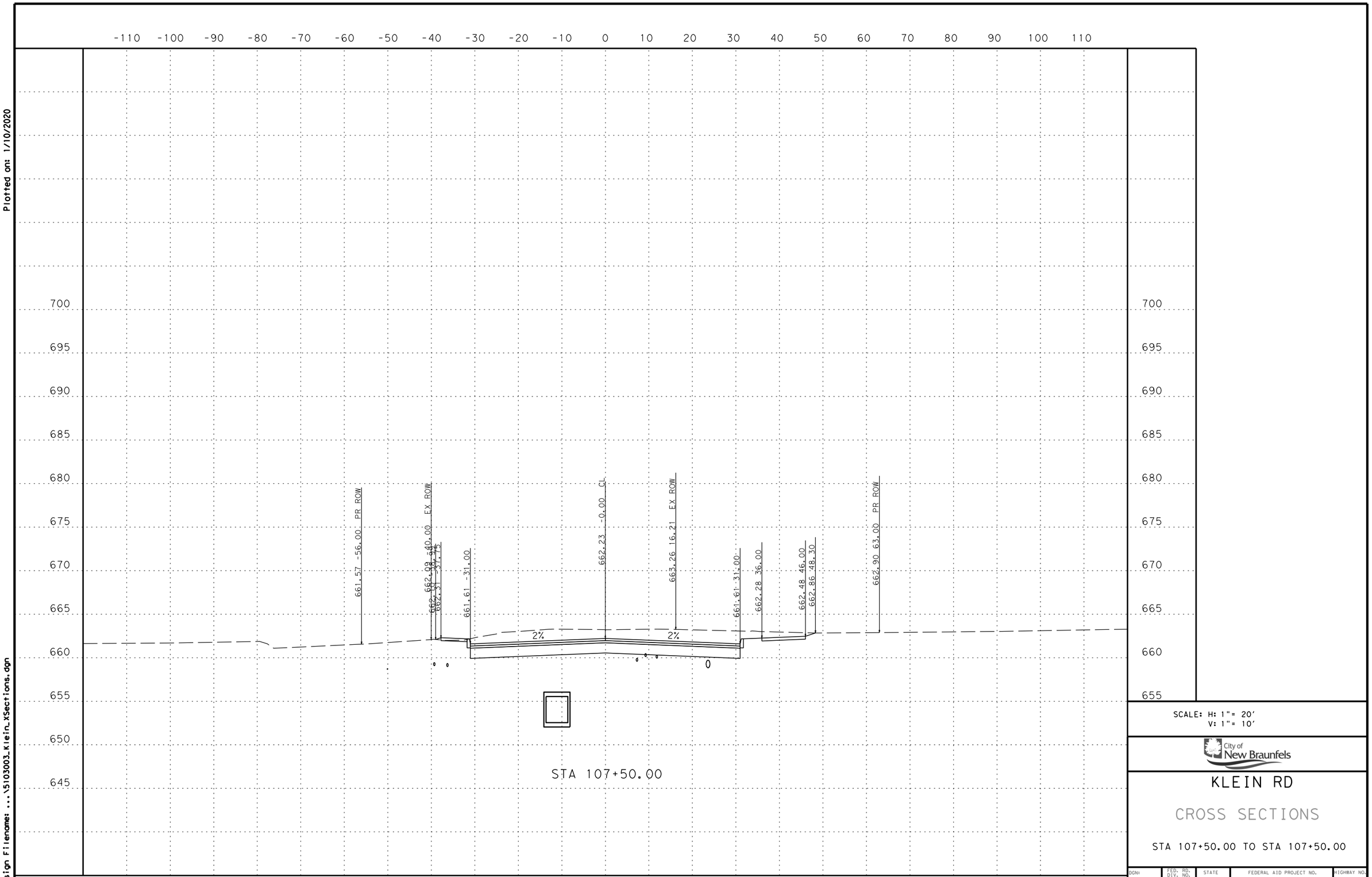

SCALE: H: 1" = 20'
V: 1" = 10'

City of New Braunfels

KLEIN RD

CROSS SECTIONS

STA 107+50.00 TO STA 107+50.00

DGN:	FED. RD. DIV. NO.	STATE	FEDERAL AID PROJECT NO.			HIGHWAY NO.
CHK DGN:	21	TEXAS				KLEIN RD
DWG:	DIST.	COUNTY	CONT. NO.	SECT. NO.	JOB NO.	SHEET NO.
CHK DWG:	SAT	GUADALUPE				

Plotted on: 1/10/2020

Design Filename: ...\5103003_Klein_XSections.dgn

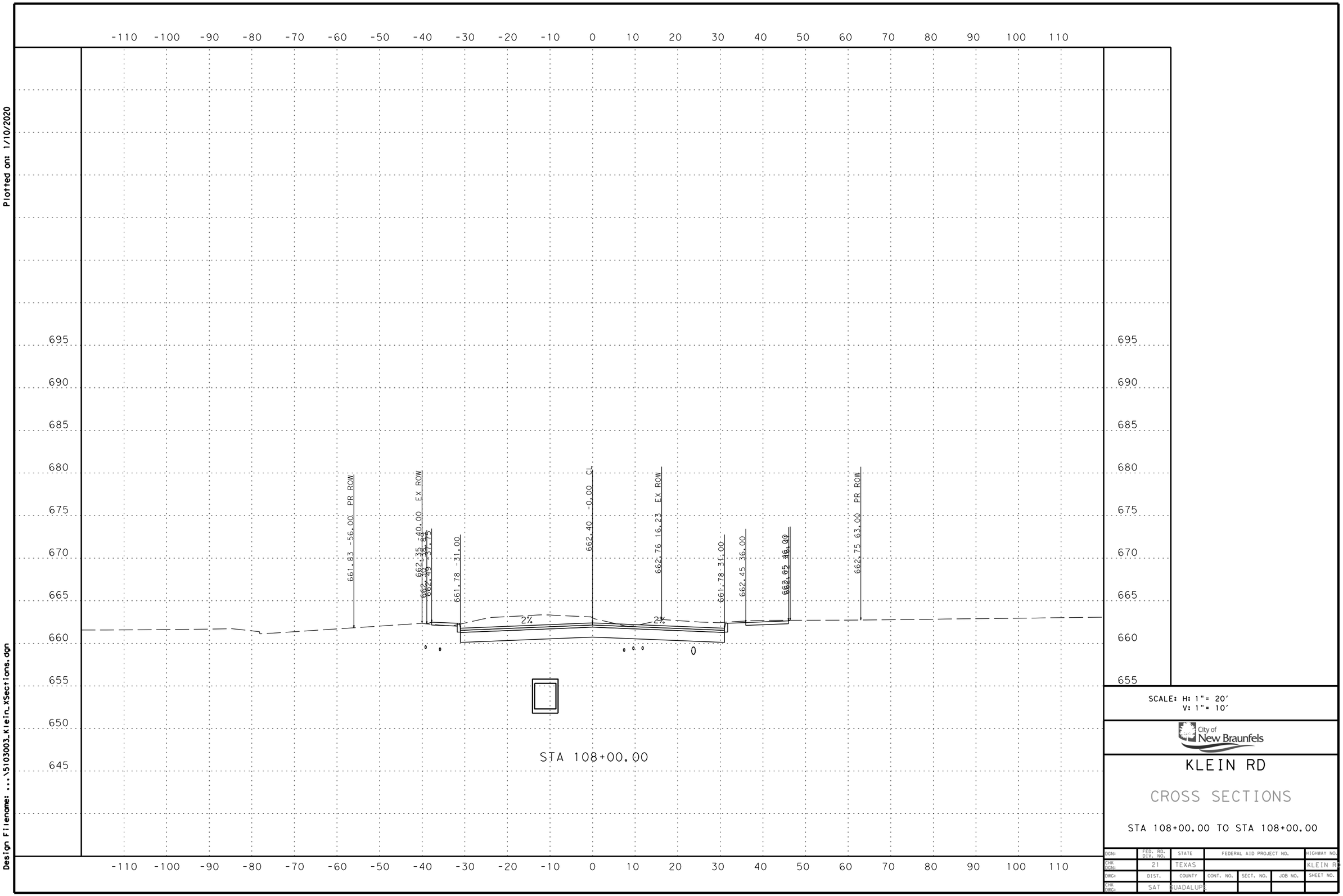

SCALE: H: 1" = 20'
V: 1" = 10'

City of New Braunfels

KLEIN RD

CROSS SECTIONS

STA 108+00.00 TO STA 108+00.00

DGN:	FED. RD. DIV. NO.	STATE	FEDERAL AID PROJECT NO.			HIGHWAY NO.
CHK DGN:	21	TEXAS				KLEIN RD
DWG:	DIST.	COUNTY	CONT. NO.	SECT. NO.	JOB NO.	SHEET NO.
CHK DWG:	SAT	GUADALUPE				

Plotted on: 1/10/2020

Design Filename: ...\5103003_Klein_XSections.dgn

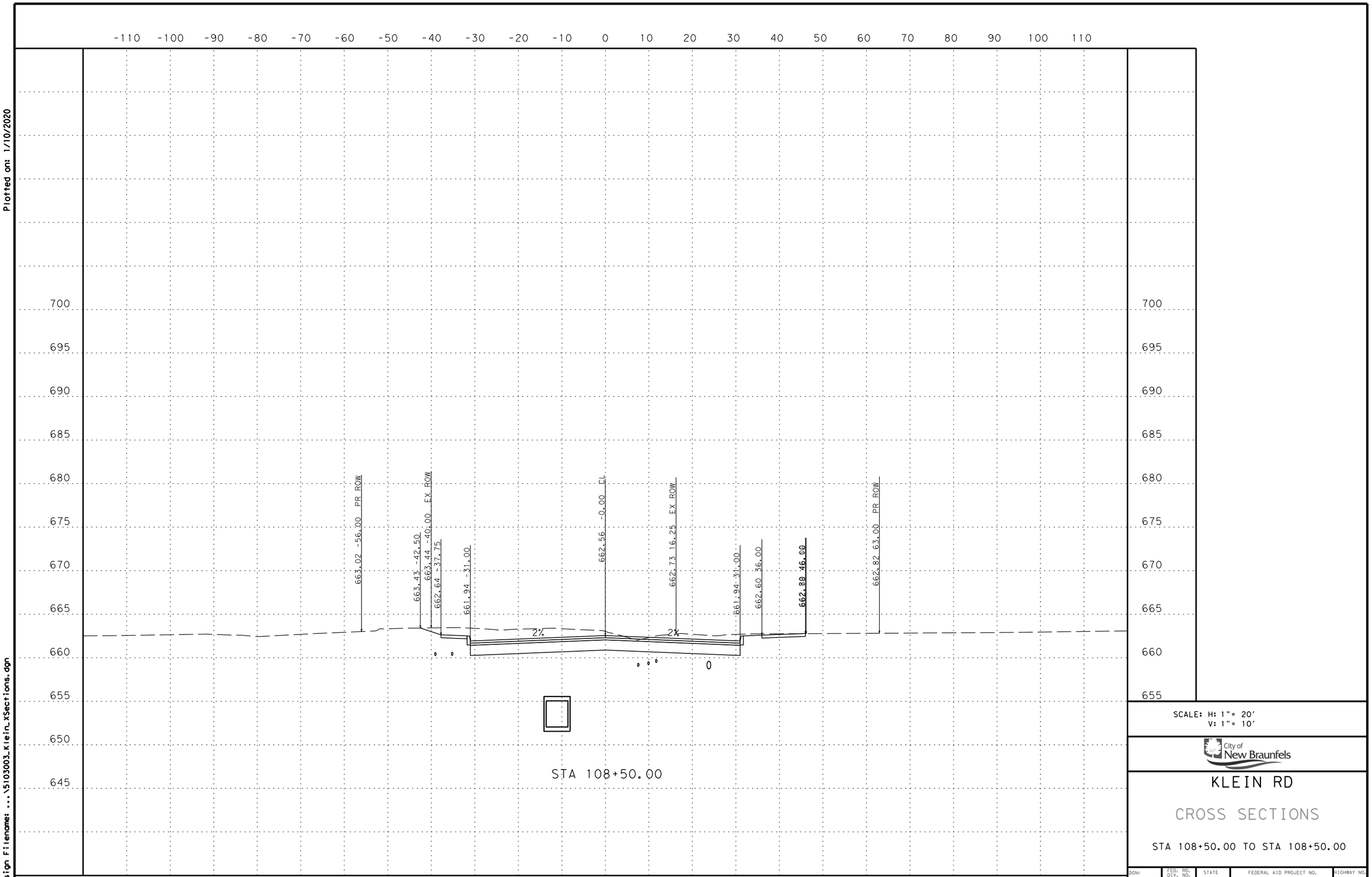

SCALE: H: 1"= 20'
V: 1"= 10'

City of New Braunfels

KLEIN RD

CROSS SECTIONS

STA 108+50.00 TO STA 108+50.00

DGN:	FED. RD. DIV. NO.	STATE	FEDERAL AID PROJECT NO.			HIGHWAY NO.
CHK DGN:	21	TEXAS				KLEIN RD
DWG:	DIST.	COUNTY	CONT. NO.	SECT. NO.	JOB NO.	SHEET NO.
CHK DWG:	SAT	GUADALUPE				

Plotted on: 1/10/2020

Design Filename: ...\5103003_Klein_XSections.dgn

SCALE: H: 1" = 20'
V: 1" = 10'

City of New Braunfels

KLEIN RD

CROSS SECTIONS

STA 109+00.00 TO STA 109+00.00

DGN:	FED. RD. DIV. NO.	STATE	FEDERAL AID PROJECT NO.			HIGHWAY NO.
CHK DGN:	21	TEXAS				KLEIN RD
DWG:	DIST.	COUNTY	CONT. NO.	SECT. NO.	JOB NO.	SHEET NO.
CHK DWG:	SAT	GUADALUPE				

Plotted on: 1/10/2020

Design Filename: ...\5103003_Klein_XSections.dgn

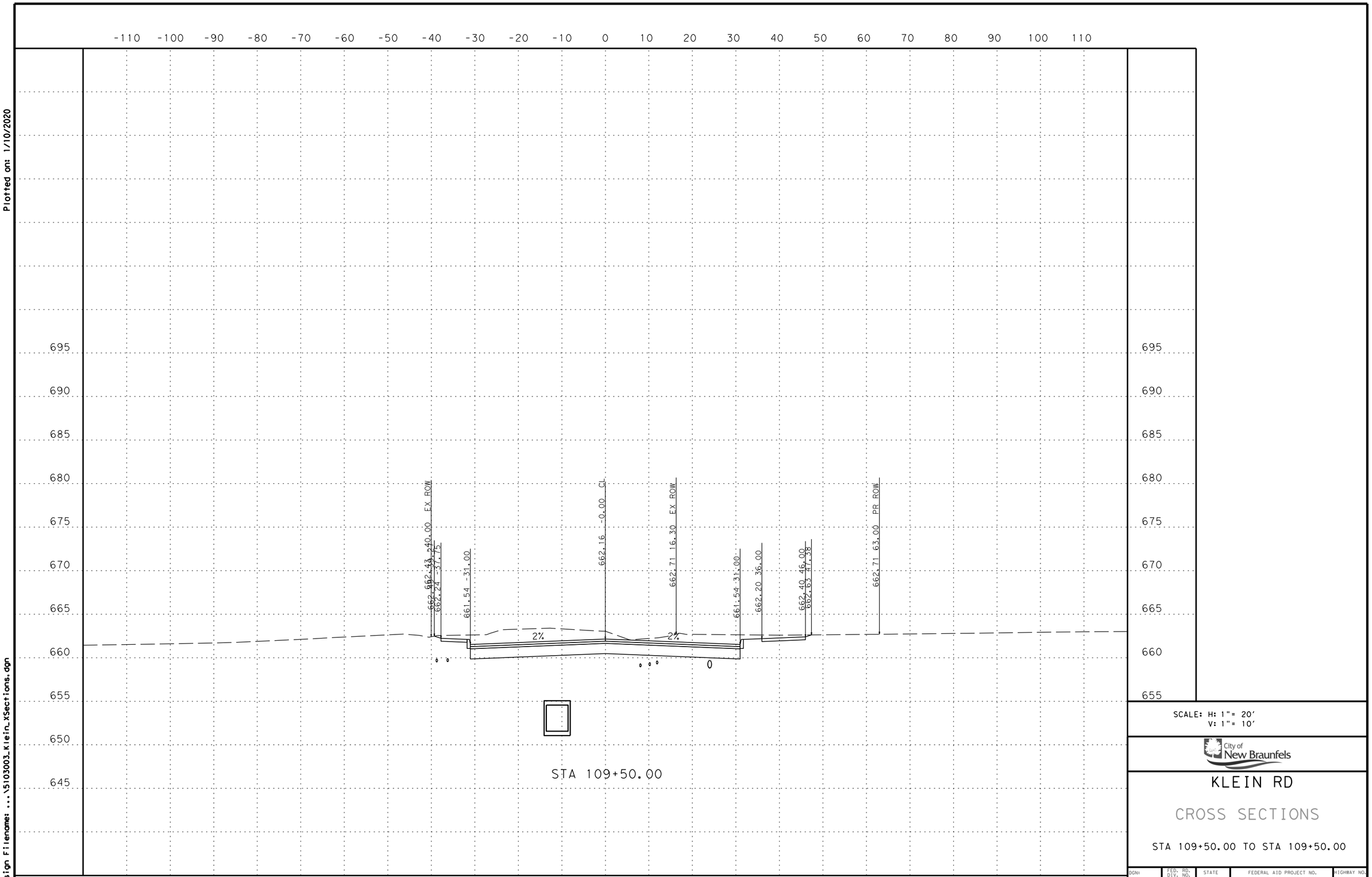

STA 109+50.00

SCALE: H: 1" = 20'
V: 1" = 10'

City of New Braunfels

KLEIN RD

CROSS SECTIONS

STA 109+50.00 TO STA 109+50.00

DGN:	FED. RD. DIV. NO.	STATE	FEDERAL AID PROJECT NO.			HIGHWAY NO.
CHK DGN:	21	TEXAS				KLEIN RD
DWG:	DIST.	COUNTY	CONT. NO.	SECT. NO.	JOB NO.	SHEET NO.
CHK DWG:	SAT	GUADALUPE				

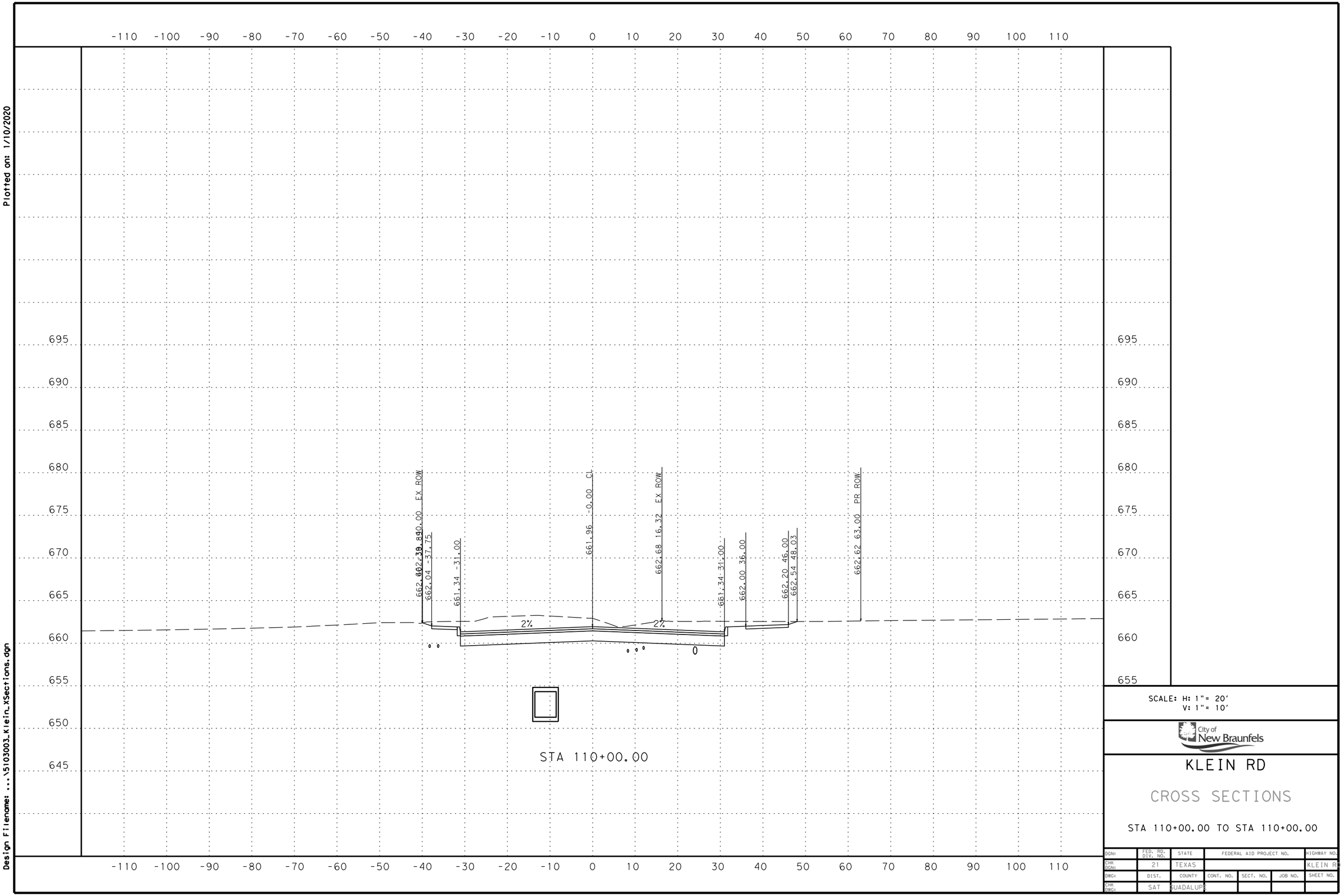

SCALE: H: 1"= 20'
V: 1"= 10'

City of New Braunfels

KLEIN RD

CROSS SECTIONS

STA 110+00.00 TO STA 110+00.00

DGN:	FED. RD. DIV. NO.	STATE	FEDERAL AID PROJECT NO.			HIGHWAY NO.
CHK DGN:	21	TEXAS				KLEIN RD
DWG:	DIST.	COUNTY	CONT. NO.	SECT. NO.	JOB NO.	SHEET NO.
CHK DWG:	SAT	GUADALUPE				

Plotted on: 1/10/2020

Design Filename: ...\5103003_Klein_XSections.dgn

Plotted on: 1/10/2020

Design Filename: ...\5103003_Klein_XSections.dgn

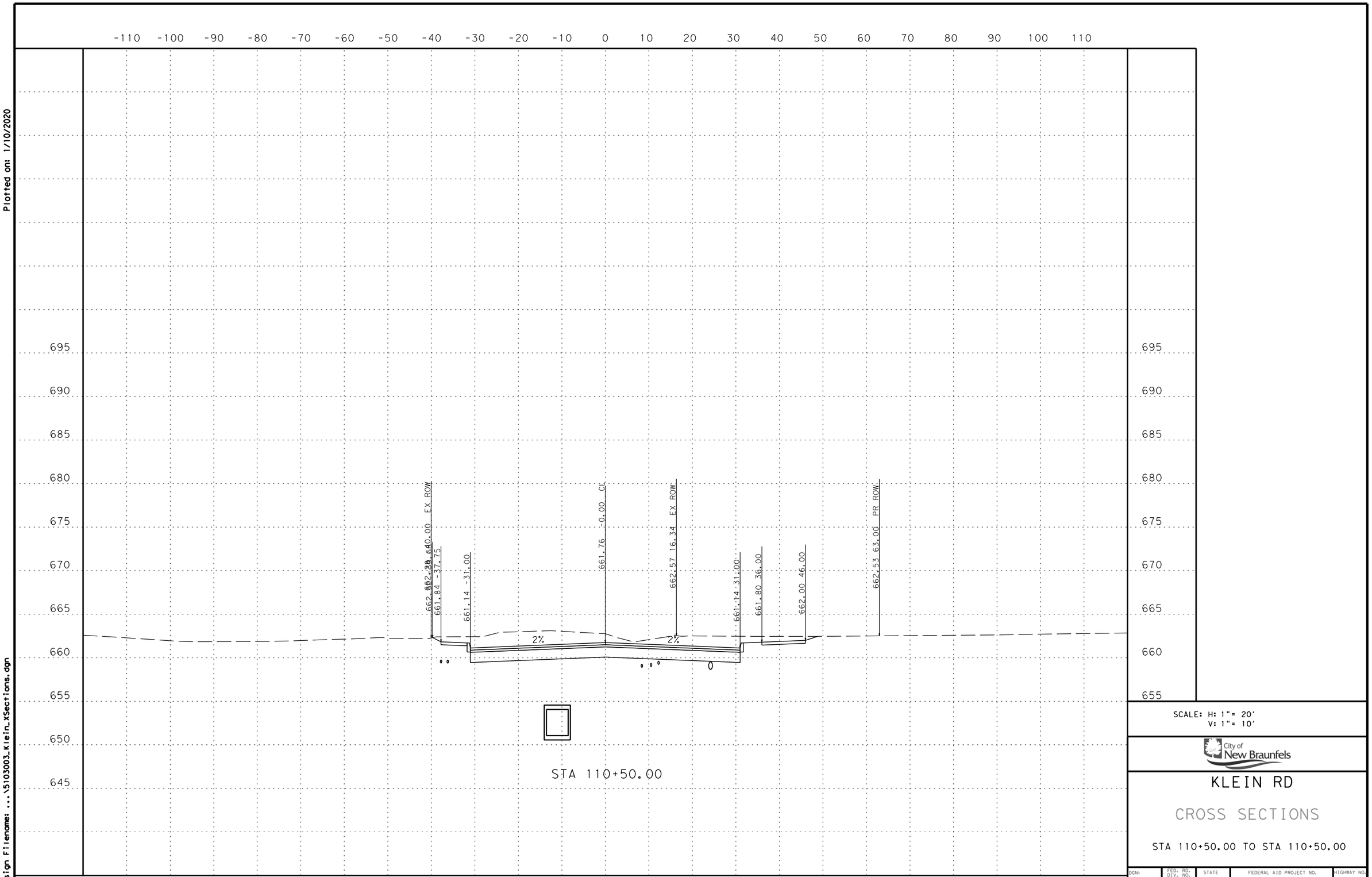

SCALE: H: 1" = 20'
V: 1" = 10'

City of New Braunfels

KLEIN RD

CROSS SECTIONS

STA 110+50.00 TO STA 110+50.00

DGN:	FED. RD. DIV. NO.	STATE	FEDERAL AID PROJECT NO.			HIGHWAY NO.
CHK DGN:	21	TEXAS				KLEIN RD
DWG:	DIST.	COUNTY	CONT. NO.	SECT. NO.	JOB NO.	SHEET NO.
CHK DWG:	SAT	GUADALUPE				

Plotted on: 1/10/2020

Design Filename: ...\5103003_Klein_XSections.dgn

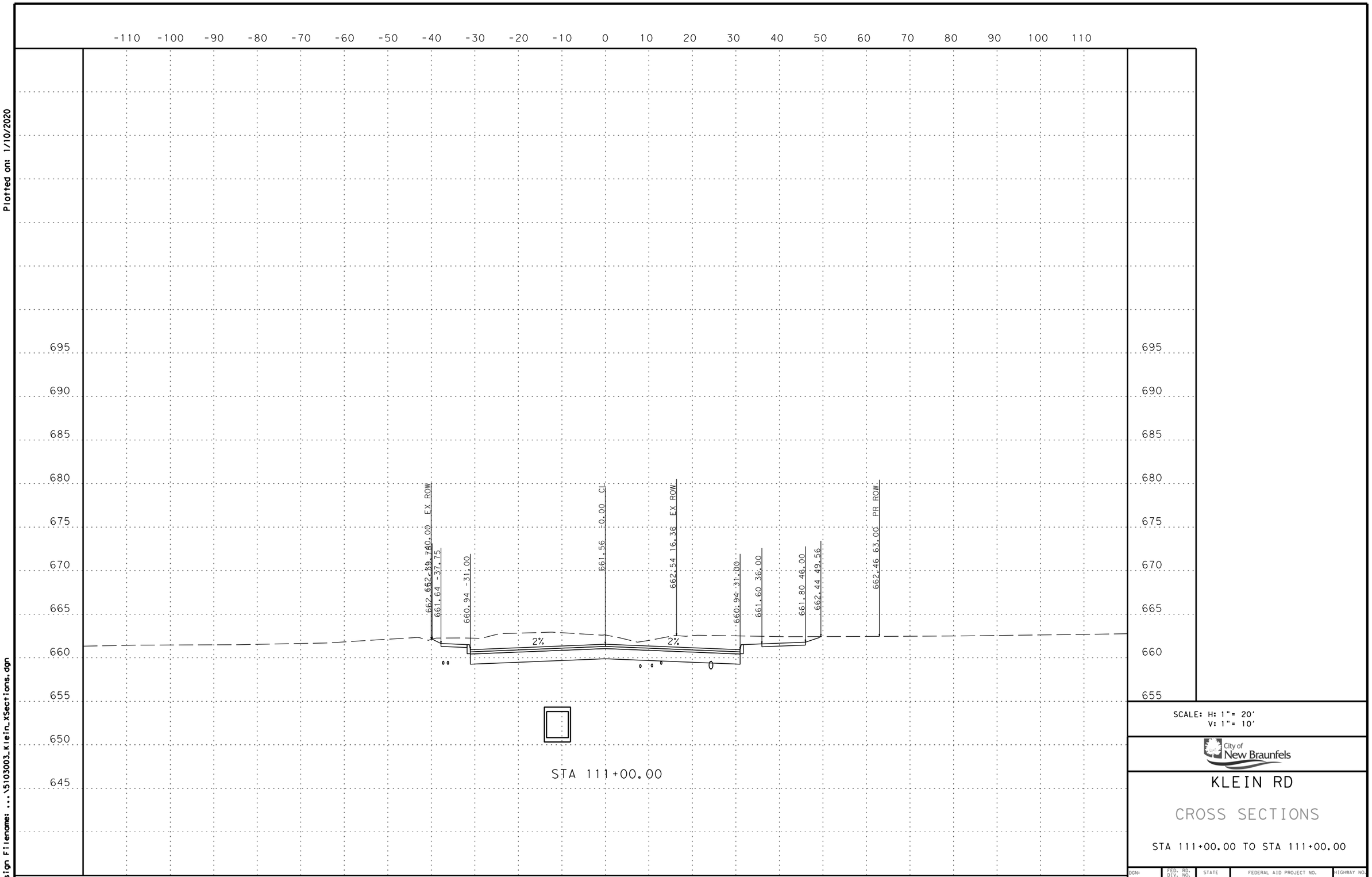

SCALE: H: 1"= 20'
V: 1"= 10'

City of New Braunfels

KLEIN RD

CROSS SECTIONS

STA 111+00.00 TO STA 111+00.00

DGN:	FED. RD. DIV. NO.	STATE	FEDERAL AID PROJECT NO.			HIGHWAY NO.
CHK DGN:	21	TEXAS				KLEIN RD
DWG:	DIST.	COUNTY	CONT. NO.	SECT. NO.	JOB NO.	SHEET NO.
CHK DWG:	SAT	GUADALUPE				

Plotted on: 1/10/2020

Design Filename: ...\5103003_Klein_XSections.dgn

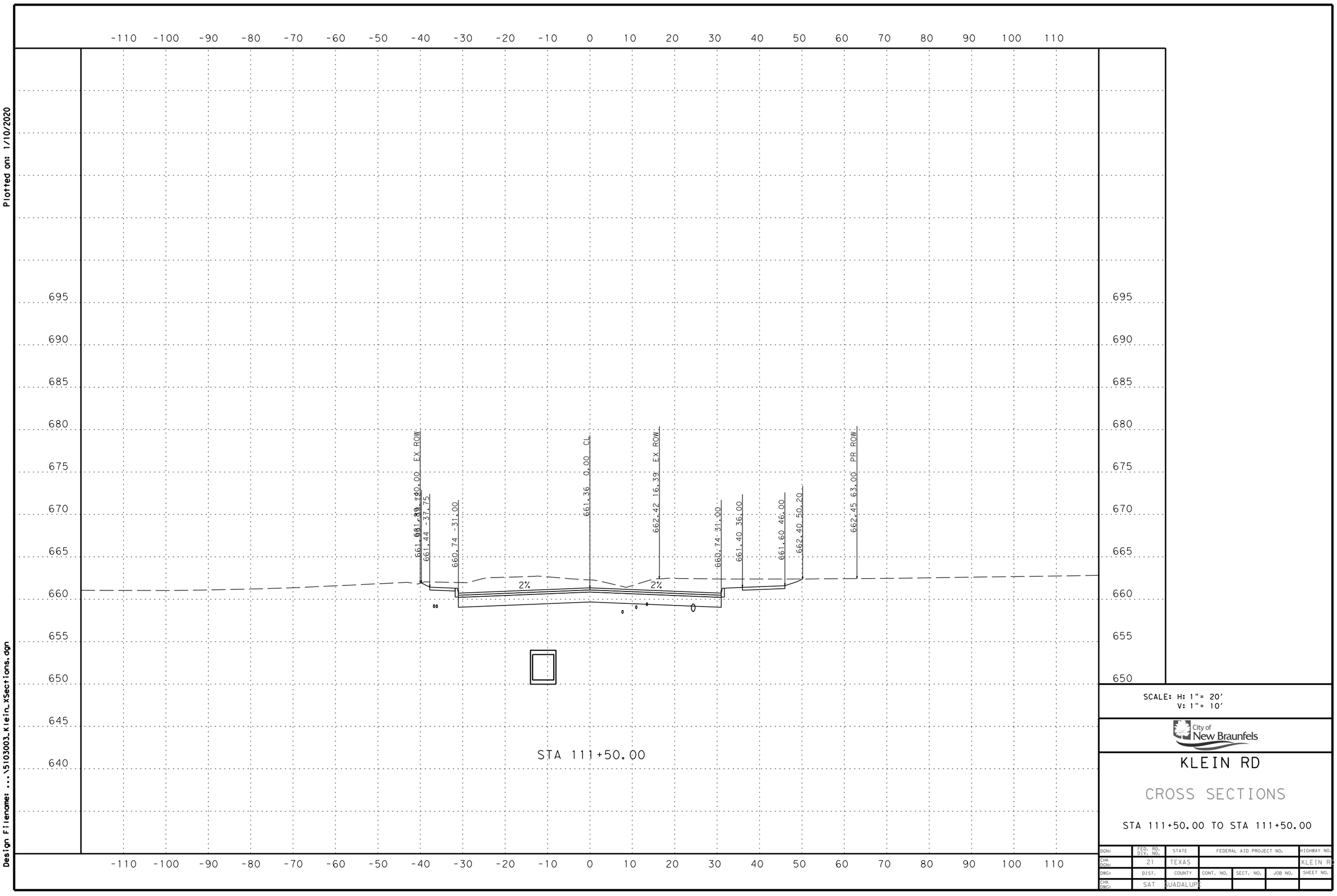

SCALE: H: 1"= 20'
V: 1"= 10'

City of New Braunfels

KLEIN RD

CROSS SECTIONS

STA 111+50.00 TO STA 111+50.00

DGN:	FED. RD. DIV. NO.	STATE	FEDERAL AID PROJECT NO.			HIGHWAY NO.
CHK DGN:	21	TEXAS				KLEIN RD
DWG:	DIST.	COUNTY	CONT. NO.	SECT. NO.	JOB NO.	SHEET NO.
CHK DWG:	SAT	GUADALUPE				

Plotted on: 1/10/2020

Design Filename: ...\5103003_Klein_XSections.dgn

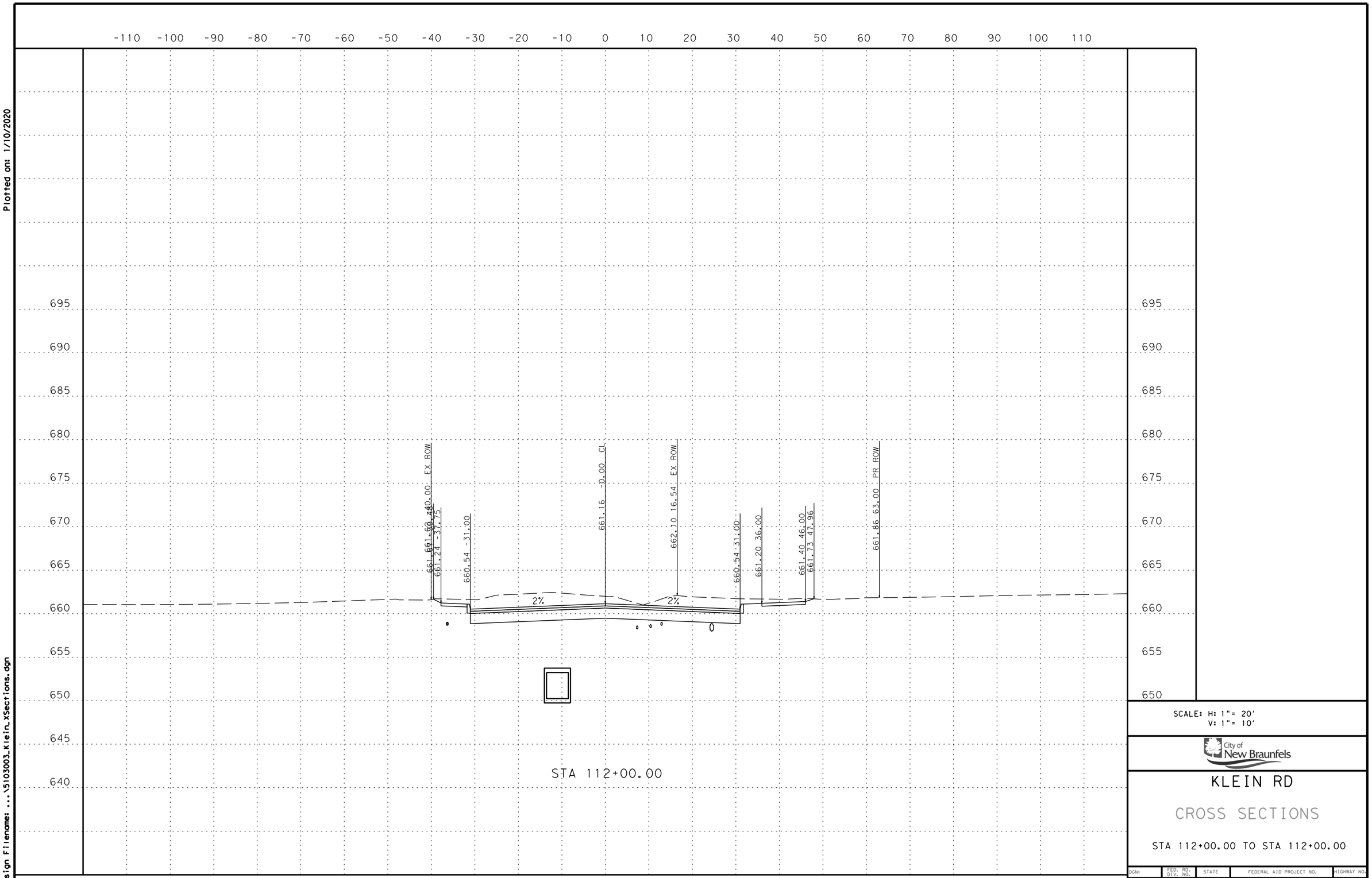

SCALE: H: 1"= 20'
V: 1"= 10'

City of New Braunfels

KLEIN RD

CROSS SECTIONS

STA 112+00.00 TO STA 112+00.00

DGN:	FED. RD. DIV. NO.	STATE	FEDERAL AID PROJECT NO.			HIGHWAY NO.
CHK DGN:	21	TEXAS				KLEIN RD
DWG:	DIST.	COUNTY	CONT. NO.	SECT. NO.	JOB NO.	SHEET NO.
CHK DWG:	SAT	GUADALUPE				

Plotted on: 1/10/2020

Design Filename: ...\5103003_Klein_XSections.dgn

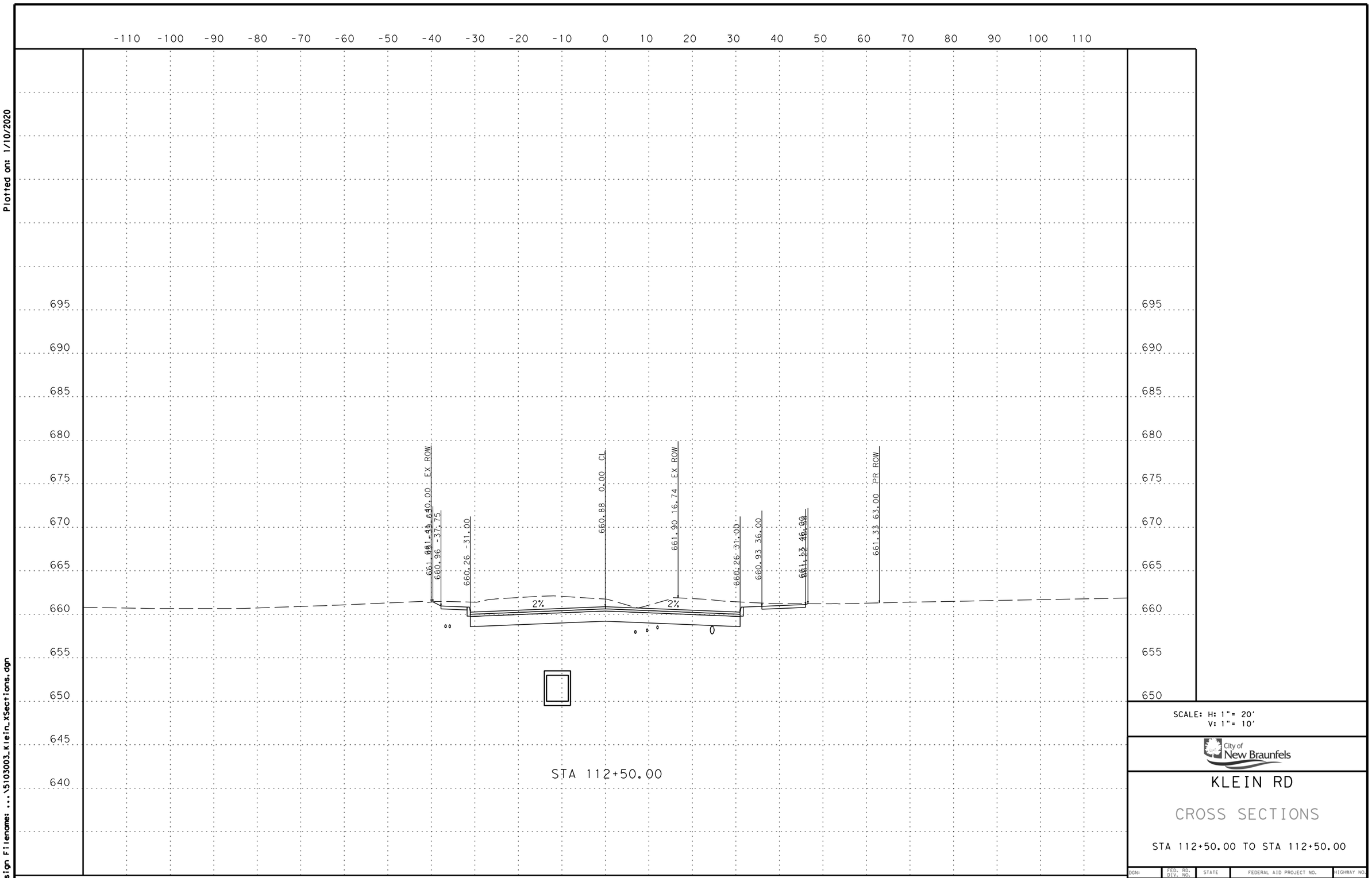

SCALE: H: 1"= 20'
V: 1"= 10'

City of New Braunfels

KLEIN RD

CROSS SECTIONS

STA 112+50.00 TO STA 112+50.00

DGN:	FED. RD. DIV. NO.	STATE	FEDERAL AID PROJECT NO.			HIGHWAY NO.
CHK DGN:	21	TEXAS				KLEIN RD
DWG:	DIST.	COUNTY	CONT. NO.	SECT. NO.	JOB NO.	SHEET NO.
CHK DWG:	SAT	GUADALUPE				

Plotted on: 1/10/2020

Design Filename: ...\5103003_Klein_XSections.dgn

SCALE: H: 1"= 20'
V: 1"= 10'

City of New Braunfels

KLEIN RD

CROSS SECTIONS

STA 113+00.00 TO STA 113+00.00

DGN:	FED. RD. DIV. NO.	STATE	FEDERAL AID PROJECT NO.			HIGHWAY NO.
CHK DGN:	21	TEXAS				KLEIN RD
DWG:	DIST.	COUNTY	CONT. NO.	SECT. NO.	JOB NO.	SHEET NO.
CHK DWG:	SAT	GUADALUPE				

Plotted on: 1/10/2020

Design Filename: ...\5103003_Klein_XSections.dgn

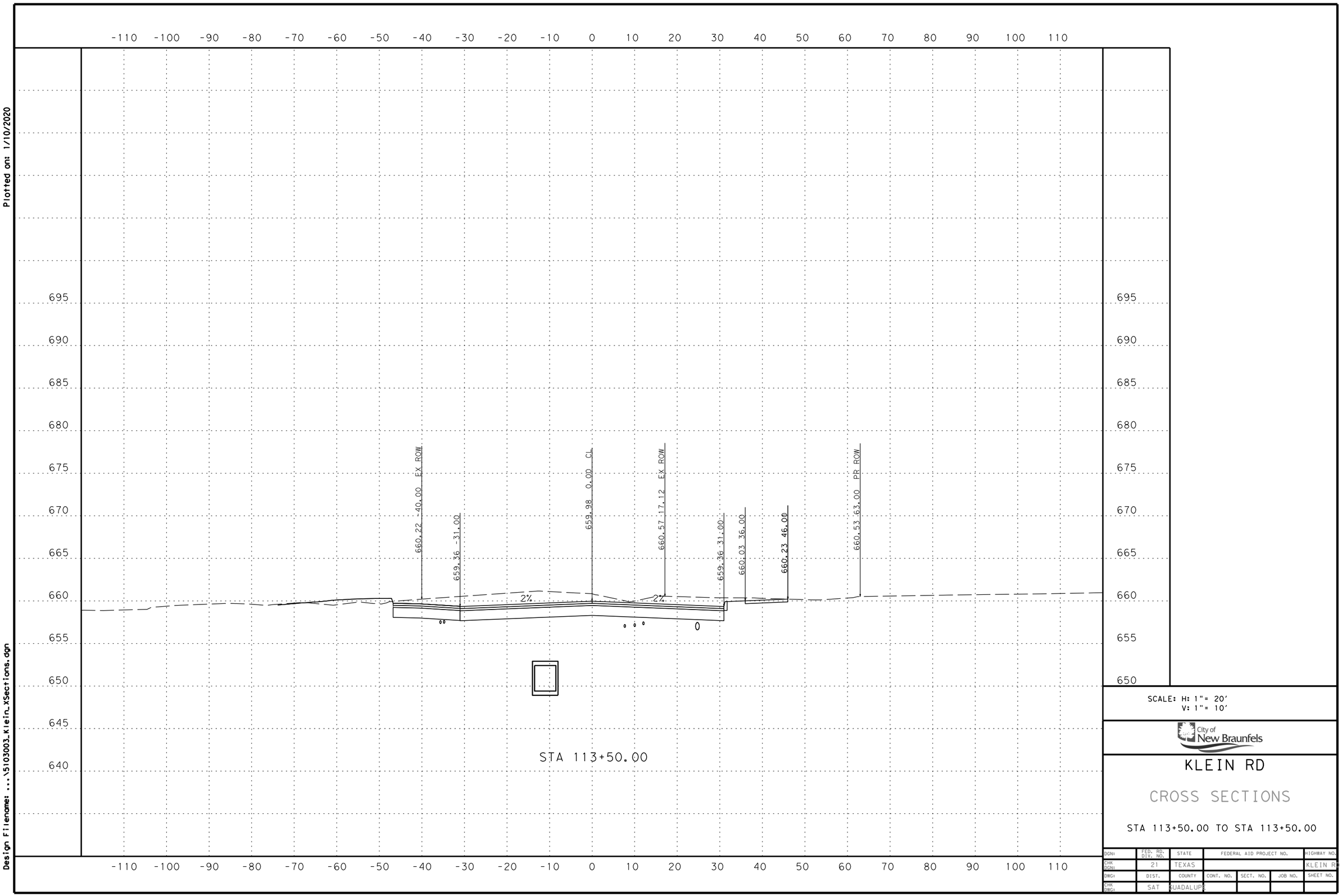

SCALE: H: 1"= 20'
V: 1"= 10'

City of New Braunfels

KLEIN RD

CROSS SECTIONS

STA 113+50.00 TO STA 113+50.00

DGN:	FED. RD. DIV. NO.	STATE	FEDERAL AID PROJECT NO.			HIGHWAY NO.
CHK DGN:	21	TEXAS				KLEIN RD
DWG:	DIST.	COUNTY	CONT. NO.	SECT. NO.	JOB NO.	SHEET NO.
CHK DWG:	SAT	GUADALUPE				

Plotted on: 1/10/2020

Design Filename: ...\5103003_Klein_XSections.dgn

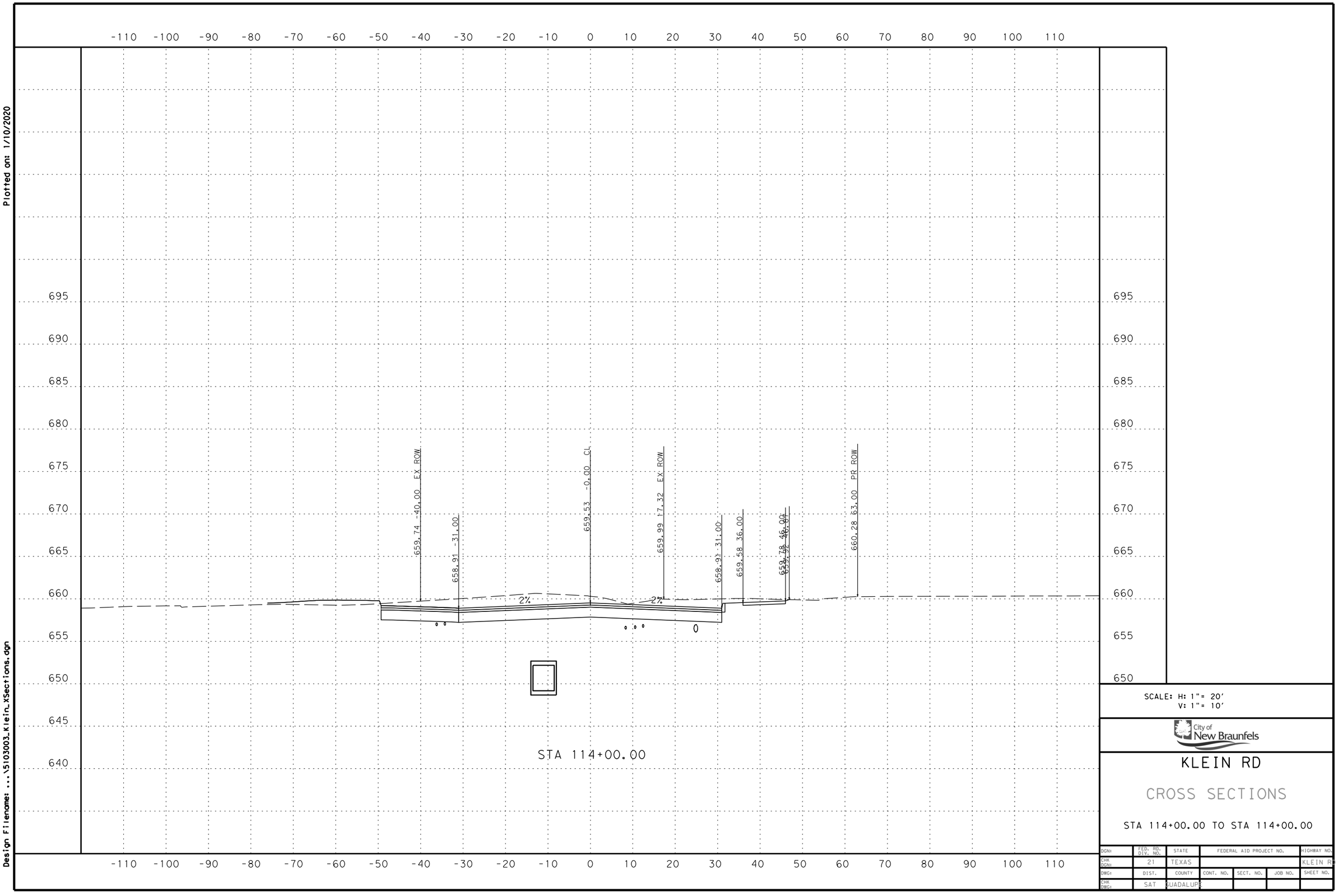

SCALE: H: 1"= 20'
V: 1"= 10'

City of New Braunfels

KLEIN RD

CROSS SECTIONS

STA 114+00.00 TO STA 114+00.00

DGN:	FED. RD. DIV. NO.	STATE	FEDERAL AID PROJECT NO.			HIGHWAY NO.
CHK DGN:	21	TEXAS				KLEIN RD
DWG:	DIST.	COUNTY	CONT. NO.	SECT. NO.	JOB NO.	SHEET NO.
CHK DWG:	SAT	GUADALUPE				

Plotted on: 1/10/2020

Design Filename: ...\5103003_Klein_XSections.dgn

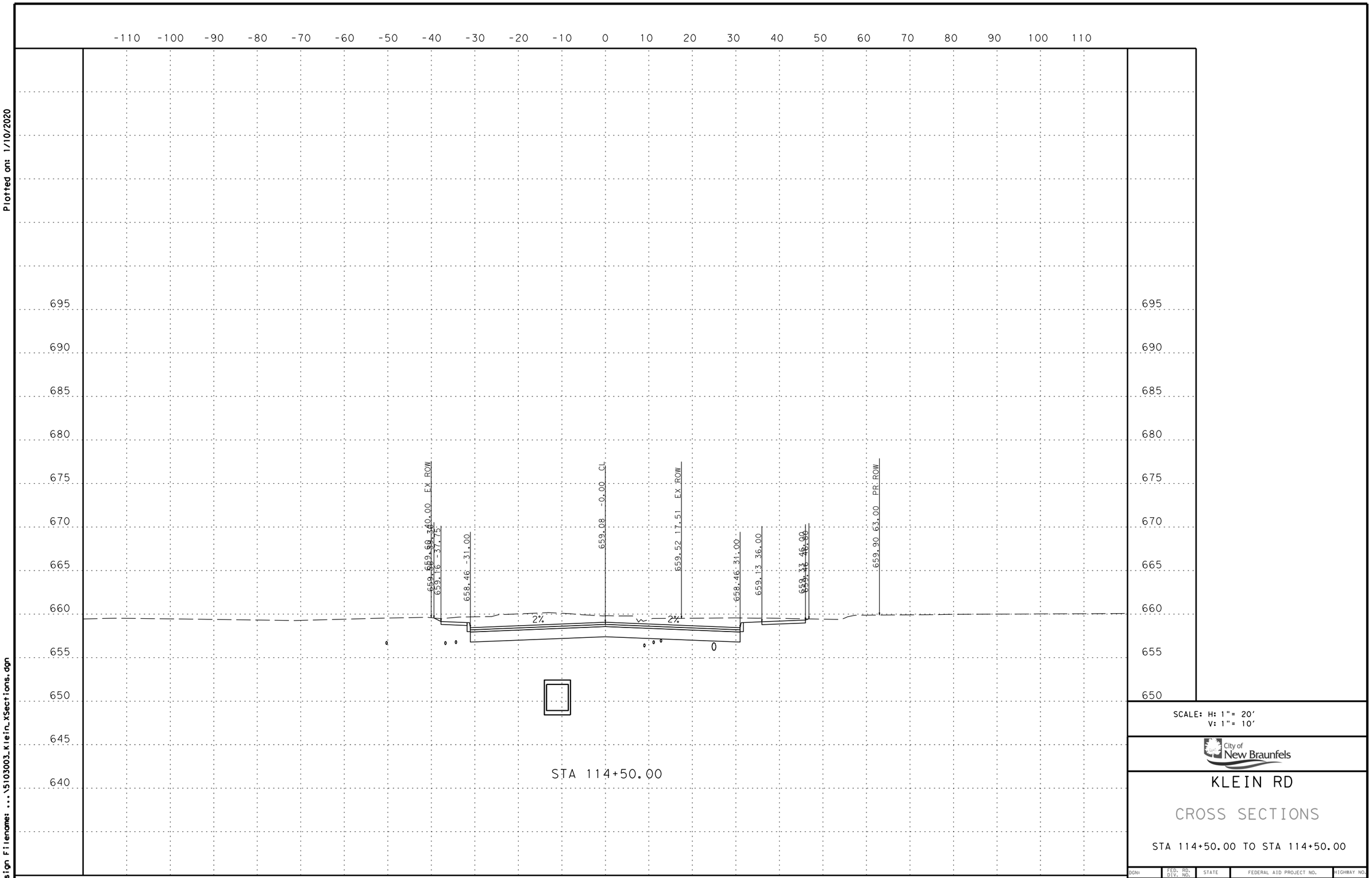

STA 114+50.00

SCALE: H: 1"= 20'
V: 1"= 10'

City of New Braunfels

KLEIN RD

CROSS SECTIONS

STA 114+50.00 TO STA 114+50.00

DGN:	FED. RD. DIV. NO.	STATE	FEDERAL AID PROJECT NO.			HIGHWAY NO.
CHK DGN:	21	TEXAS				KLEIN RD
DWG:	DIST.	COUNTY	CONT. NO.	SECT. NO.	JOB NO.	SHEET NO.
CHK DWG:	SAT	GUADALUPE				

Plotted on: 1/10/2020

Design Filename: ...\5103003_Klein_XSections.dgn

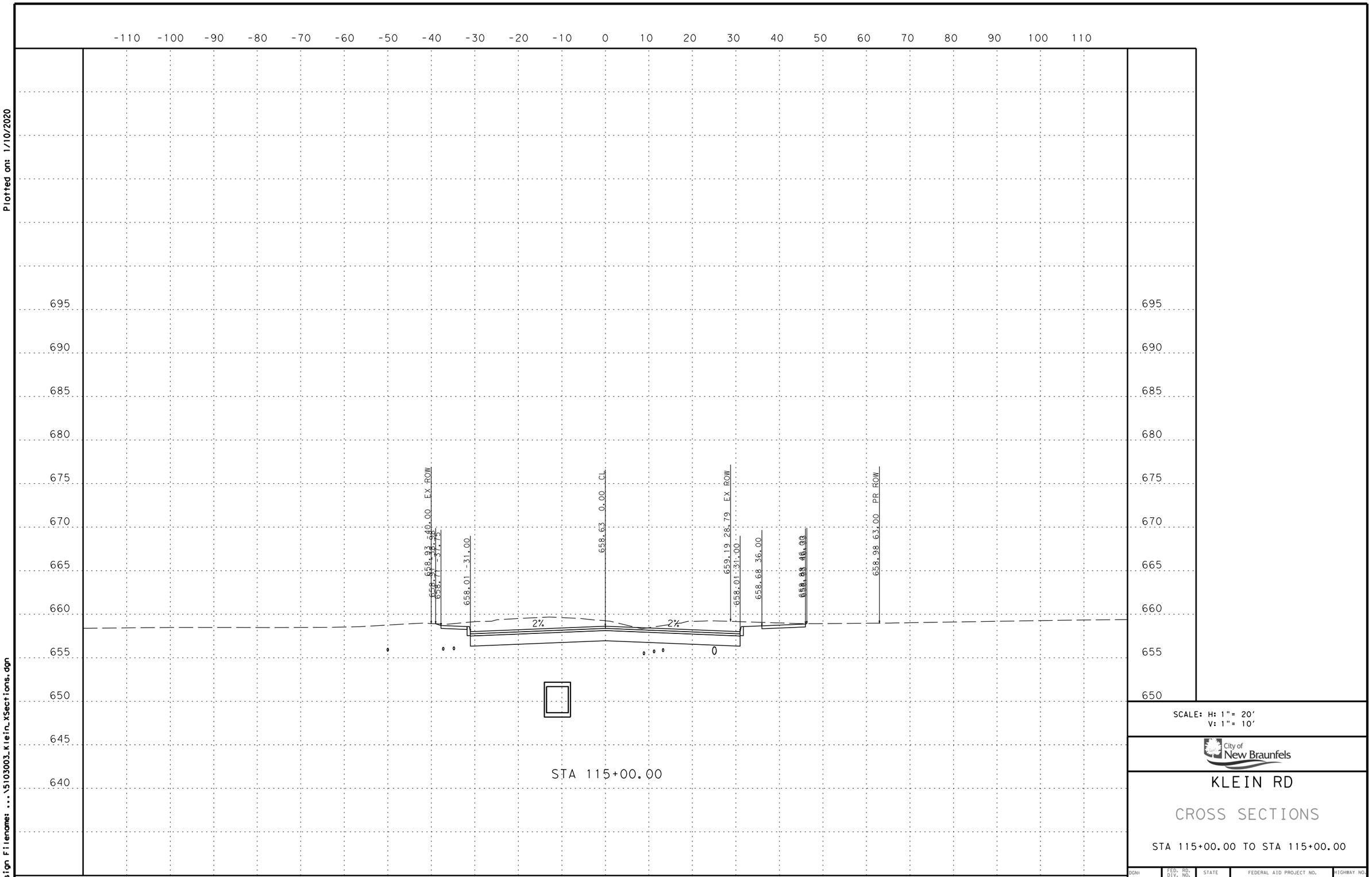

SCALE: H: 1"= 20'
V: 1"= 10'

City of New Braunfels

KLEIN RD

CROSS SECTIONS

STA 115+00.00 TO STA 115+00.00

DGN:	FED. RD. DIV. NO.	STATE	FEDERAL AID PROJECT NO.			HIGHWAY NO.
CHK DGN:	21	TEXAS				KLEIN RD
DWG:	DIST.	COUNTY	CONT. NO.	SECT. NO.	JOB NO.	SHEET NO.
CHK DWG:	SAT	GUADALUPE				

Plotted on: 1/10/2020

Design Filename: ...\5103003_Klein_XSections.dgn

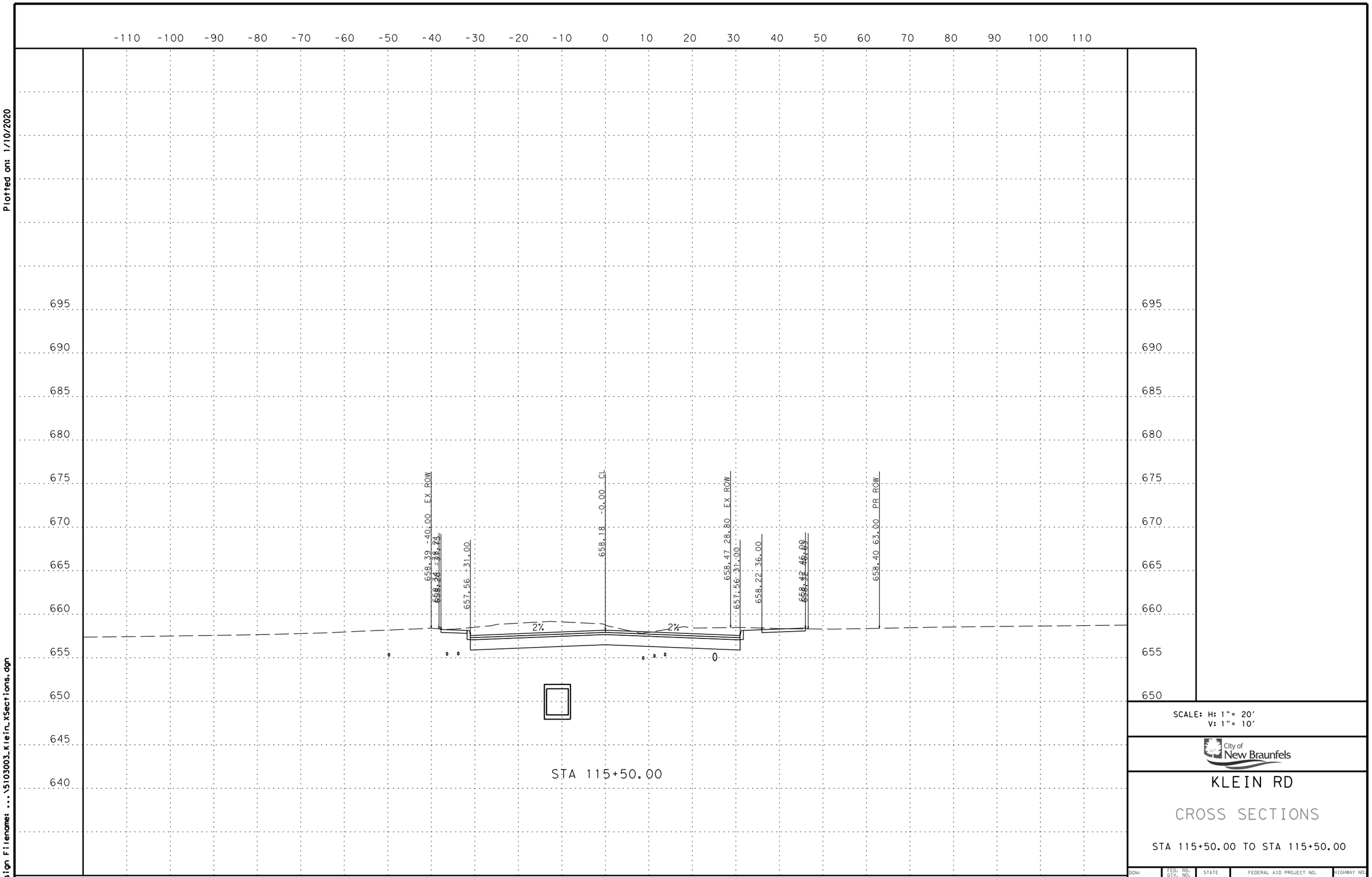

SCALE: H: 1" = 20'
V: 1" = 10'

City of New Braunfels

KLEIN RD

CROSS SECTIONS

STA 115+50.00 TO STA 115+50.00

DGN:	FED. RD. DIV. NO.	STATE	FEDERAL AID PROJECT NO.				HIGHWAY NO.
CHK DGN:	21	TEXAS					KLEIN RD
DWG:	DIST.	COUNTY	CONT. NO.	SECT. NO.	JOB NO.		SHEET NO.
CHK DWG:	SAT	GUADALUPE					

Plotted on: 1/10/2020

Design Filename: ...\5103003_Klein_XSections.dgn

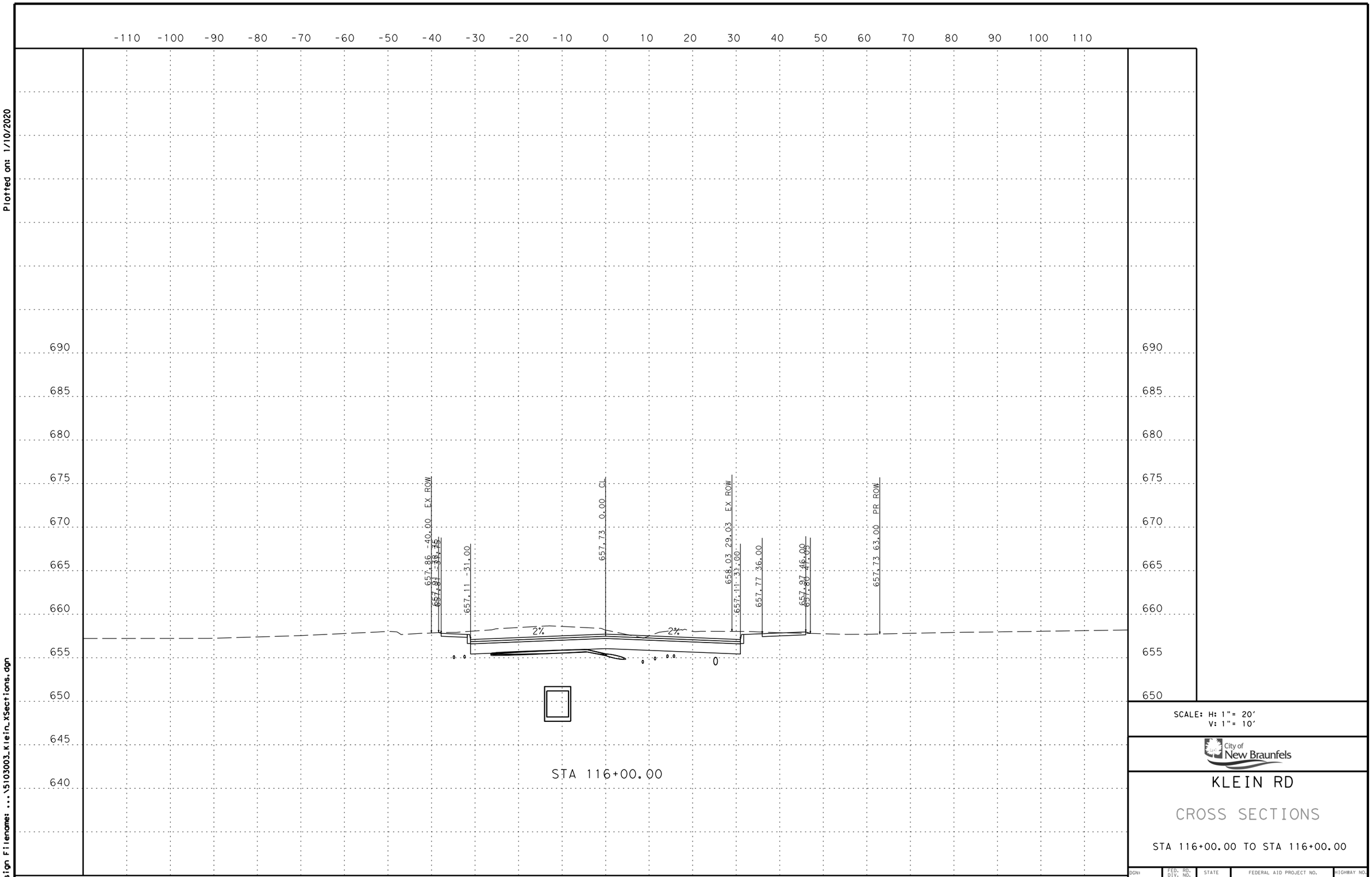

SCALE: H: 1" = 20'
V: 1" = 10'

City of New Braunfels

KLEIN RD

CROSS SECTIONS

STA 116+00.00 TO STA 116+00.00

DGN:	FED. RD. DIV. NO.	STATE	FEDERAL AID PROJECT NO.			HIGHWAY NO.
CHK DGN:	21	TEXAS				KLEIN RD
DWG:	DIST.	COUNTY	CONT. NO.	SECT. NO.	JOB NO.	SHEET NO.
CHK DWG:	SAT	GUADALUPE				

Plotted on: 1/10/2020

Design Filename: ...\5103003_Klein_XSections.dgn

-110 -100 -90 -80 -70 -60 -50 -40 -30 -20 -10 0 10 20 30 40 50 60 70 80 90 100 110

690
685
680
675
670
665
660
655
650
645
640

657.21 -40.00 EX ROW
657.29 -37.84
656.51 -31.00
657.13 0.00 CL
657.45 29.27 EX ROW
656.51 31.00
657.17 36.00
657.37 46.00
656.96 63.00 PR ROW

2%
2%
0

STA 116+50.00

SCALE: H: 1"= 20'
V: 1"= 10'

City of New Braunfels

KLEIN RD

CROSS SECTIONS

STA 116+50.00 TO STA 116+50.00

DGN:	FED. RD. DIV. NO.	STATE	FEDERAL AID PROJECT NO.			HIGHWAY NO.
CHK DGN:	21	TEXAS				KLEIN RD
DWG:	DIST.	COUNTY	CONT. NO.	SECT. NO.	JOB NO.	SHEET NO.
CHK DWG:	SAT	GUADALUPE				

Plotted on: 1/10/2020

Design Filename: ...\5103003_Klein_XSections.dgn

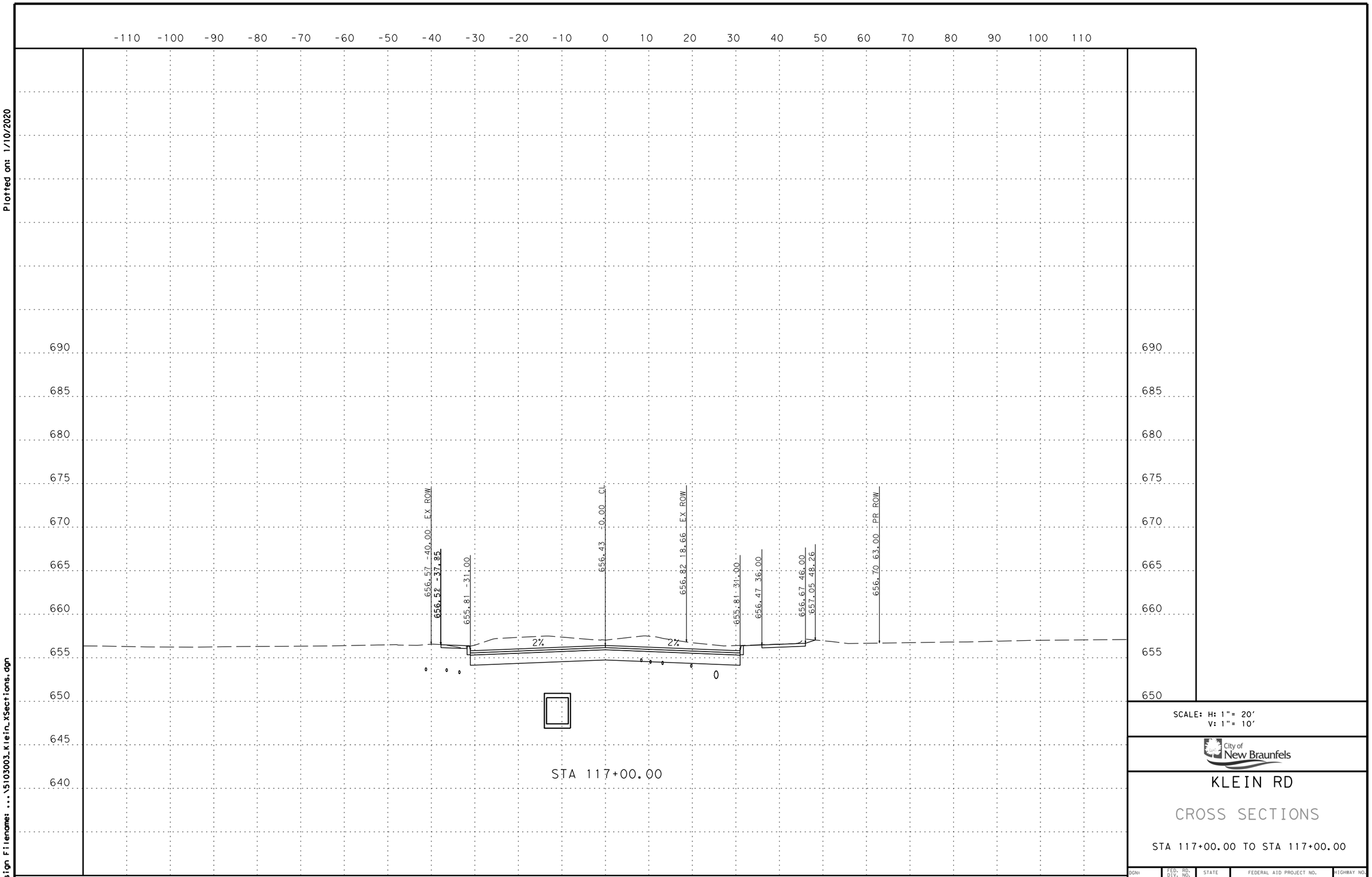

SCALE: H: 1"= 20'
V: 1"= 10'

City of New Braunfels

KLEIN RD

CROSS SECTIONS

STA 117+00.00 TO STA 117+00.00

DGN:	FED. RD. DIV. NO.	STATE	FEDERAL AID PROJECT NO.			HIGHWAY NO.
CHK DGN:	21	TEXAS				KLEIN RD
DWG:	DIST.	COUNTY	CONT. NO.	SECT. NO.	JOB NO.	SHEET NO.
CHK DWG:	SAT	GUADALUPE				

Plotted on: 1/10/2020

Design Filename: ...\5103003_Klein_XSections.dgn

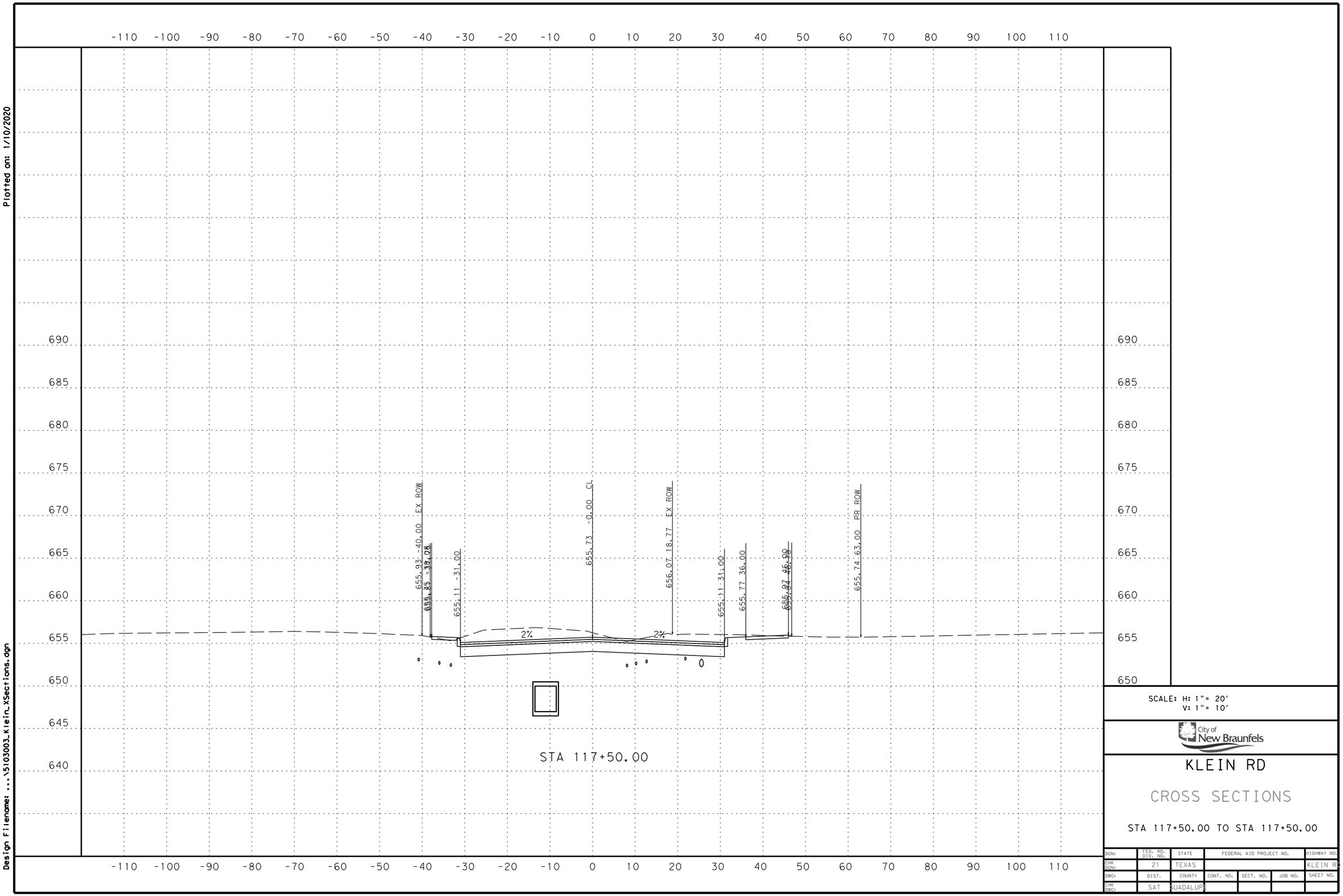

SCALE: H: 1" = 20'
V: 1" = 10'

City of New Braunfels

KLEIN RD

CROSS SECTIONS

STA 117+50.00 TO STA 117+50.00

DGN:	FED. RD. DIV. NO.	STATE	FEDERAL AID PROJECT NO.			HIGHWAY NO.
CHK DGN:	21	TEXAS				KLEIN RD
DWG:	DIST.	COUNTY	CONT. NO.	SECT. NO.	JOB NO.	SHEET NO.
CHK DWG:	SAT	GUADALUPE				

Plotted on: 1/10/2020

Design Filename: ...\5103003_Klein_XSections.dgn

SCALE: H: 1" = 20'
V: 1" = 10'

City of New Braunfels

KLEIN RD

CROSS SECTIONS

STA 118+00.00 TO STA 118+00.00

DGN:	FED. RD. DIV. NO.	STATE	FEDERAL AID PROJECT NO.			HIGHWAY NO.
CHK DGN:	21	TEXAS				KLEIN RD
DWG:	DIST.	COUNTY	CONT. NO.	SECT. NO.	JOB NO.	SHEET NO.
CHK DWG:	SAT	GUADALUPE				

Plotted on: 1/10/2020

Design Filename: ...\5103003_Klein_XSections.dgn

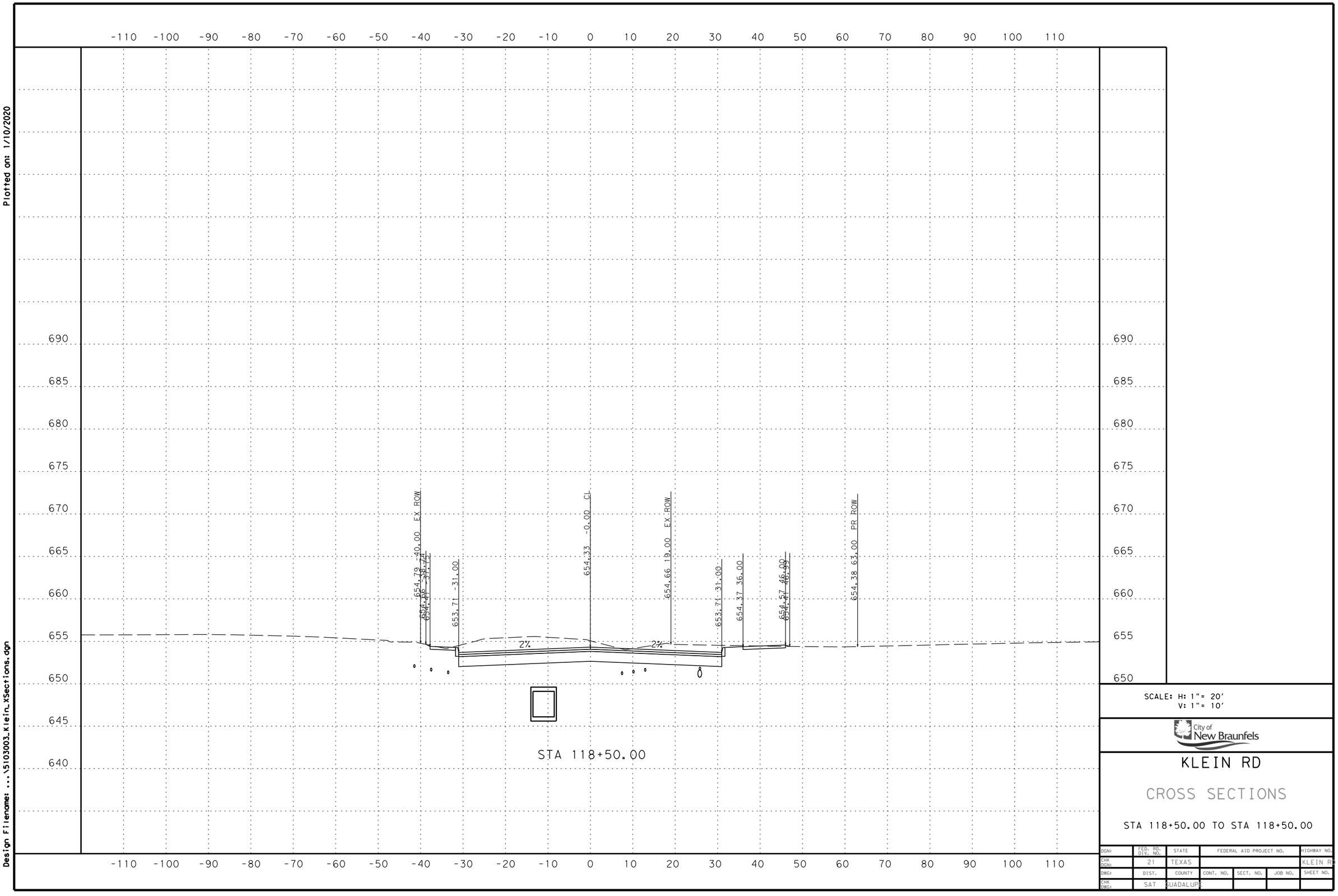

SCALE: H: 1"= 20'
V: 1"= 10'

City of New Braunfels

KLEIN RD

CROSS SECTIONS

STA 118+50.00 TO STA 118+50.00

DGN:	FED. RD. DIV. NO.	STATE	FEDERAL AID PROJECT NO.			HIGHWAY NO.
CHK DGN:	21	TEXAS				KLEIN RD
DWG:	DIST.	COUNTY	CONT. NO.	SECT. NO.	JOB NO.	SHEET NO.
CHK DWG:	SAT	GUADALUPE				

Plotted on: 1/10/2020

Design Filename: ...\5103003_Klein_XSections.dgn

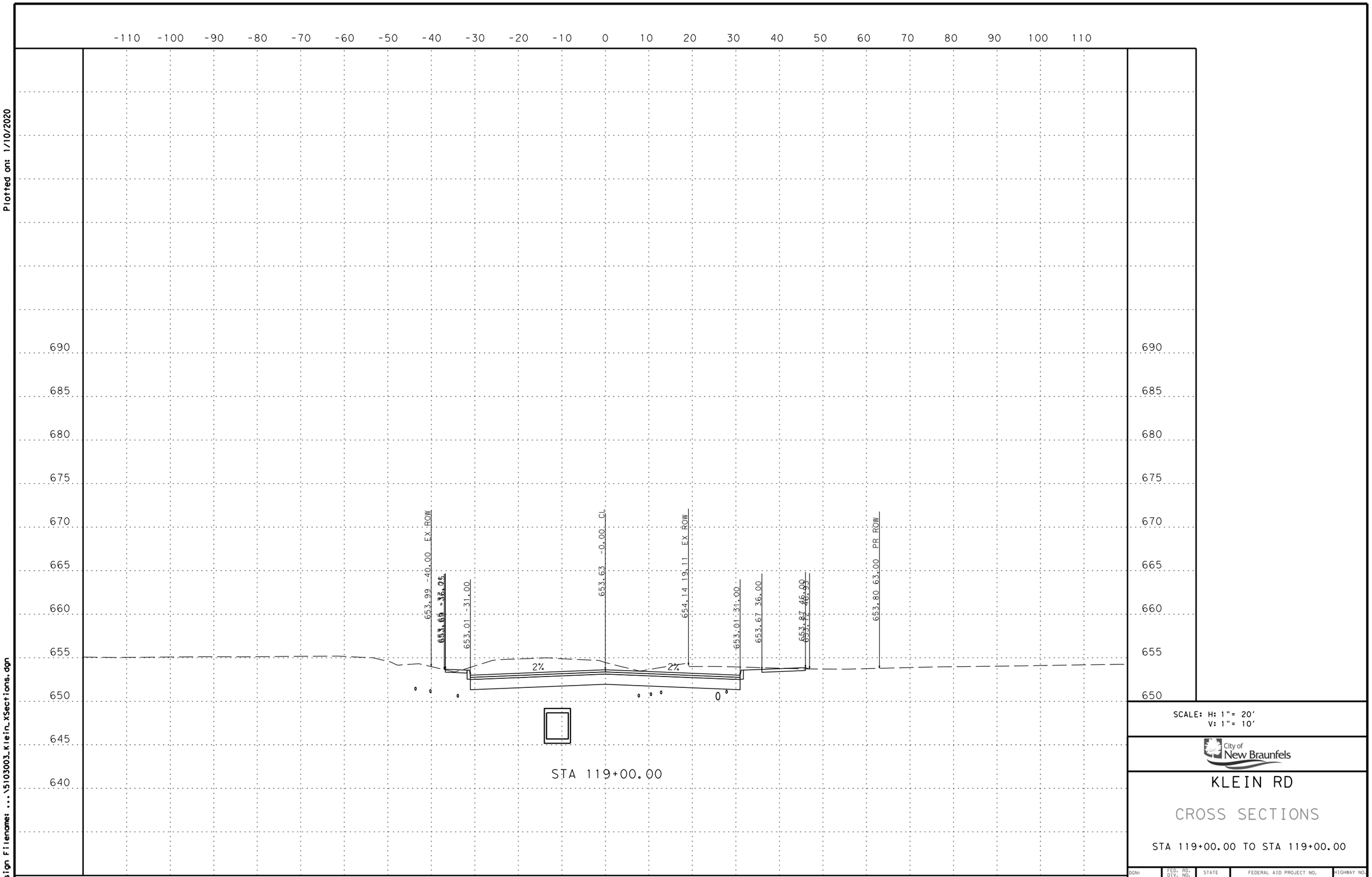

SCALE: H: 1" = 20'
V: 1" = 10'

City of New Braunfels

KLEIN RD

CROSS SECTIONS

STA 119+00.00 TO STA 119+00.00

DGN:	FED. RD. DIV. NO.	STATE	FEDERAL AID PROJECT NO.			HIGHWAY NO.
CHK DGN:	21	TEXAS				KLEIN RD
DWG:	DIST.	COUNTY	CONT. NO.	SECT. NO.	JOB NO.	SHEET NO.
CHK DWG:	SAT	GUADALUPE				

Plotted on: 1/10/2020

Design Filename: ...\5103003_Klein_XSections.dgn

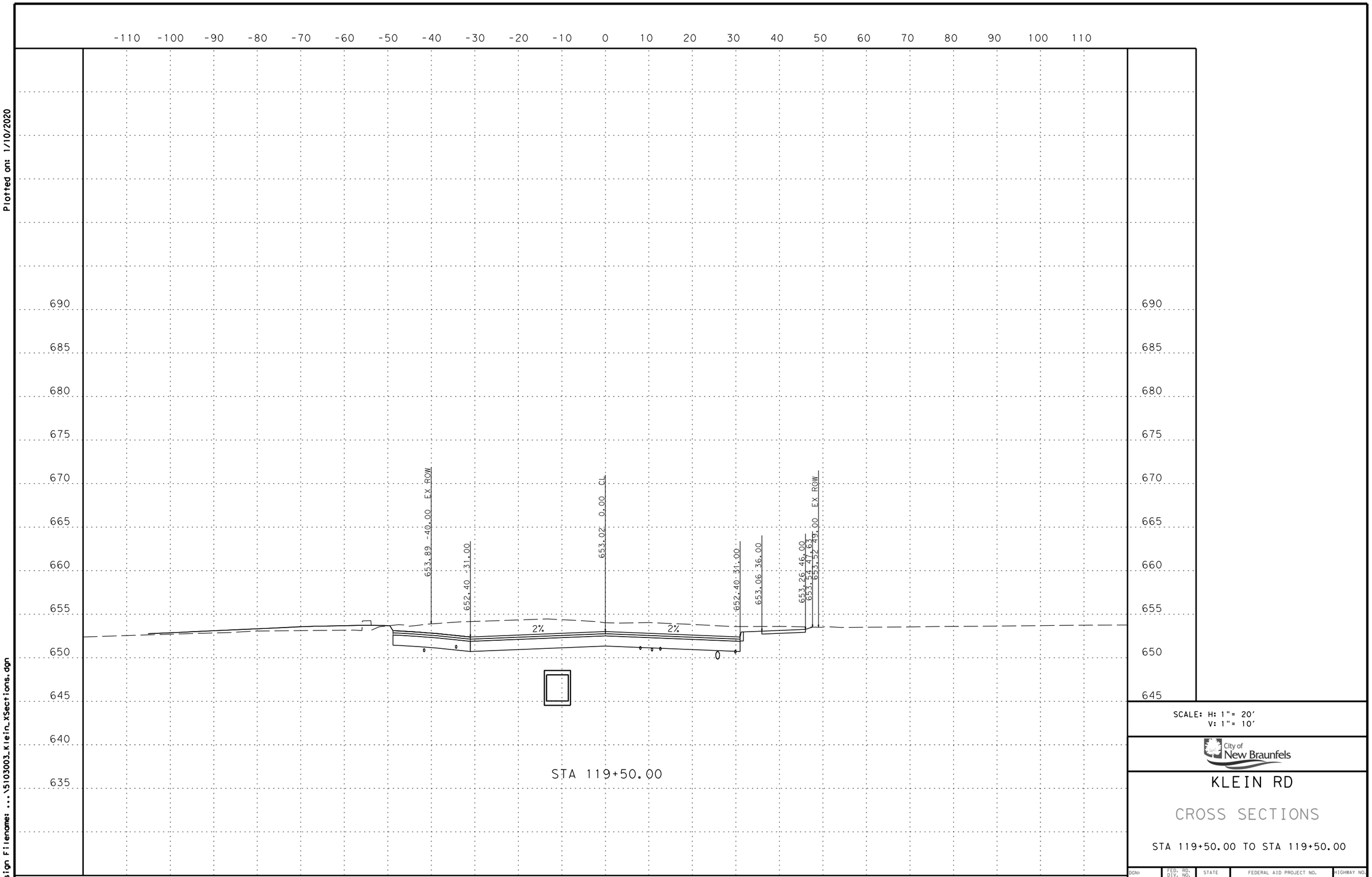

SCALE: H: 1"= 20'
V: 1"= 10'

City of New Braunfels

KLEIN RD

CROSS SECTIONS

STA 119+50.00 TO STA 119+50.00

DGN:	FED. RD. DIV. NO.	STATE	FEDERAL AID PROJECT NO.			HIGHWAY NO.
CHK DGN:	21	TEXAS				KLEIN RD
DWG:	DIST.	COUNTY	CONT. NO.	SECT. NO.	JOB NO.	SHEET NO.
CHK DWG:	SAT	GUADALUPE				

Plotted on: 1/10/2020

Design Filename: ...\5103003_Klein_XSections.dgn

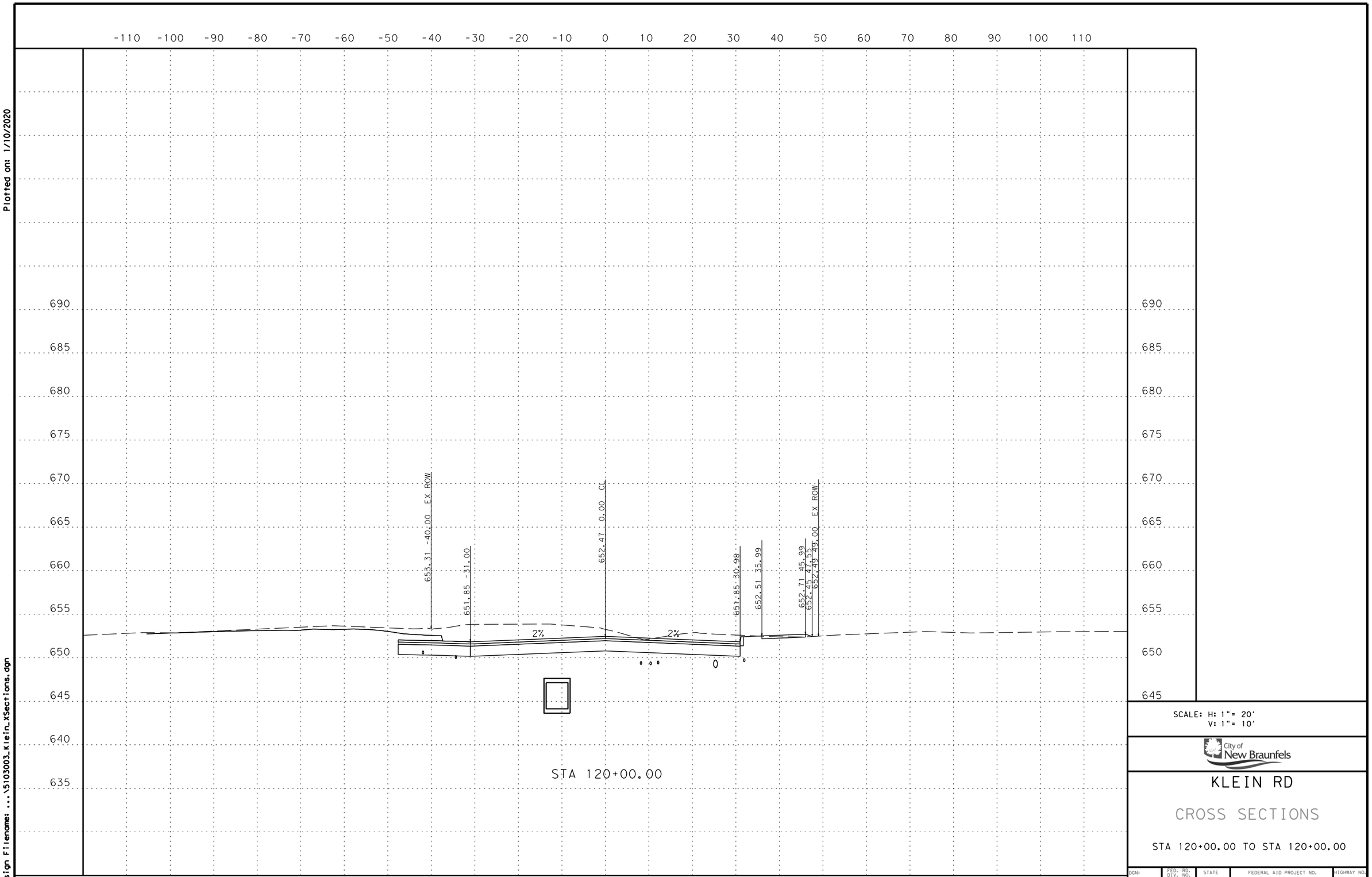

SCALE: H: 1" = 20'
V: 1" = 10'

City of New Braunfels

KLEIN RD

CROSS SECTIONS

STA 120+00.00 TO STA 120+00.00

DGN:	FED. RD. DIV. NO.	STATE	FEDERAL AID PROJECT NO.			HIGHWAY NO.
CHK DGN:	21	TEXAS				KLEIN RD
DWG:	DIST.	COUNTY	CONT. NO.	SECT. NO.	JOB NO.	SHEET NO.
CHK DWG:	SAT	GUADALUPE				

Plotted on: 1/10/2020

Design Filename: ...\5103003_Klein_XSections.dgn

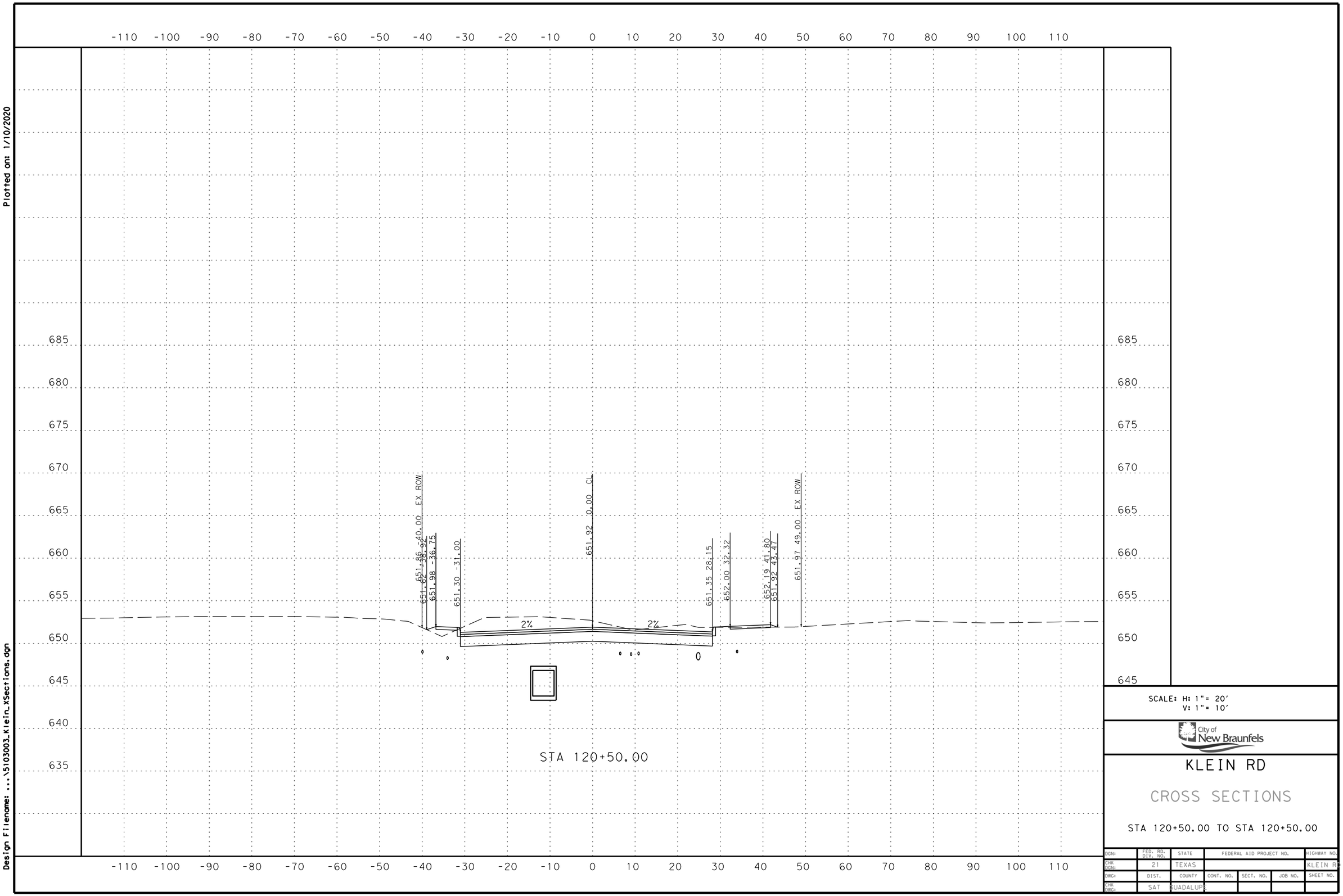

SCALE: H: 1" = 20'
V: 1" = 10'

City of New Braunfels

KLEIN RD

CROSS SECTIONS

STA 120+50.00 TO STA 120+50.00

DGN:	FED. RD. DIV. NO.	STATE	FEDERAL AID PROJECT NO.			HIGHWAY NO.
CHK DGN:	21	TEXAS				KLEIN RD
DWG:	DIST.	COUNTY	CONT. NO.	SECT. NO.	JOB NO.	SHEET NO.
CHK DWG:	SAT	GUADALUPE				

Plotted on: 1/10/2020

Design Filename: ...\5103003_Klein_XSections.dgn

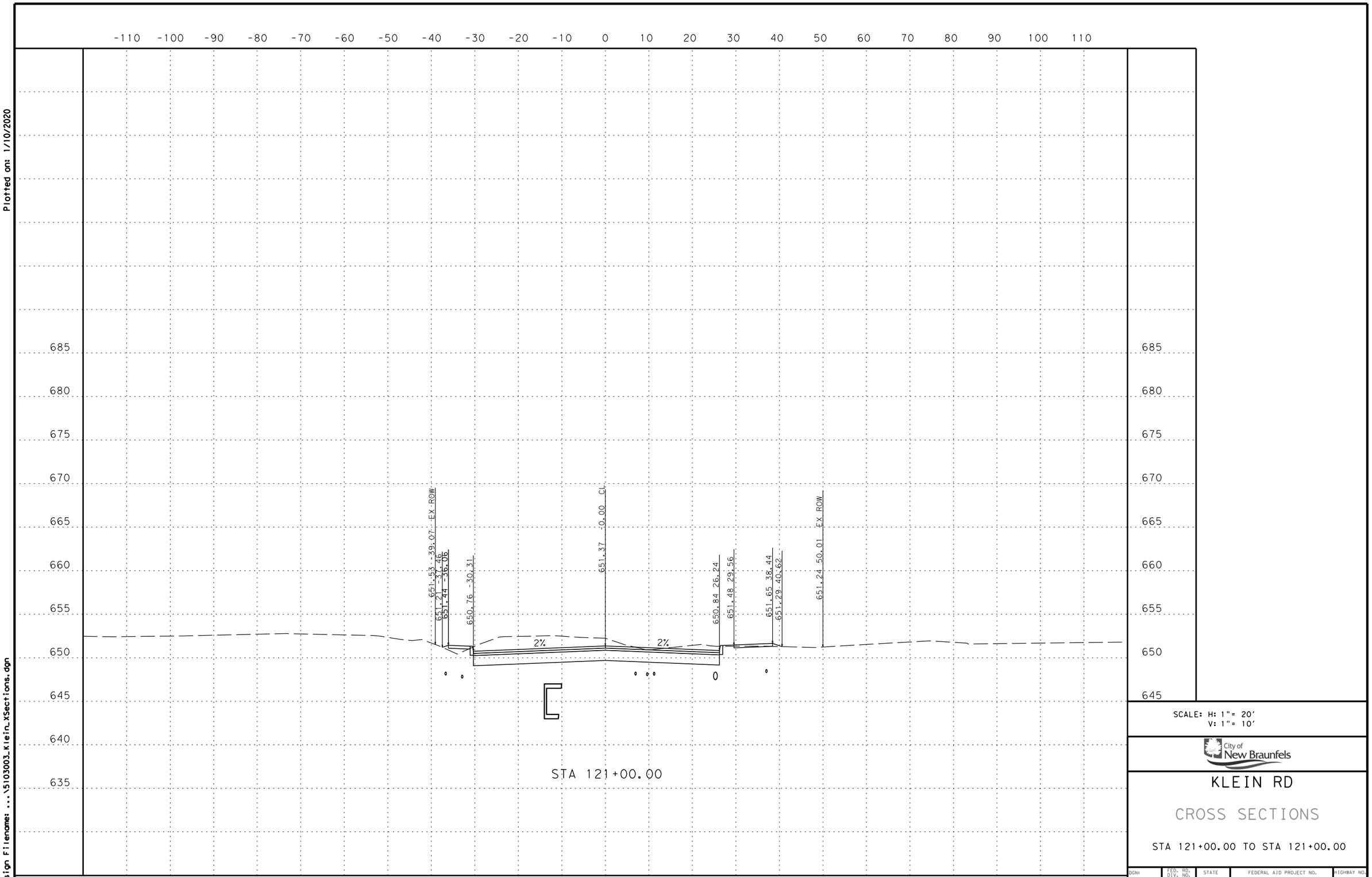

SCALE: H: 1"= 20'
V: 1"= 10'

City of New Braunfels

KLEIN RD

CROSS SECTIONS

STA 121+00.00 TO STA 121+00.00

DGN:	FED. RD. DIV. NO.	STATE	FEDERAL AID PROJECT NO.			HIGHWAY NO.
CHK DGN:	21	TEXAS				KLEIN RD
DWG:	DIST.	COUNTY	CONT. NO.	SECT. NO.	JOB NO.	SHEET NO.
CHK DWG:	SAT	GUADALUPE				

Plotted on: 1/10/2020

Design Filename: ...\5103003_Klein_XSections.dgn

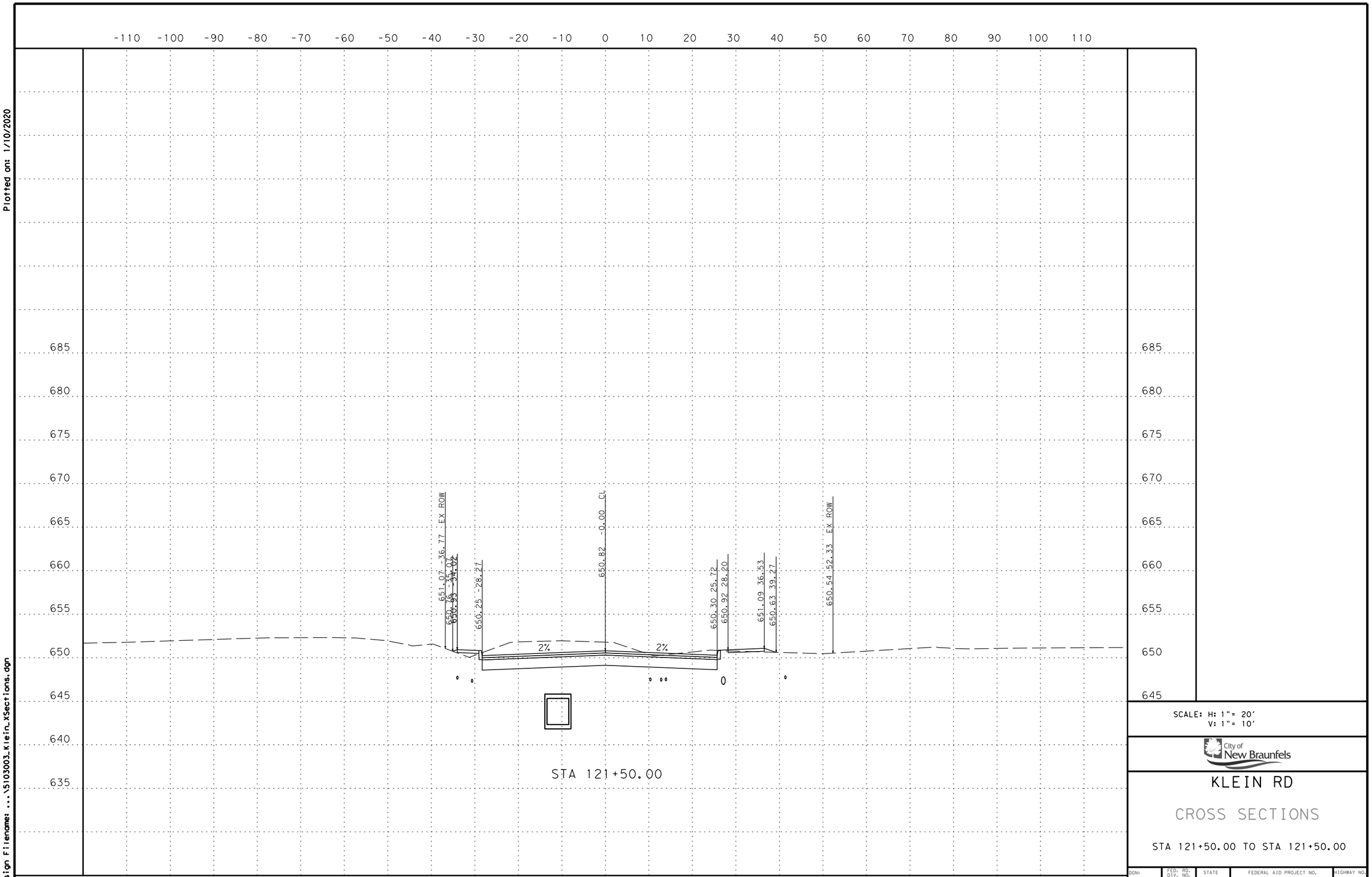

SCALE: H: 1"= 20'
V: 1"= 10'

City of New Braunfels

KLEIN RD

CROSS SECTIONS

STA 121+50.00 TO STA 121+50.00

DGN:	FED. RD. DIV. NO.	STATE	FEDERAL AID PROJECT NO.			HIGHWAY NO.
CHK DGN:	21	TEXAS				KLEIN RD
DWG:	DIST.	COUNTY	CONT. NO.	SECT. NO.	JOB NO.	SHEET NO.
CHK DWG:	SAT	GUADALUPE				

Plotted on: 1/10/2020

Design Filename: ...\5103003_Klein_XSections.dgn

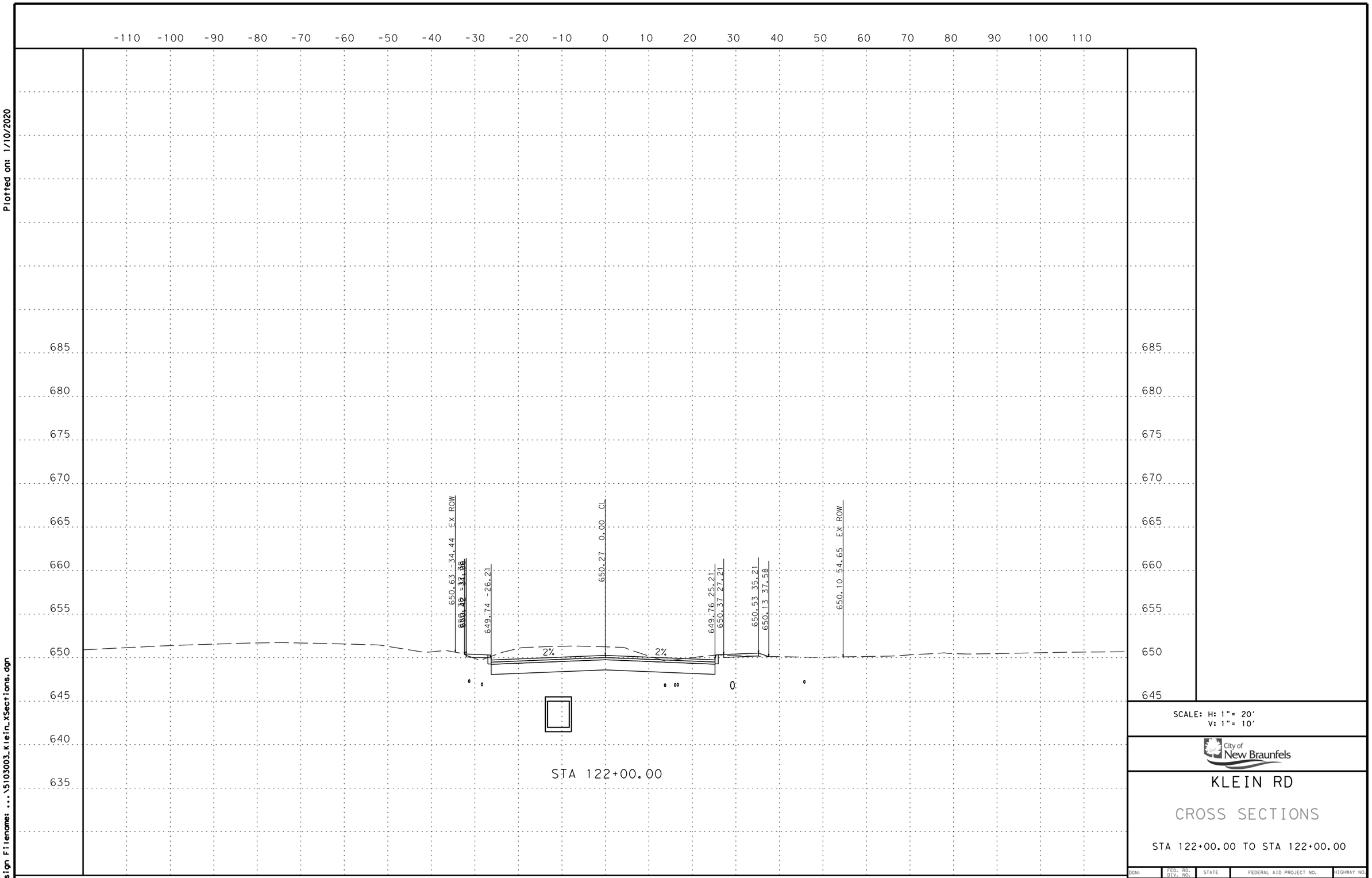

SCALE: H: 1"= 20'
V: 1"= 10'

City of New Braunfels

KLEIN RD

CROSS SECTIONS

STA 122+00.00 TO STA 122+00.00

DGN:	FED. RD. DIV. NO.	STATE	FEDERAL AID PROJECT NO.			HIGHWAY NO.
CHK DGN:	21	TEXAS				KLEIN RD
DWG:	DIST.	COUNTY	CONT. NO.	SECT. NO.	JOB NO.	SHEET NO.
CHK DWG:	SAT	GUADALUPE				

Plotted on: 1/10/2020

Design Filename: ...\5103003_Klein_XSections.dgn

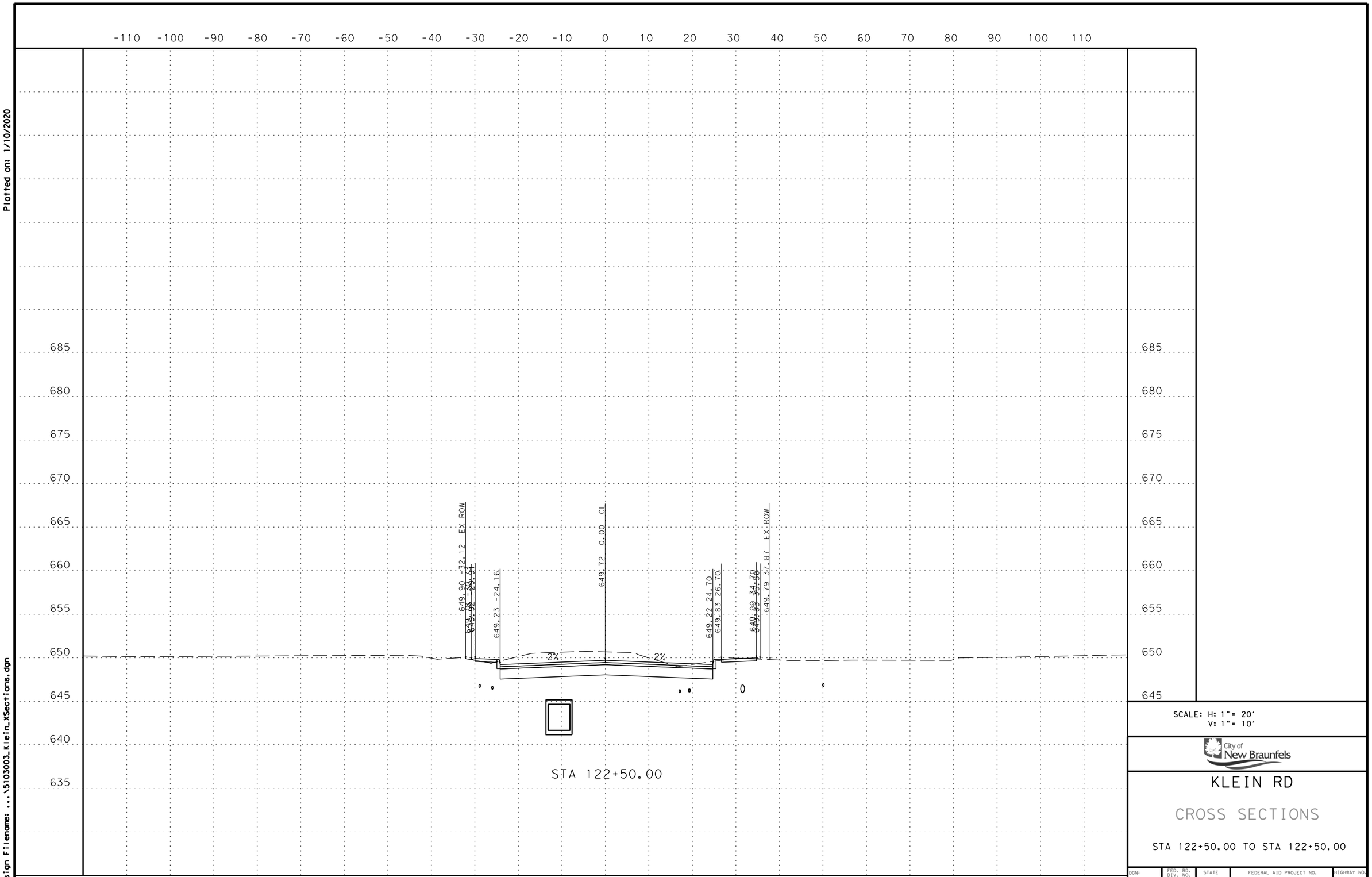

SCALE: H: 1"= 20'
V: 1"= 10'

City of New Braunfels

KLEIN RD

CROSS SECTIONS

STA 122+50.00 TO STA 122+50.00

DGN:	FED. RD. DIV. NO.	STATE	FEDERAL AID PROJECT NO.				HIGHWAY NO.
CHK DGN:	21	TEXAS					KLEIN RD
DWG:	DIST.	COUNTY	CONT. NO.	SECT. NO.	JOB NO.		SHEET NO.
CHK DWG:	SAT	GUADALUPE					

Plotted on: 1/10/2020

Design Filename: ...\5103003_Klein_XSections.dgn

SCALE: H: 1"= 20'
V: 1"= 10'

City of New Braunfels

KLEIN RD

CROSS SECTIONS

STA 123+00.00 TO STA 123+00.00

DGN:	FED. RD. DIV. NO.	STATE	FEDERAL AID PROJECT NO.			HIGHWAY NO.
CHK DGN:	21	TEXAS				KLEIN RD
DWG:	DIST.	COUNTY	CONT. NO.	SECT. NO.	JOB NO.	SHEET NO.
CHK DWG:	SAT	GUADALUPE				

Plotted on: 1/10/2020

Design Filename: ...\5103003_Klein_XSections.dgn

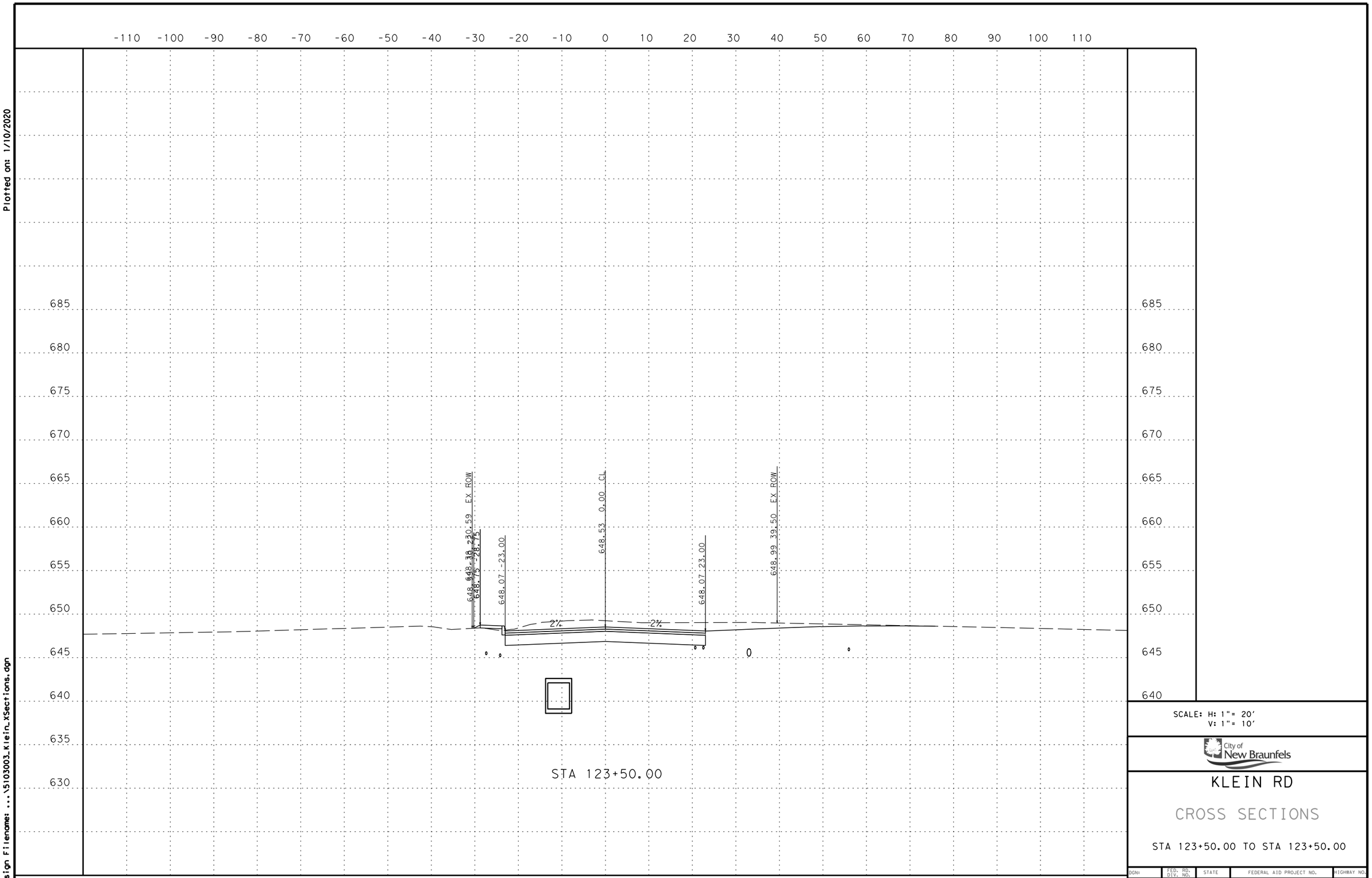

SCALE: H: 1" = 20'
V: 1" = 10'

City of New Braunfels

KLEIN RD

CROSS SECTIONS

STA 123+50.00 TO STA 123+50.00

DGN:	FED. RD. DIV. NO.	STATE	FEDERAL AID PROJECT NO.			HIGHWAY NO.
CHK DGN:	21	TEXAS				KLEIN RD
DWG:	DIST.	COUNTY	CONT. NO.	SECT. NO.	JOB NO.	SHEET NO.
CHK DWG:	SAT	GUADALUPE				

Plotted on: 1/10/2020

Design Filename: ...\5103003_Klein_XSections.dgn

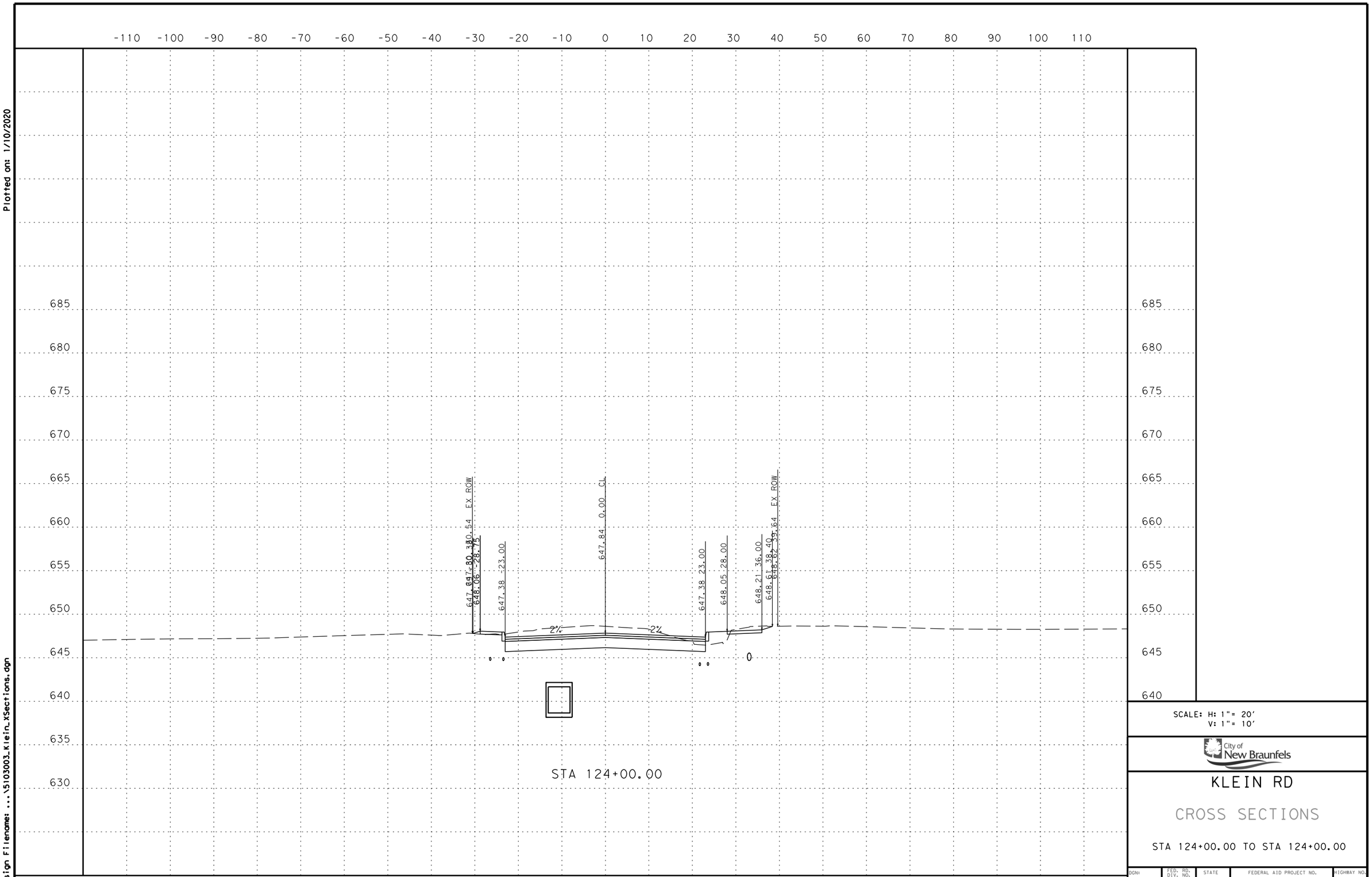

SCALE: H: 1" = 20'
V: 1" = 10'

City of New Braunfels

KLEIN RD

CROSS SECTIONS

STA 124+00.00 TO STA 124+00.00

DGN:	FED. RD. DIV. NO.	STATE	FEDERAL AID PROJECT NO.			HIGHWAY NO.
CHK DGN:	21	TEXAS				KLEIN RD
DWG:	DIST.	COUNTY	CONT. NO.	SECT. NO.	JOB NO.	SHEET NO.
CHK DWG:	SAT	GUADALUPE				

Plotted on: 1/10/2020

Design Filename: ...\5103003_Klein_XSections.dgn

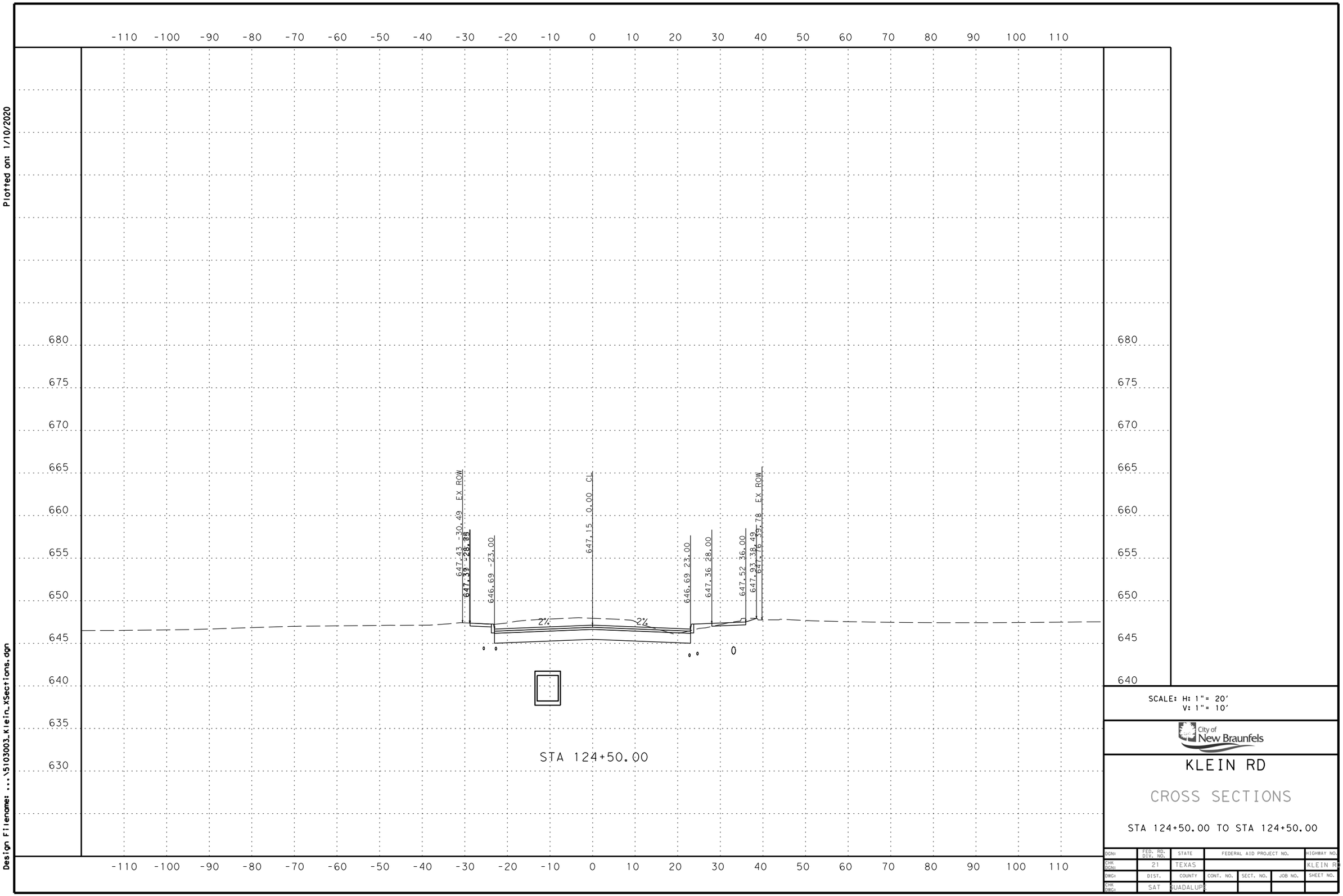

SCALE: H: 1" = 20'
V: 1" = 10'

City of New Braunfels

KLEIN RD

CROSS SECTIONS

STA 124+50.00 TO STA 124+50.00

DGN:	FED. RD. DIV. NO.	STATE	FEDERAL AID PROJECT NO.			HIGHWAY NO.
CHK DGN:	21	TEXAS				KLEIN RD
DWG:	DIST.	COUNTY	CONT. NO.	SECT. NO.	JOB NO.	SHEET NO.
CHK DWG:	SAT	GUADALUPE				

Plotted on: 1/10/2020

Design Filename: ...\5103003_Klein_XSections.dgn

SCALE: H: 1" = 20'
V: 1" = 10'

City of New Braunfels

KLEIN RD

CROSS SECTIONS

STA 125+00.00 TO STA 125+00.00

DGN:	FED. RD. DIV. NO.	STATE	FEDERAL AID PROJECT NO.			HIGHWAY NO.
CHK DGN:	21	TEXAS				KLEIN RD
DWG:	DIST.	COUNTY	CONT. NO.	SECT. NO.	JOB NO.	SHEET NO.
CHK DWG:	SAT	GUADALUPE				

Plotted on: 1/10/2020

Design Filename: ...\5103003_Klein_XSections.dgn

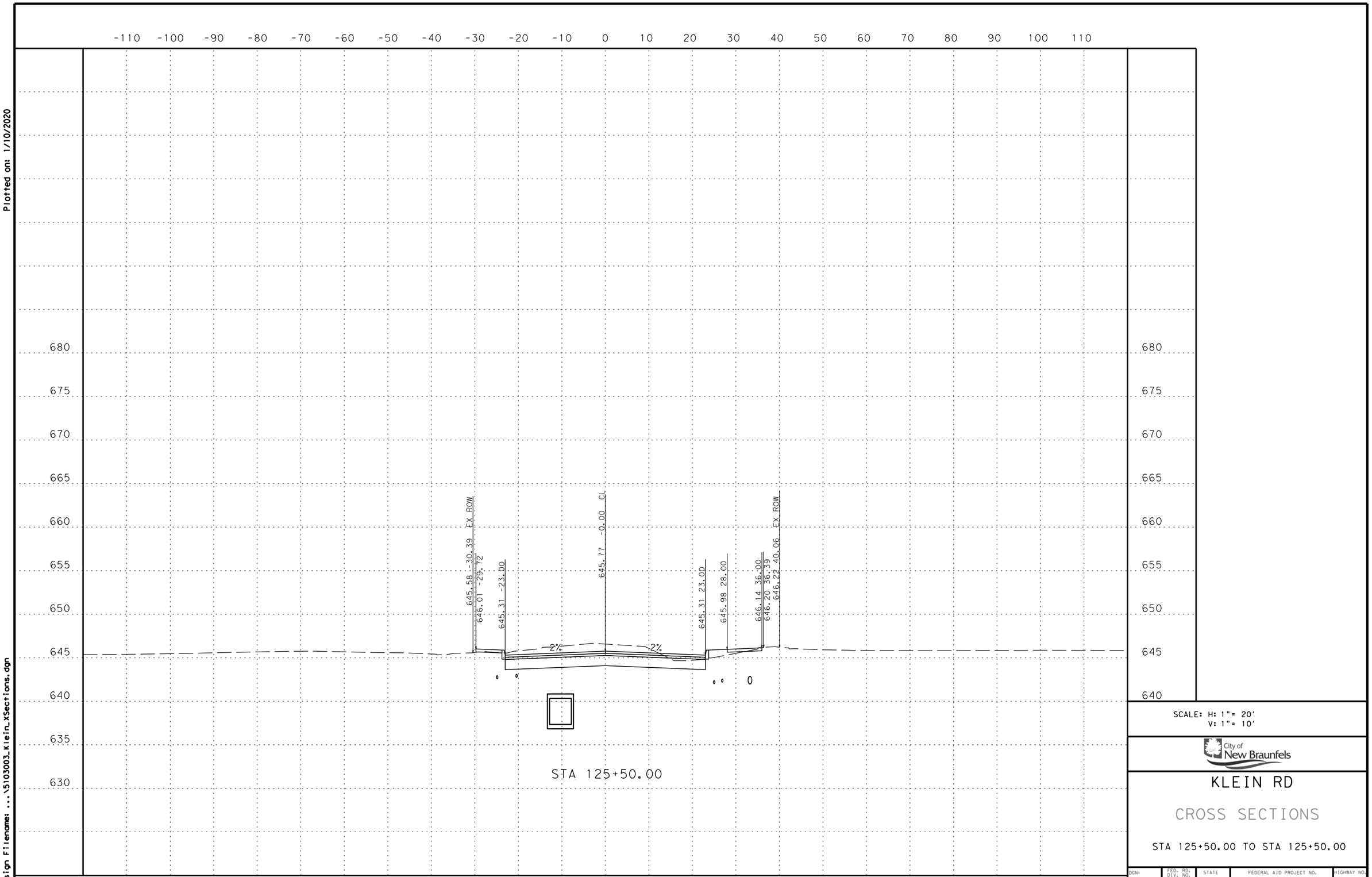

SCALE: H: 1" = 20'
V: 1" = 10'

City of New Braunfels

KLEIN RD

CROSS SECTIONS

STA 125+50.00 TO STA 125+50.00

DGN:	FED. RD. DIV. NO.	STATE	FEDERAL AID PROJECT NO.				HIGHWAY NO.
CHK DGN:	21	TEXAS					KLEIN RD
DWG:	DIST.	COUNTY	CONT. NO.	SECT. NO.	JOB NO.		SHEET NO.
CHK DWG:	SAT	GUADALUPE					

Plotted on: 1/10/2020

Design Filename: ...\5103003_Klein_XSections.dgn

SCALE: H: 1"= 20'
V: 1"= 10'

City of New Braunfels

KLEIN RD

CROSS SECTIONS

STA 126+00.00 TO STA 126+00.00

DGN:	FED. RD. DIV. NO.	STATE	FEDERAL AID PROJECT NO.			HIGHWAY NO.
CHK DGN:	21	TEXAS				KLEIN RD
DWG:	DIST.	COUNTY	CONT. NO.	SECT. NO.	JOB NO.	SHEET NO.
CHK DWG:	SAT	GUADALUPE				

Plotted on: 1/10/2020

Design Filename: ...\5103003_Klein_XSections.dgn

SCALE: H: 1" = 20'
V: 1" = 10'

City of New Braunfels

KLEIN RD

CROSS SECTIONS

STA 126+50.00 TO STA 126+50.00

DGN:	FED. RD. DIV. NO.	STATE	FEDERAL AID PROJECT NO.			HIGHWAY NO.
CHK DGN:	21	TEXAS				KLEIN RD
DWG:	DIST.	COUNTY	CONT. NO.	SECT. NO.	JOB NO.	SHEET NO.
CHK DWG:	SAT	GUADALUPE				

Plotted on: 1/10/2020

Design Filename: ...\5103003_Klein_XSections.dgn

SCALE: H: 1" = 20'
V: 1" = 10'

City of New Braunfels

KLEIN RD

CROSS SECTIONS

STA 127+00.00 TO STA 127+00.00

DGN:	FED. RD. DIV. NO.	STATE	FEDERAL AID PROJECT NO.			HIGHWAY NO.
CHK DGN:	21	TEXAS				KLEIN RD
DWG:	DIST.	COUNTY	CONT. NO.	SECT. NO.	JOB NO.	SHEET NO.
CHK DWG:	SAT	GUADALUPE				

Plotted on: 1/10/2020

Design Filename: ...\5103003_Klein_XSections.dgn

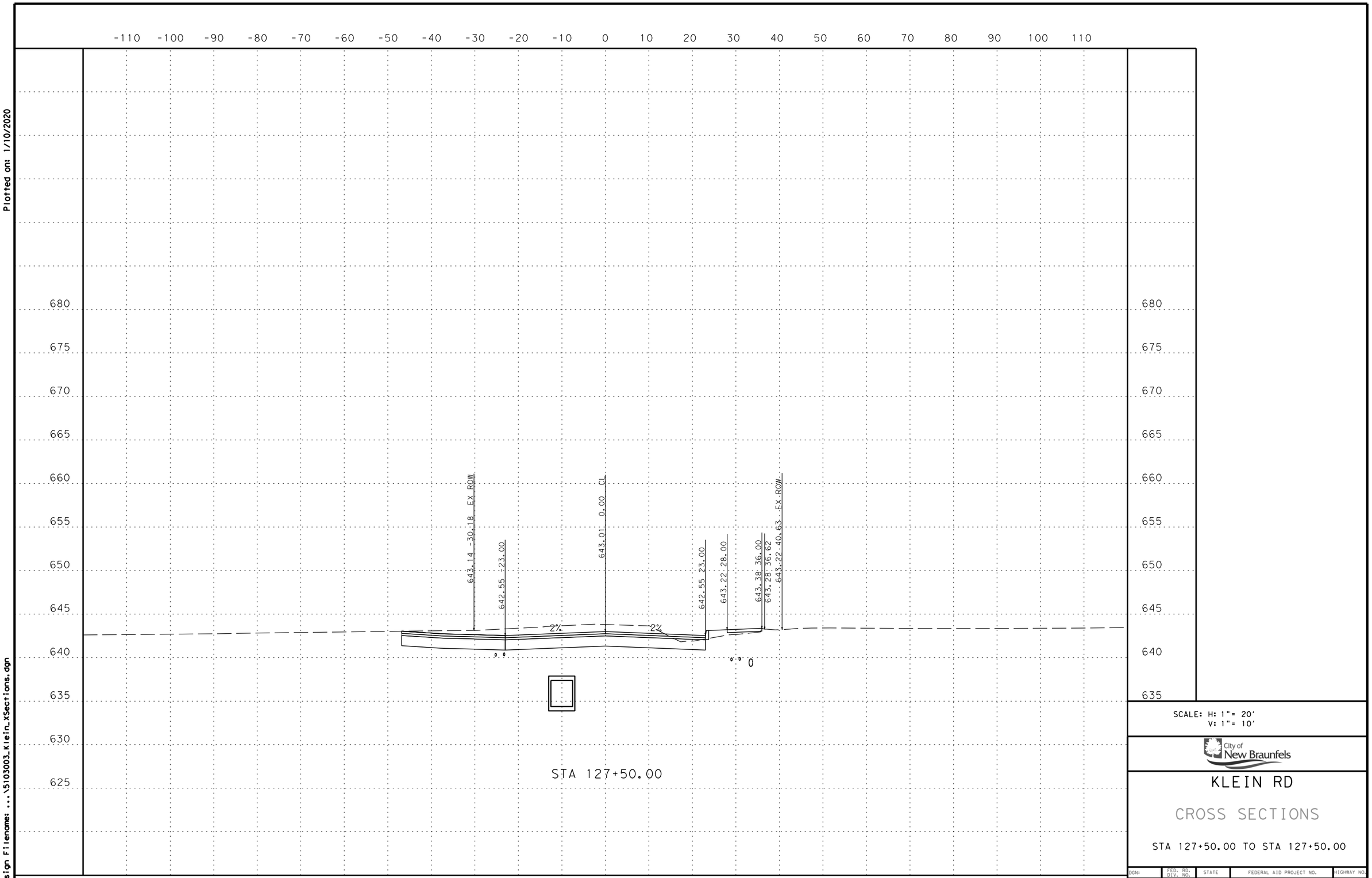

SCALE: H: 1"= 20'
V: 1"= 10'

City of New Braunfels

KLEIN RD

CROSS SECTIONS

STA 127+50.00 TO STA 127+50.00

DGN:	FED. RD. DIV. NO.	STATE	FEDERAL AID PROJECT NO.			HIGHWAY NO.
CHK DGN:	21	TEXAS				KLEIN RD
DWG:	DIST.	COUNTY	CONT. NO.	SECT. NO.	JOB NO.	SHEET NO.
CHK DWG:	SAT	GUADALUPE				

Plotted on: 1/10/2020

Design Filename: ...\5103003_Klein_XSections.dgn

SCALE: H: 1"= 20'
V: 1"= 10'

City of New Braunfels

KLEIN RD

CROSS SECTIONS

STA 128+00.00 TO STA 128+00.00

DGN:	FED. RD. DIV. NO.	STATE	FEDERAL AID PROJECT NO.			HIGHWAY NO.
CHK DGN:	21	TEXAS				KLEIN RD
DWG:	DIST.	COUNTY	CONT. NO.	SECT. NO.	JOB NO.	SHEET NO.
CHK DWG:	SAT	GUADALUPE				

Plotted on: 1/10/2020

Design Filename: ...\5103003_Klein_XSections.dgn

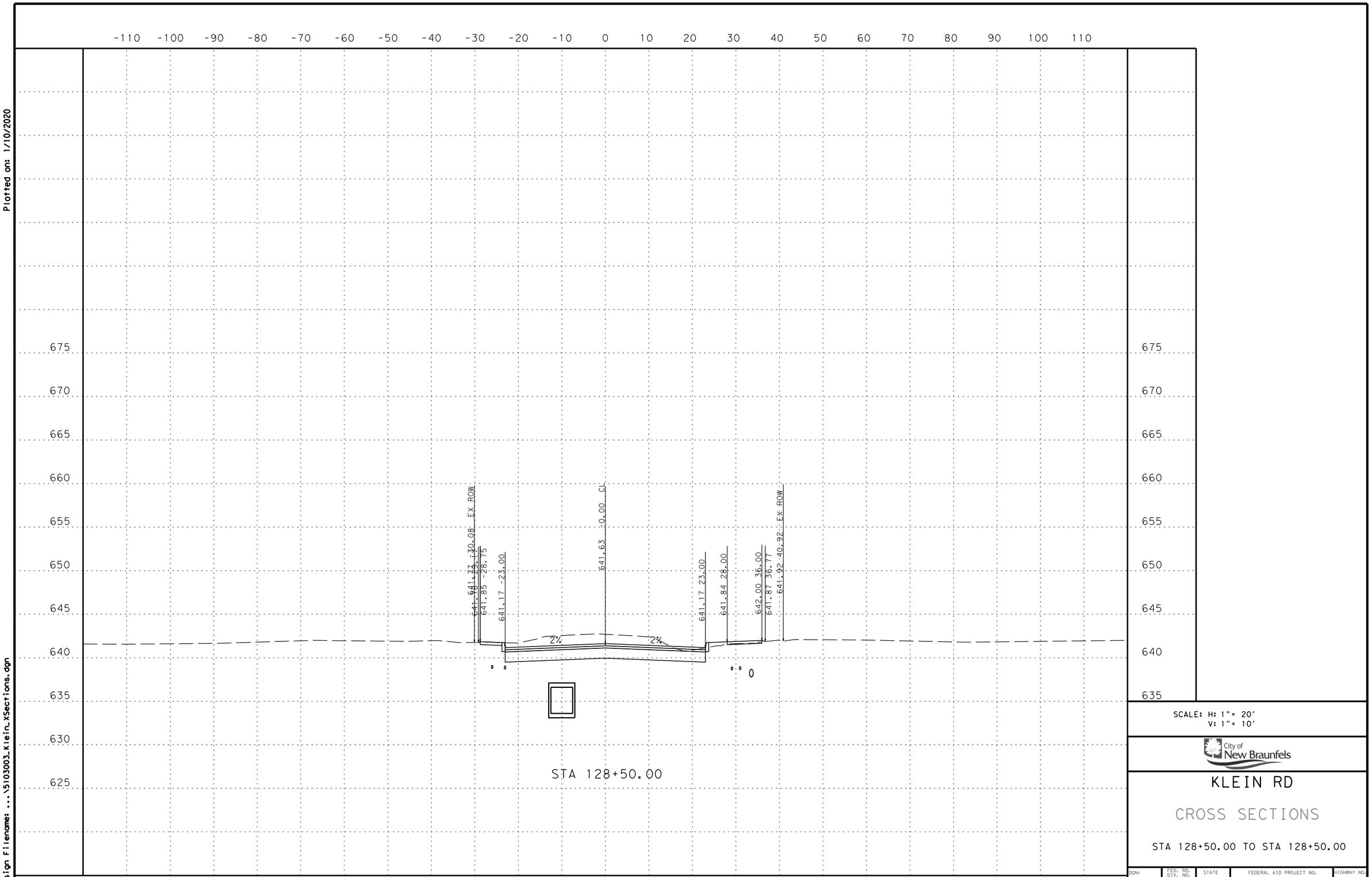

SCALE: H: 1" = 20'
V: 1" = 10'

City of New Braunfels

KLEIN RD

CROSS SECTIONS

STA 128+50.00 TO STA 128+50.00

DGN:	FED. RD. DIV. NO.	STATE	FEDERAL AID PROJECT NO.			HIGHWAY NO.
CHK DGN:	21	TEXAS				KLEIN RD
DWG:	DIST.	COUNTY	CONT. NO.	SECT. NO.	JOB NO.	SHEET NO.
CHK DWG:	SAT	GUADALUPE				

Plotted on: 1/10/2020

Design Filename: ...\5103003_Klein_XSections.dgn

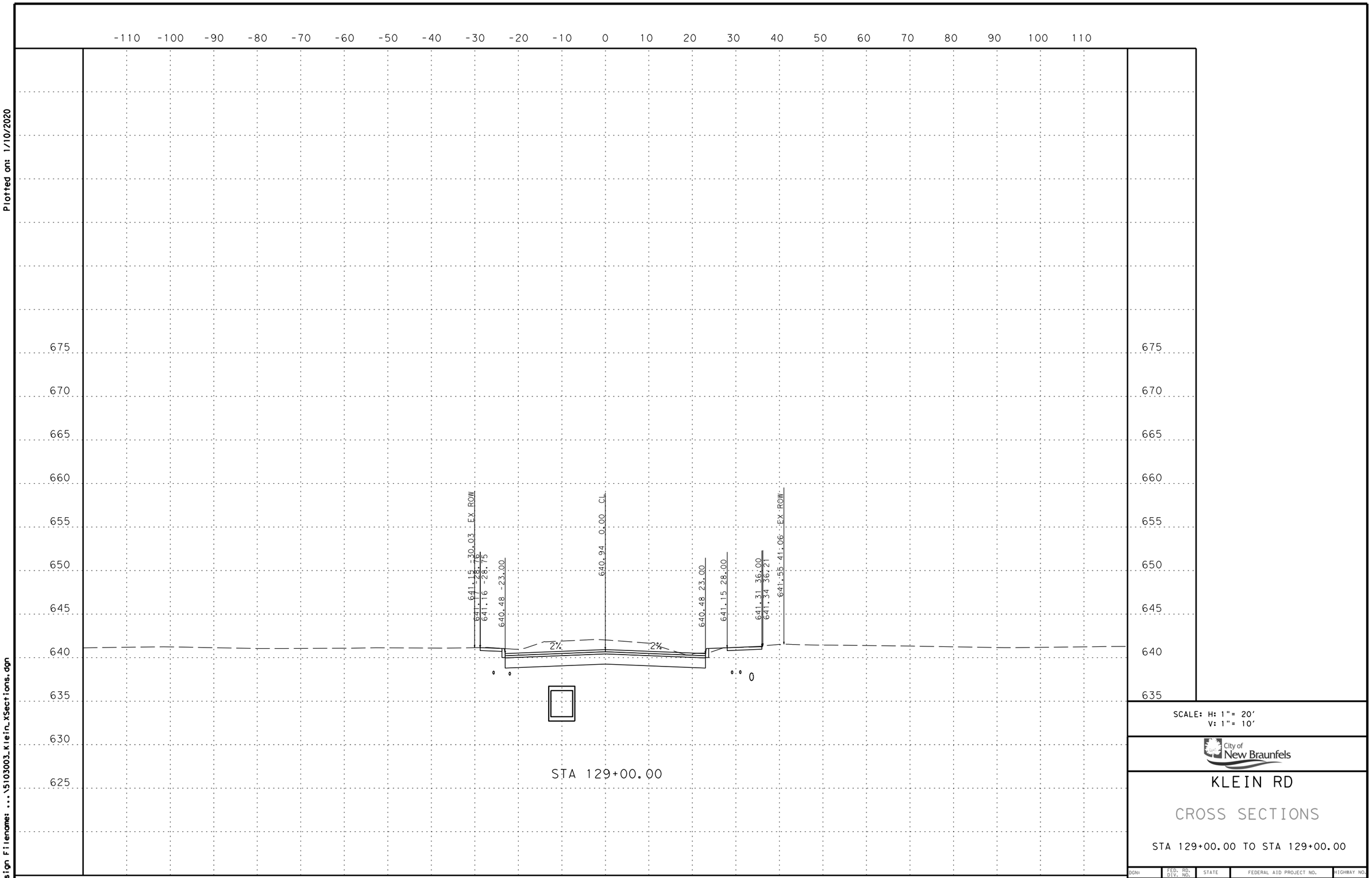

SCALE: H: 1"= 20'
V: 1"= 10'

City of New Braunfels

KLEIN RD

CROSS SECTIONS

STA 129+00.00 TO STA 129+00.00

DGN:	FED. RD. DIV. NO.	STATE	FEDERAL AID PROJECT NO.			HIGHWAY NO.
CHK DGN:	21	TEXAS				KLEIN RD
DWG:	DIST.	COUNTY	CONT. NO.	SECT. NO.	JOB NO.	SHEET NO.
CHK DWG:	SAT	GUADALUPE				

Plotted on: 1/10/2020

Design Filename: ...\5103003_Klein_XSections.dgn

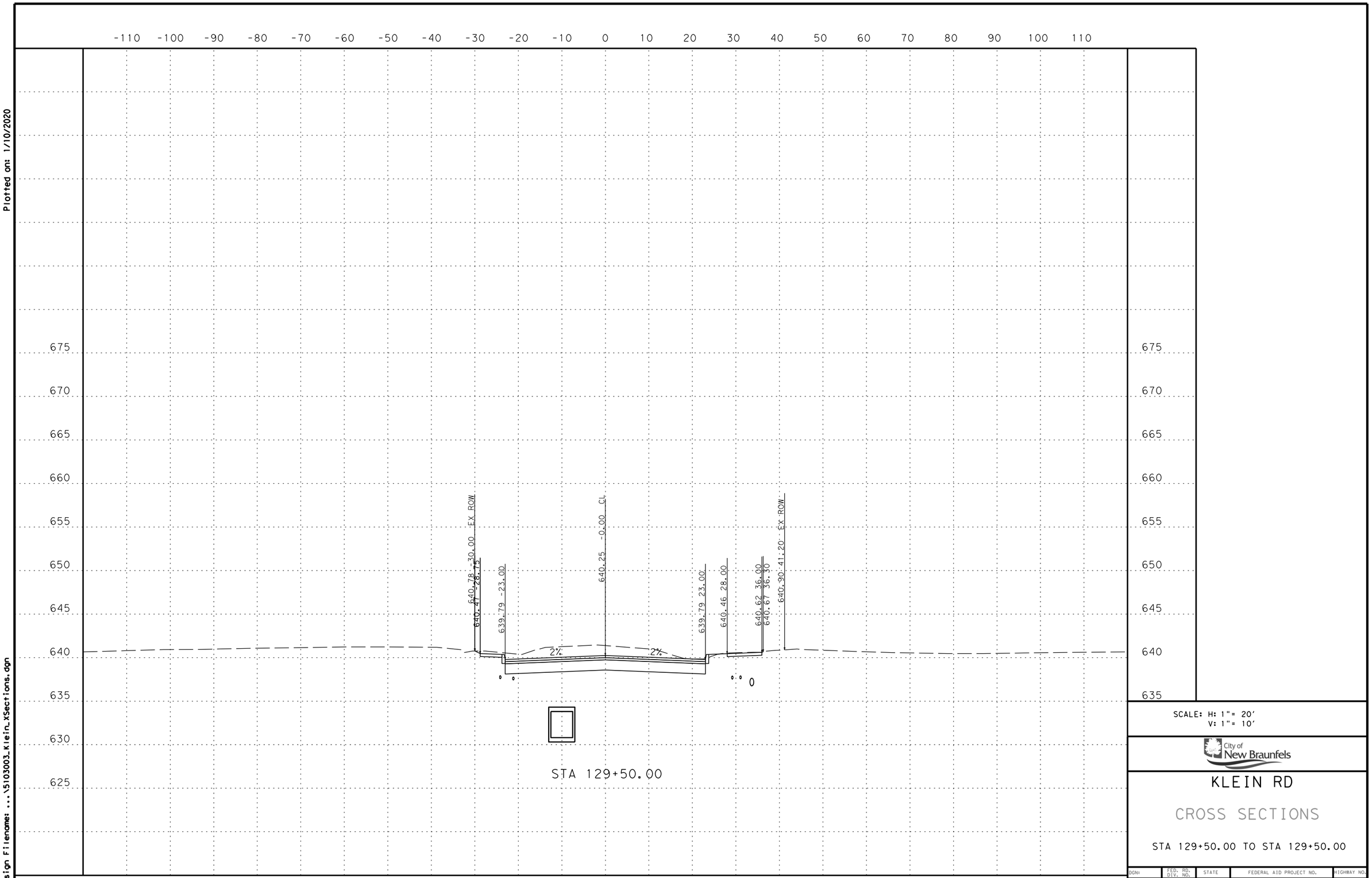

SCALE: H: 1" = 20'
V: 1" = 10'

City of New Braunfels

KLEIN RD

CROSS SECTIONS

STA 129+50.00 TO STA 129+50.00

DGN:	FED. RD. DIV. NO.	STATE	FEDERAL AID PROJECT NO.			HIGHWAY NO.
CHK DGN:	21	TEXAS				KLEIN RD
DWG:	DIST.	COUNTY	CONT. NO.	SECT. NO.	JOB NO.	SHEET NO.
CHK DWG:	SAT	GUADALUPE				

Plotted on: 1/10/2020

Design Filename: ...\5103003_Klein_XSections.dgn

SCALE: H: 1"= 20'
V: 1"= 10'

City of New Braunfels

KLEIN RD

CROSS SECTIONS

STA 130+00.00 TO STA 130+00.00

DGN:	FED. RD. DIV. NO.	STATE	FEDERAL AID PROJECT NO.			HIGHWAY NO.
CHK DGN:	21	TEXAS				KLEIN RD
DWG:	DIST.	COUNTY	CONT. NO.	SECT. NO.	JOB NO.	SHEET NO.
CHK DWG:	SAT	GUADALUPE				

Plotted on: 1/10/2020

Design Filename: ...\5103003_Klein_XSections.dgn

SCALE: H: 1"= 20'
V: 1"= 10'

City of New Braunfels

KLEIN RD

CROSS SECTIONS

STA 130+50.00 TO STA 130+50.00

DGN:	FED. RD. DIV. NO.	STATE	FEDERAL AID PROJECT NO.				HIGHWAY NO.
CHK DGN:	21	TEXAS					KLEIN RD
DWG:	DIST.	COUNTY	CONT. NO.	SECT. NO.	JOB NO.		SHEET NO.
CHK DWG:	SAT	GUADALUPE					

Plotted on: 1/10/2020

Design Filename: ...\5103003_Klein_XSections.dgn

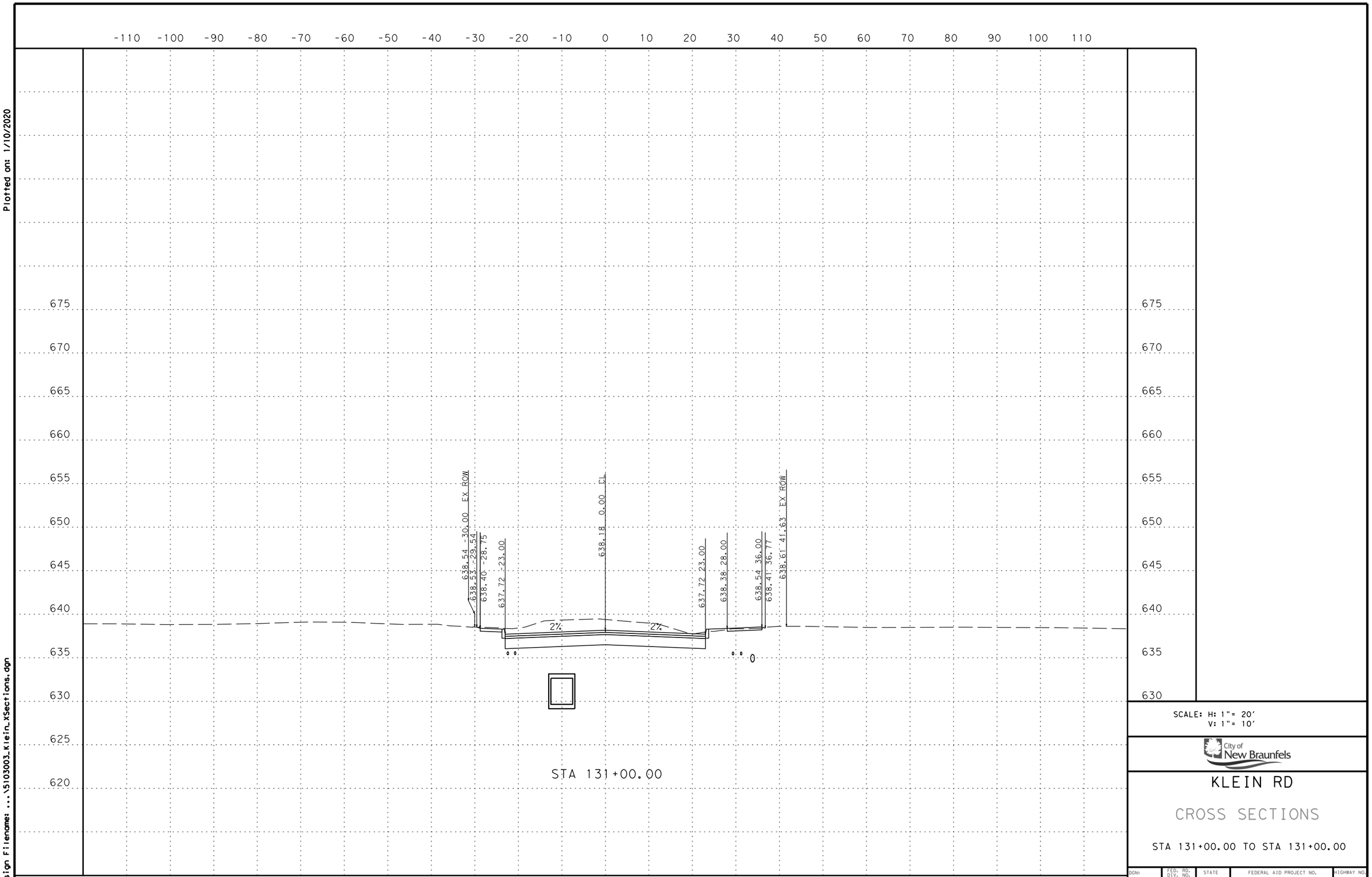

SCALE: H: 1" = 20'
V: 1" = 10'

City of New Braunfels

KLEIN RD

CROSS SECTIONS

STA 131+00.00 TO STA 131+00.00

DGN:	FED. RD. DIV. NO.	STATE	FEDERAL AID PROJECT NO.			HIGHWAY NO.
CHK DGN:	21	TEXAS				KLEIN RD
DWG:	DIST.	COUNTY	CONT. NO.	SECT. NO.	JOB NO.	SHEET NO.
CHK DWG:	SAT	GUADALUPE				

Plotted on: 1/10/2020

Design Filename: ...\5103003_Klein_XSections.dgn

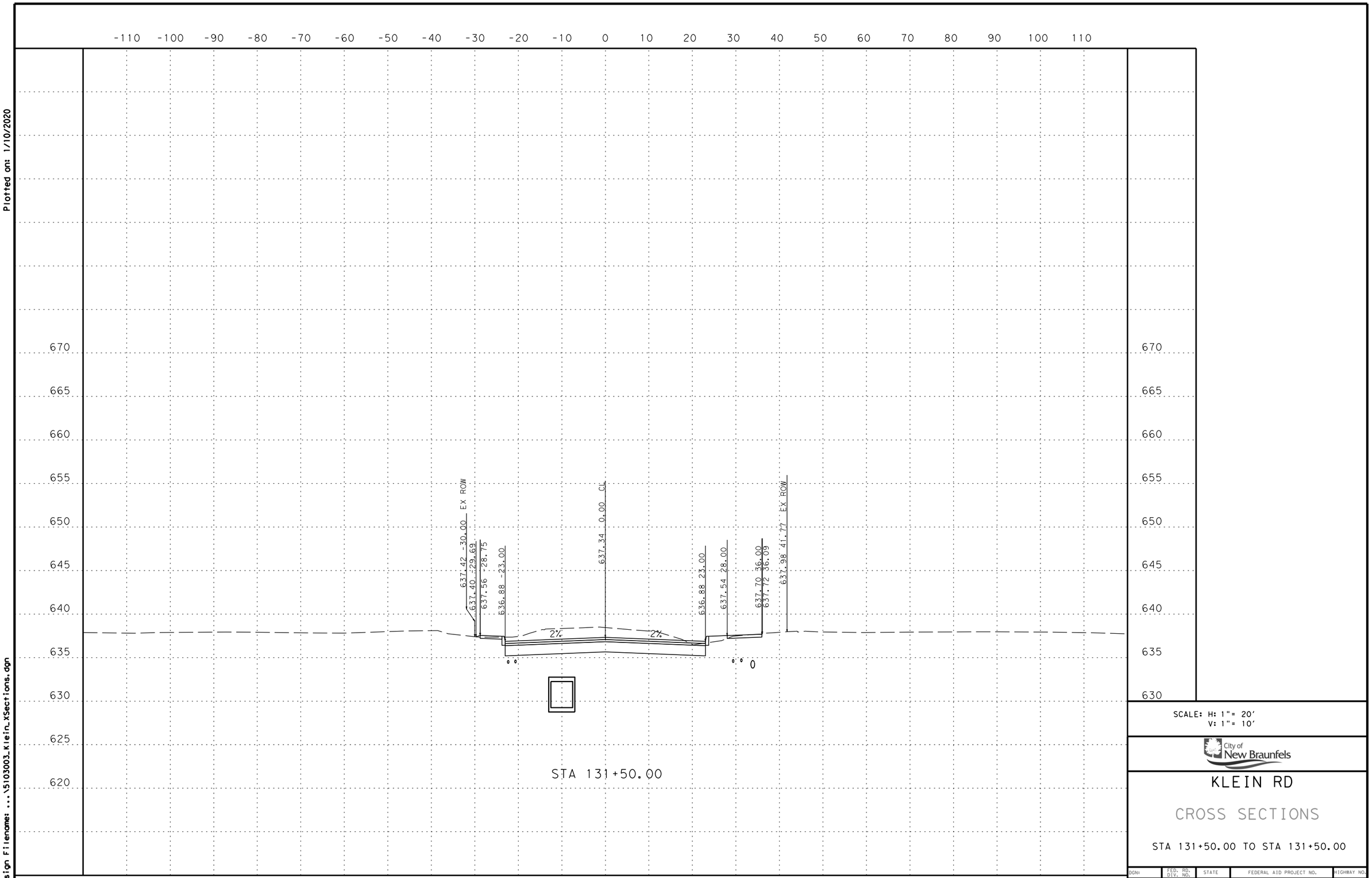

SCALE: H: 1"= 20'
V: 1"= 10'

City of New Braunfels

KLEIN RD

CROSS SECTIONS

STA 131+50.00 TO STA 131+50.00

DGN:	FED. RD. DIV. NO.	STATE	FEDERAL AID PROJECT NO.			HIGHWAY NO.
CHK DGN:	21	TEXAS				KLEIN RD
DWG:	DIST.	COUNTY	CONT. NO.	SECT. NO.	JOB NO.	SHEET NO.
CHK DWG:	SAT	GUADALUPE				

Plotted on: 1/10/2020

Design Filename: ...\5103003_Klein_XSections.dgn

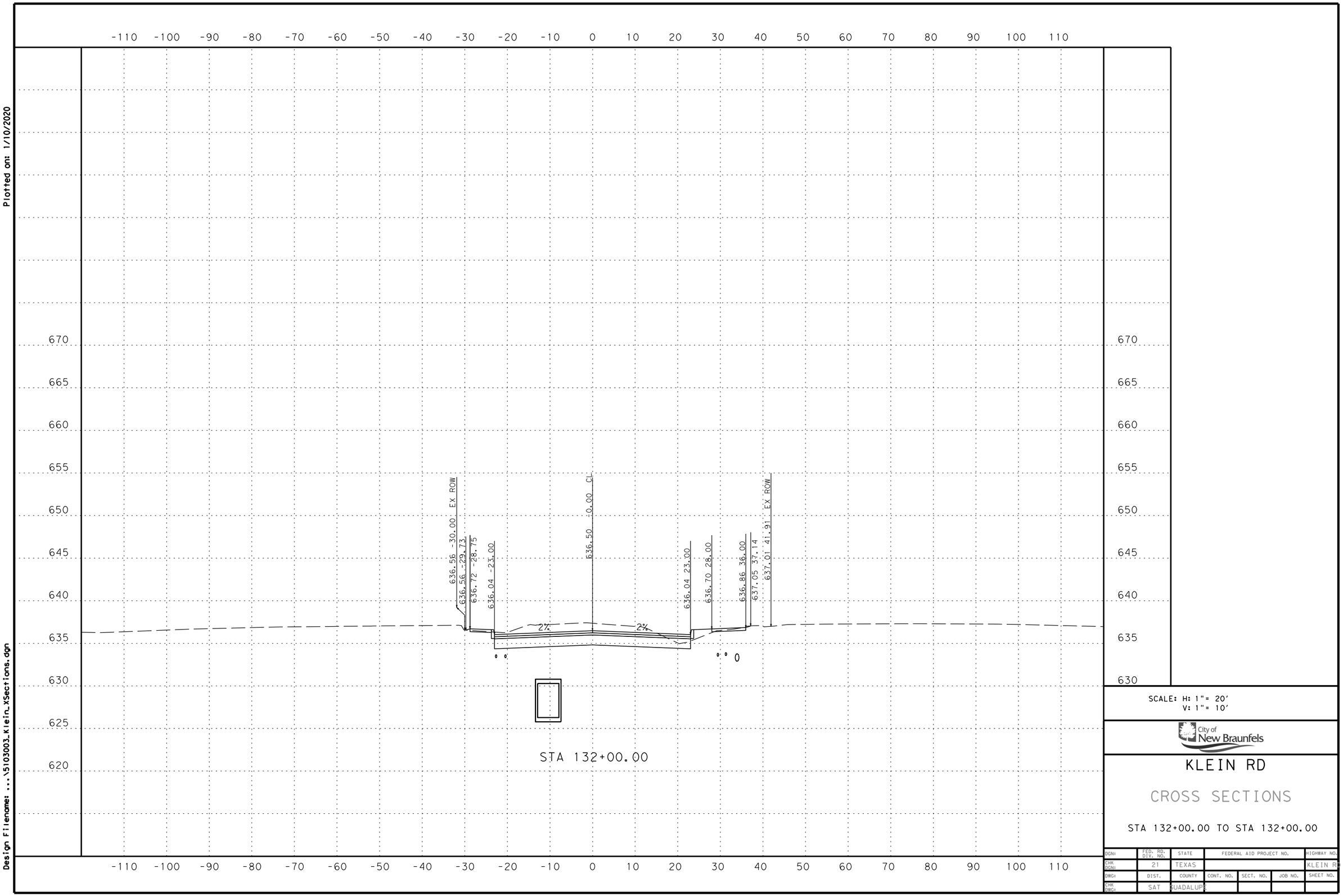

SCALE: H: 1"= 20'
V: 1"= 10'

City of New Braunfels

KLEIN RD

CROSS SECTIONS

STA 132+00.00 TO STA 132+00.00

DGN:	FED. RD. DIV. NO.	STATE	FEDERAL AID PROJECT NO.			HIGHWAY NO.
CHK DGN:	21	TEXAS				KLEIN RD
DWG:	DIST.	COUNTY	CONT. NO.	SECT. NO.	JOB NO.	SHEET NO.
CHK DWG:	SAT	GUADALUPE				

Plotted on: 1/10/2020

Design Filename: ...\5103003_Klein_XSections.dgn

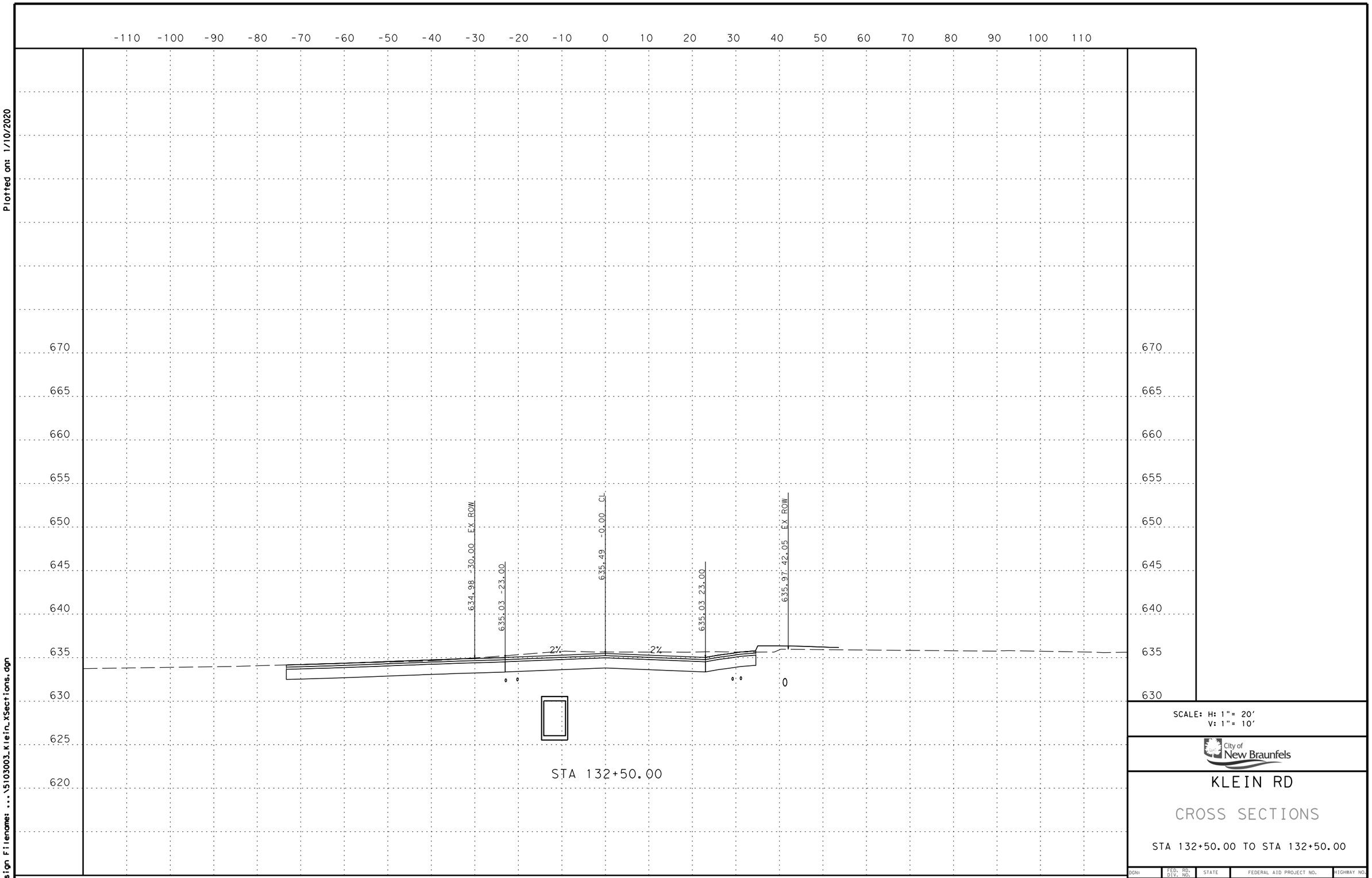

SCALE: H: 1"= 20'
V: 1"= 10'

City of New Braunfels

KLEIN RD

CROSS SECTIONS

STA 132+50.00 TO STA 132+50.00

DGN:	FED. RD. DIV. NO.	STATE	FEDERAL AID PROJECT NO.				HIGHWAY NO.
CHK DGN:	21	TEXAS					KLEIN RD
DWG:	DIST.	COUNTY	CONT. NO.	SECT. NO.	JOB NO.		SHEET NO.
CHK DWG:	SAT	GUADALUPE					

Plotted on: 1/10/2020

Design Filename: ...\5103003_Klein_XSections.dgn

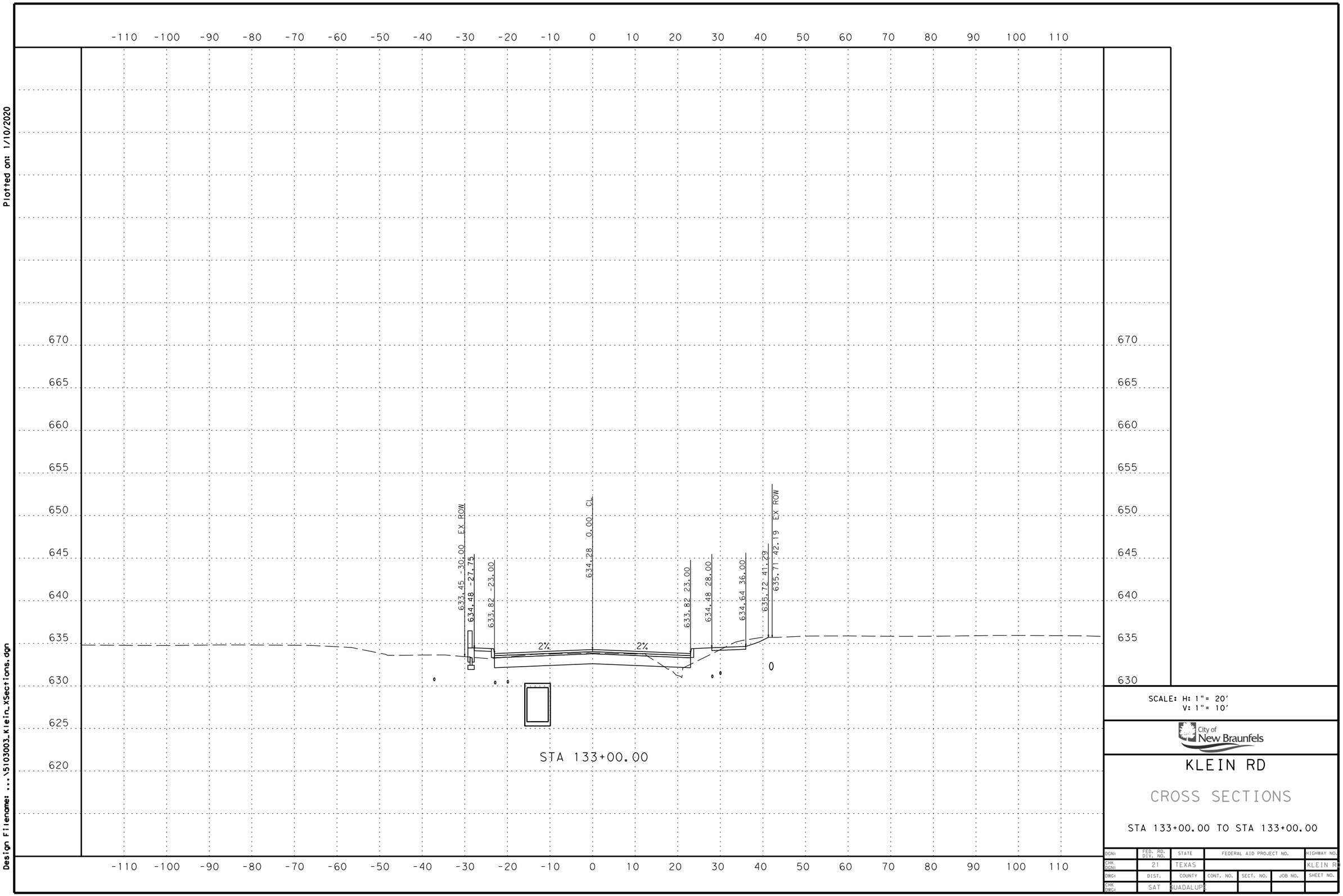

SCALE: H: 1" = 20'
V: 1" = 10'

City of New Braunfels

KLEIN RD

CROSS SECTIONS

STA 133+00.00 TO STA 133+00.00

DGN:	FED. RD. DIV. NO.	STATE	FEDERAL AID PROJECT NO.			HIGHWAY NO.
CHK DGN:	21	TEXAS				KLEIN RD
DWG:	DIST.	COUNTY	CONT. NO.	SECT. NO.	JOB NO.	SHEET NO.
CHK DWG:	SAT	GUADALUPE				

Plotted on: 1/10/2020

Design Filename: ...\5103003_Klein_XSections.dgn

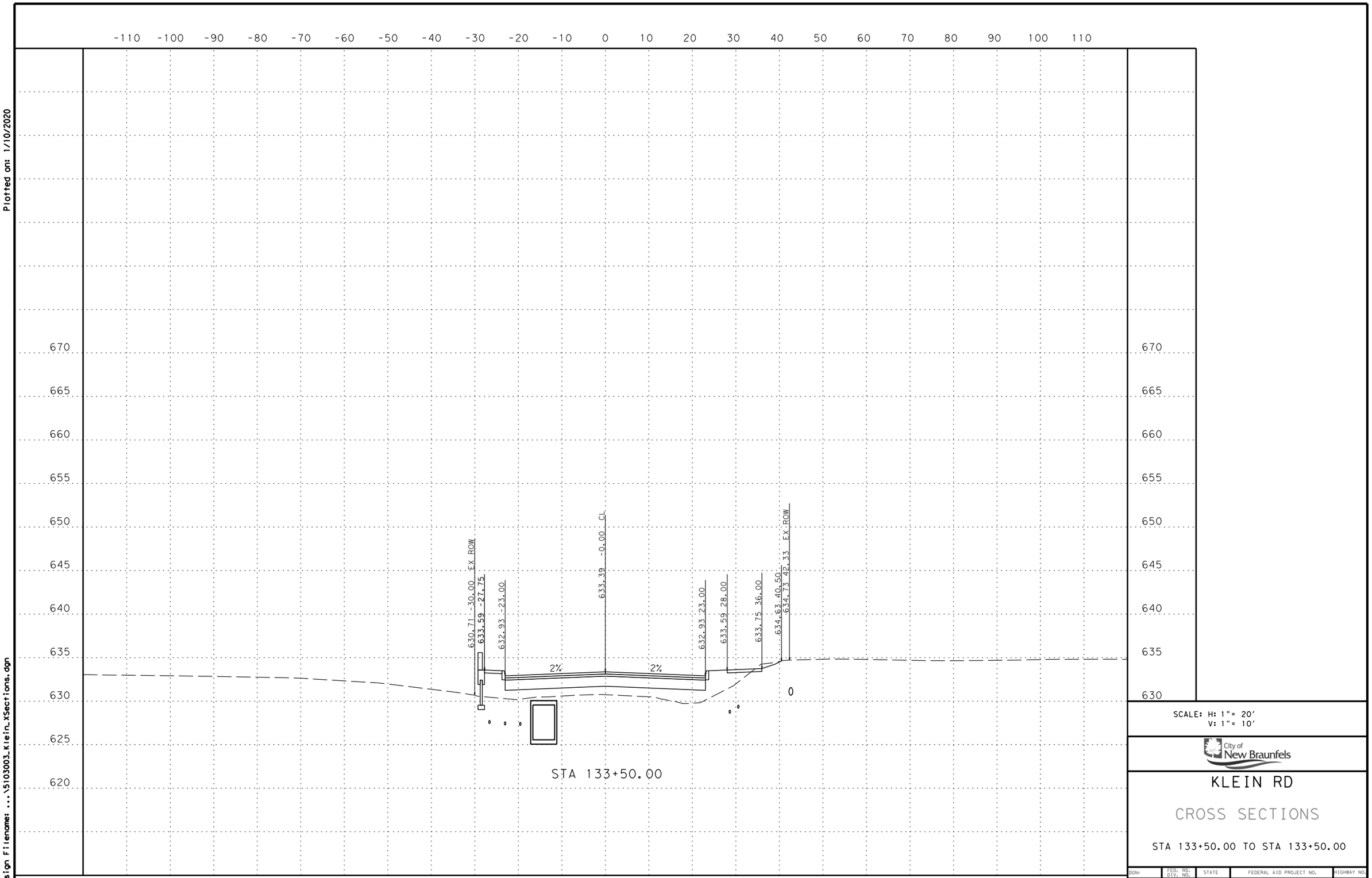

SCALE: H: 1"= 20'
V: 1"= 10'

City of New Braunfels

KLEIN RD

CROSS SECTIONS

STA 133+50.00 TO STA 133+50.00

DGN:	FED. RD. DIV. NO.	STATE	FEDERAL AID PROJECT NO.			HIGHWAY NO.
CHK DGN:	21	TEXAS				KLEIN RD
DWG:	DIST.	COUNTY	CONT. NO.	SECT. NO.	JOB NO.	SHEET NO.
CHK DWG:	SAT	GUADALUPE				

Plotted on: 1/10/2020

Design Filename: ...\5103003_Klein_XSections.dgn

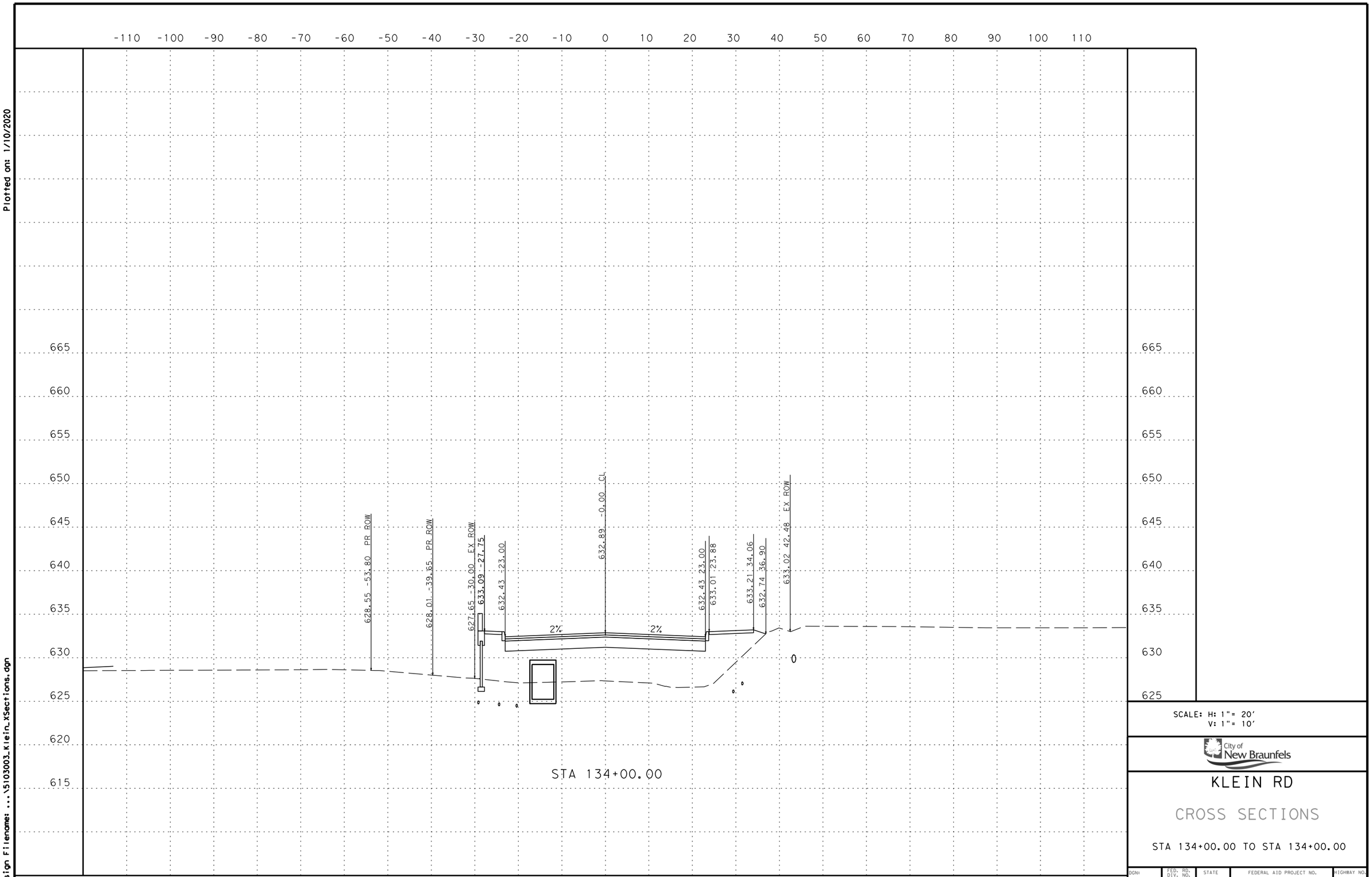

SCALE: H: 1"= 20'
V: 1"= 10'

City of New Braunfels

KLEIN RD

CROSS SECTIONS

STA 134+00.00 TO STA 134+00.00

DGN:	FED. RD. DIV. NO.	STATE	FEDERAL AID PROJECT NO.			HIGHWAY NO.
CHK DGN:	21	TEXAS				KLEIN RD
DWG:	DIST.	COUNTY	CONT. NO.	SECT. NO.	JOB NO.	SHEET NO.
CHK DWG:	SAT	GUADALUPE				

Plotted on: 1/10/2020

Design Filename: ...\5103003_Klein_XSections.dgn

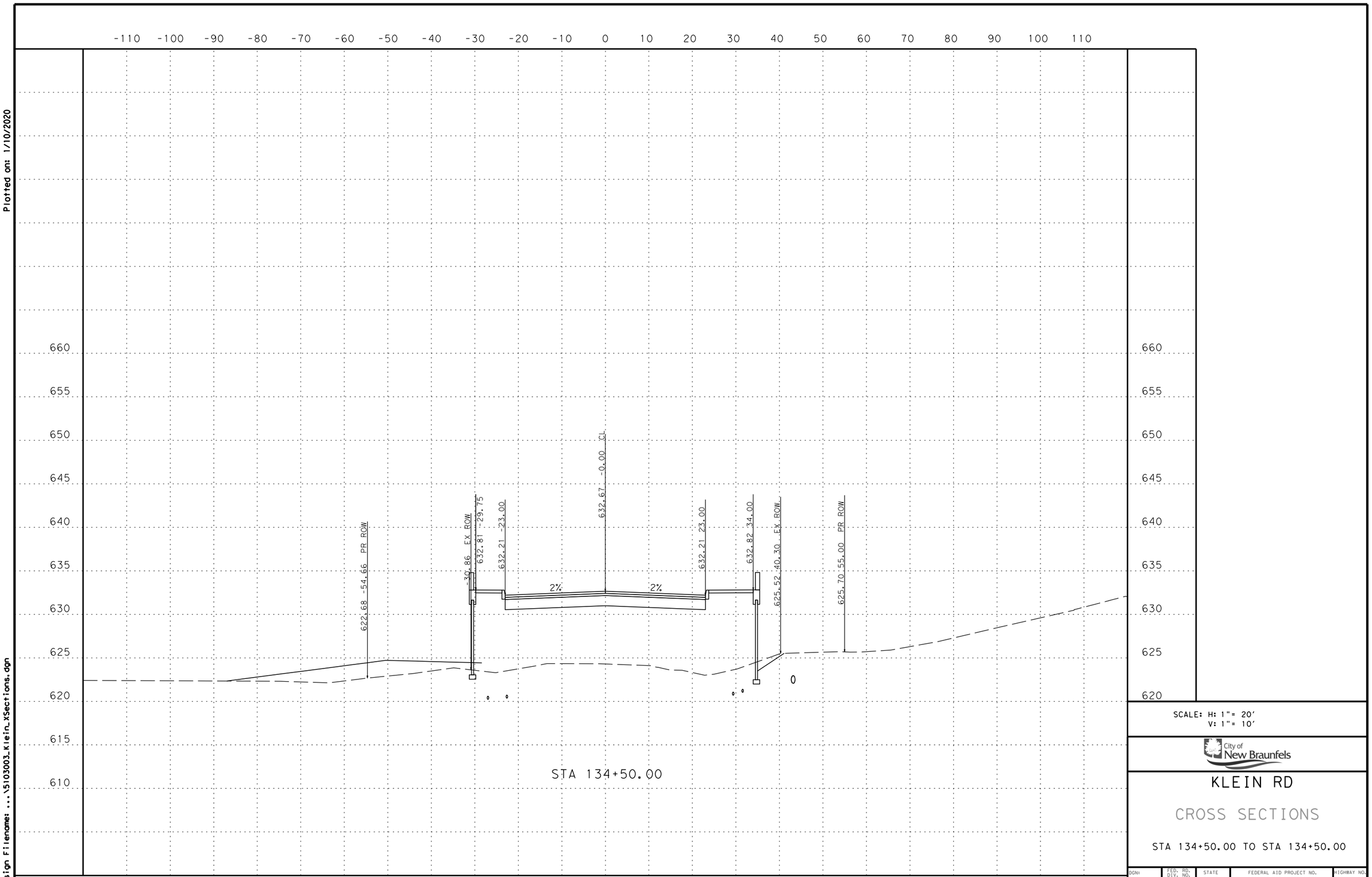

SCALE: H: 1"= 20'
V: 1"= 10'

City of New Braunfels

KLEIN RD

CROSS SECTIONS

STA 134+50.00 TO STA 134+50.00

DGN:	FED. RD. DIV. NO.	STATE	FEDERAL AID PROJECT NO.			HIGHWAY NO.
CHK DGN:	21	TEXAS				KLEIN RD
DWG:	DIST.	COUNTY	CONT. NO.	SECT. NO.	JOB NO.	SHEET NO.
CHK DWG:	SAT	GUADALUPE				

Plotted on: 1/10/2020

Design Filename: ...\5103003_Klein_XSections.dgn

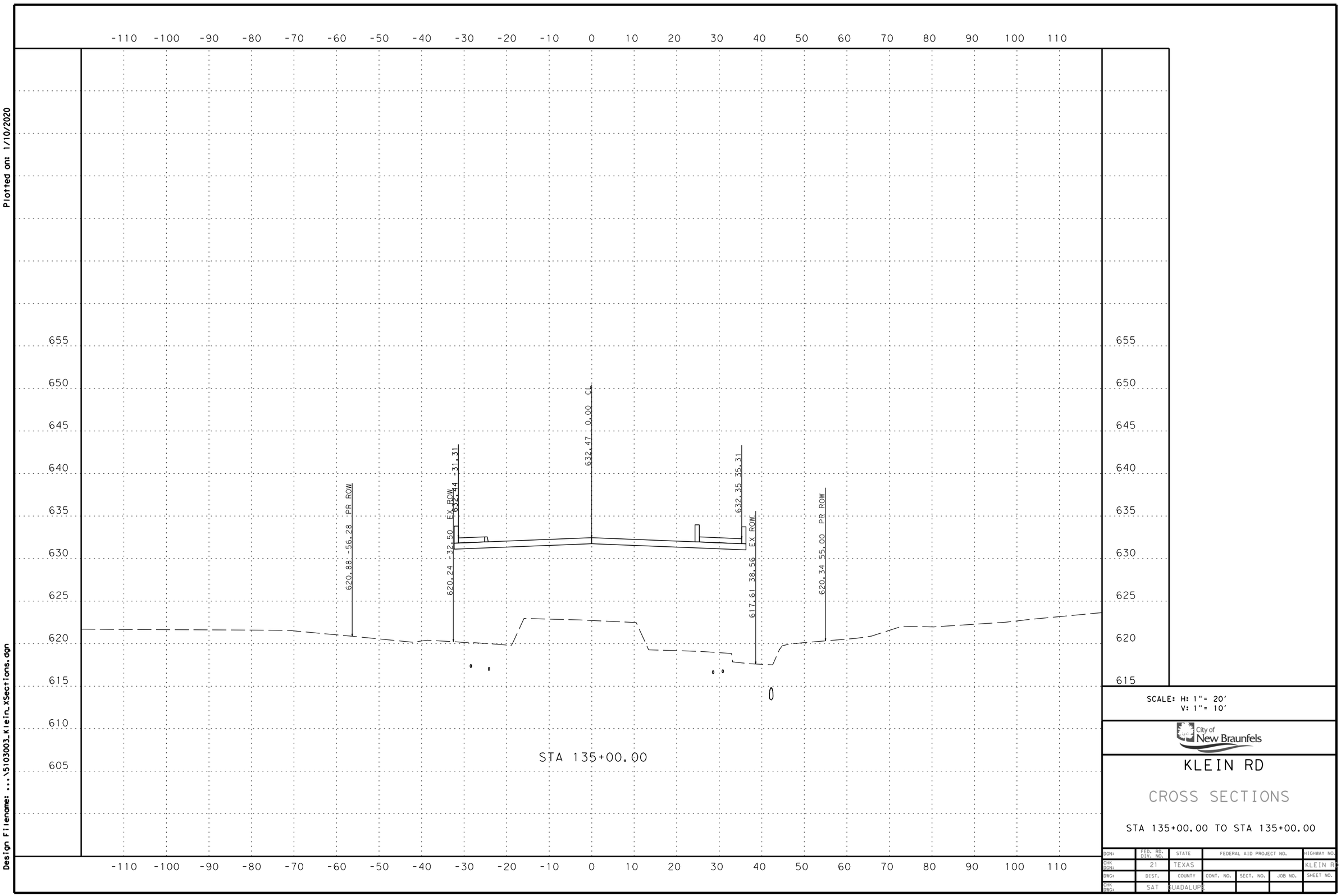

SCALE: H: 1"= 20'
V: 1"= 10'

City of New Braunfels

KLEIN RD

CROSS SECTIONS

STA 135+00.00 TO STA 135+00.00

DGN:	FED. RD. DIV. NO.	STATE	FEDERAL AID PROJECT NO.			HIGHWAY NO.
CHK DGN:	21	TEXAS				KLEIN RD
DWG:	DIST.	COUNTY	CONT. NO.	SECT. NO.	JOB NO.	SHEET NO.
CHK DWG:	SAT	GUADALUPE				

Plotted on: 1/10/2020

Design Filename: ...\5103003_Klein_XSections.dgn

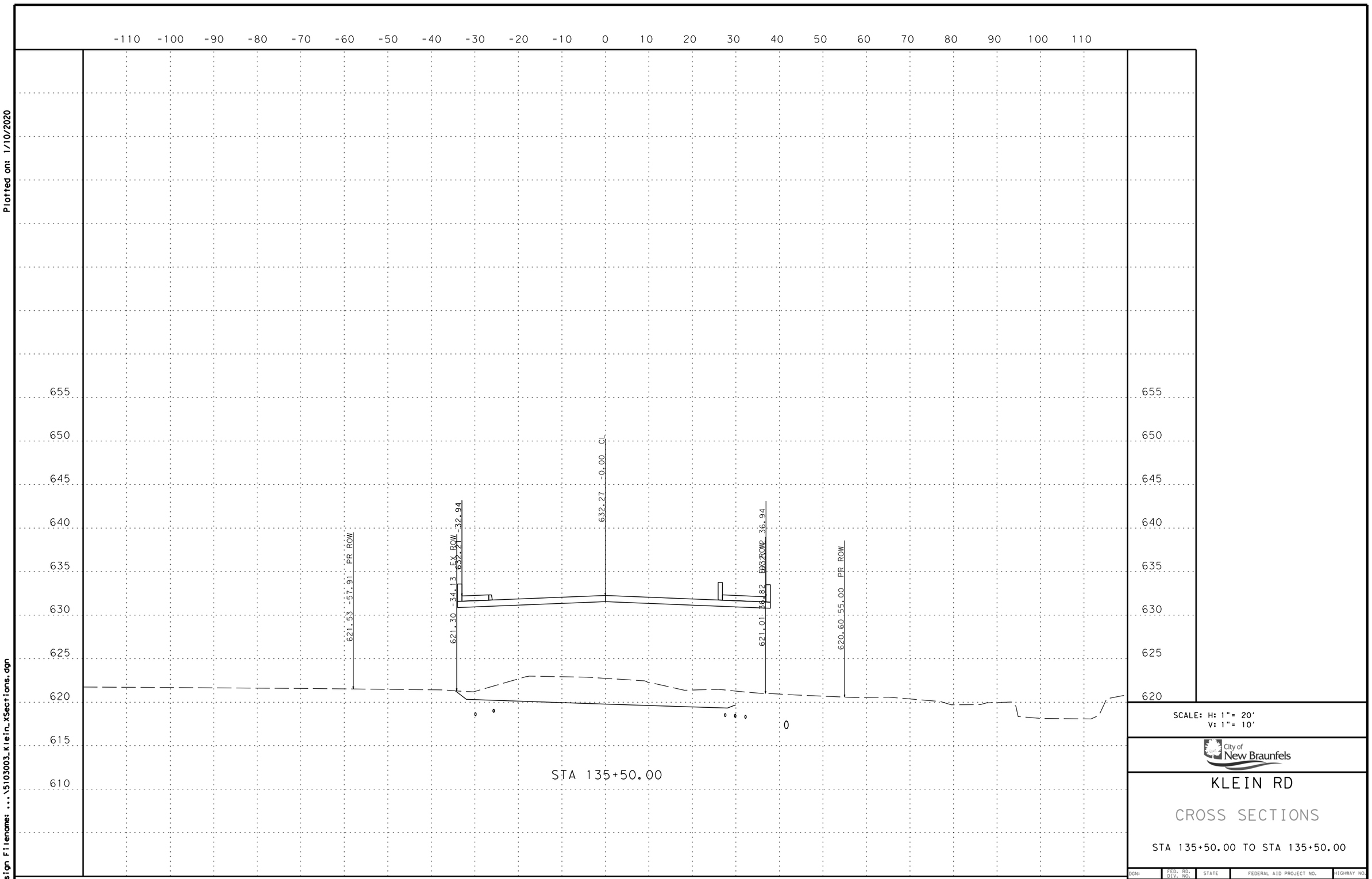

SCALE: H: 1"= 20'
V: 1"= 10'

City of New Braunfels

KLEIN RD

CROSS SECTIONS

STA 135+50.00 TO STA 135+50.00

DGN:	FED. RD. DIV. NO.	STATE	FEDERAL AID PROJECT NO.			HIGHWAY NO.
CHK DGN:	21	TEXAS				KLEIN RD
DWG:	DIST.	COUNTY	CONT. NO.	SECT. NO.	JOB NO.	SHEET NO.
CHK DWG:	SAT	GUADALUPE				

Plotted on: 1/10/2020

Design Filename: ...\5103003_Klein_XSections.dgn

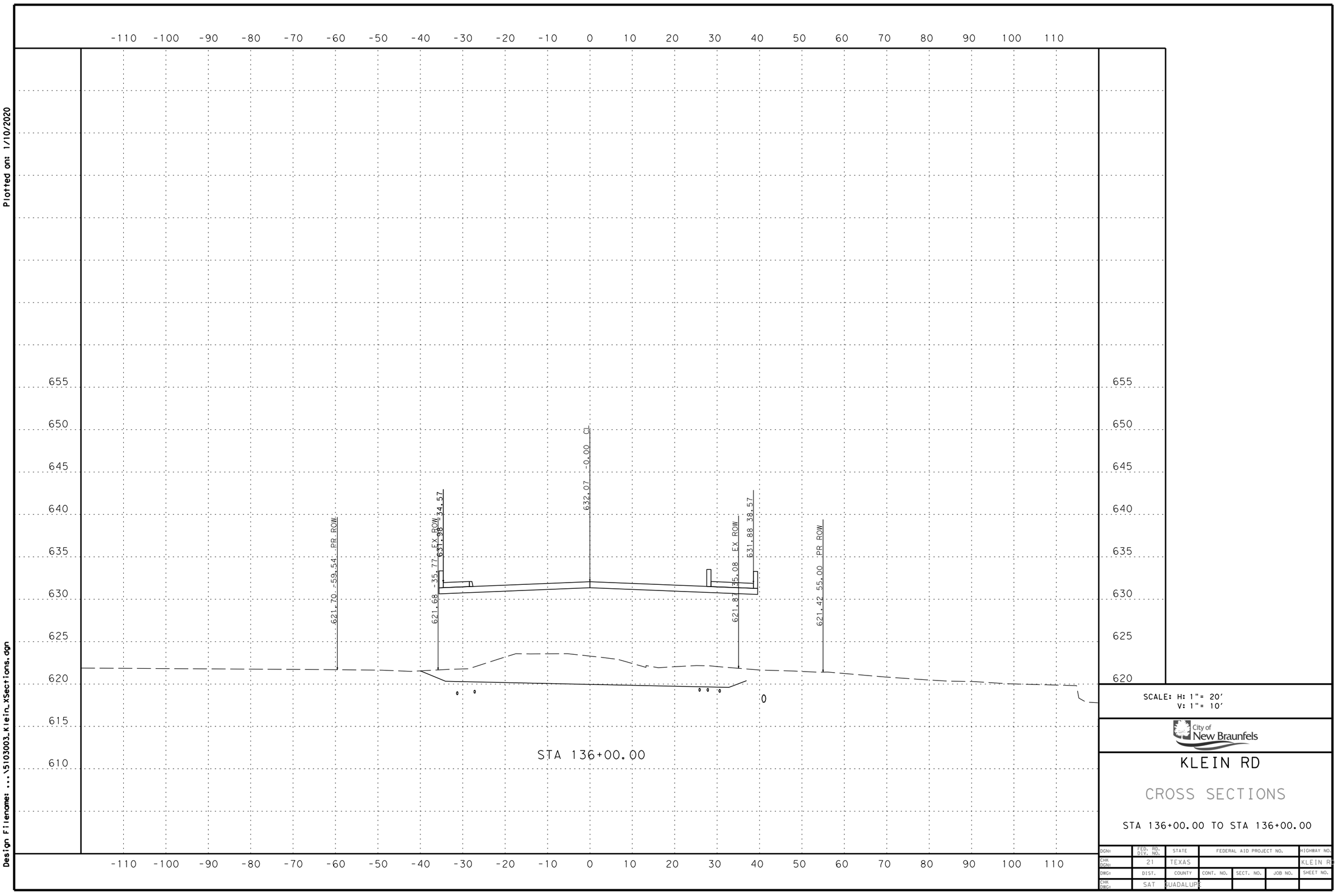

STA 136+00.00

SCALE: H: 1"= 20'
V: 1"= 10'

City of New Braunfels

KLEIN RD

CROSS SECTIONS

STA 136+00.00 TO STA 136+00.00

DGN:	FED. RD. DIV. NO.	STATE	FEDERAL AID PROJECT NO.			HIGHWAY NO.
CHK DGN:	21	TEXAS				KLEIN RD
DWG:	DIST.	COUNTY	CONT. NO.	SECT. NO.	JOB NO.	SHEET NO.
CHK DWG:	SAT	GUADALUPE				

Plotted on: 1/10/2020

Design Filename: ...\5103003_Klein_XSections.dgn

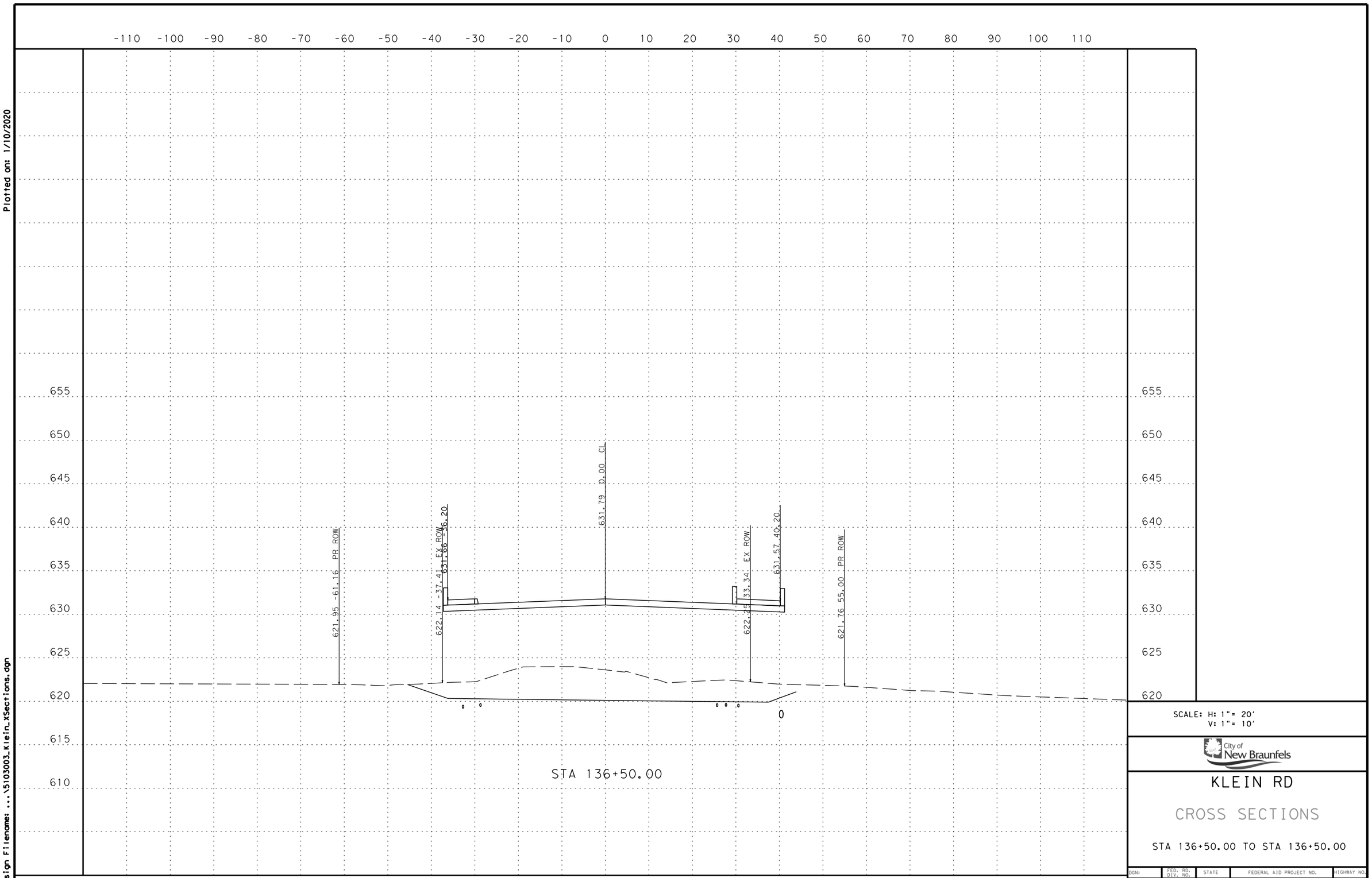

STA 136+50.00

SCALE: H: 1" = 20'
V: 1" = 10'

City of New Braunfels

KLEIN RD

CROSS SECTIONS

STA 136+50.00 TO STA 136+50.00

DGN:	FED. RD. DIV. NO.	STATE	FEDERAL AID PROJECT NO.			HIGHWAY NO.
CHK DGN:	21	TEXAS				KLEIN RD
DWG:	DIST.	COUNTY	CONT. NO.	SECT. NO.	JOB NO.	SHEET NO.
CHK DWG:	SAT	GUADALUPE				

Plotted on: 1/10/2020

Design Filename: ...\5103003_Klein_XSections.dgn

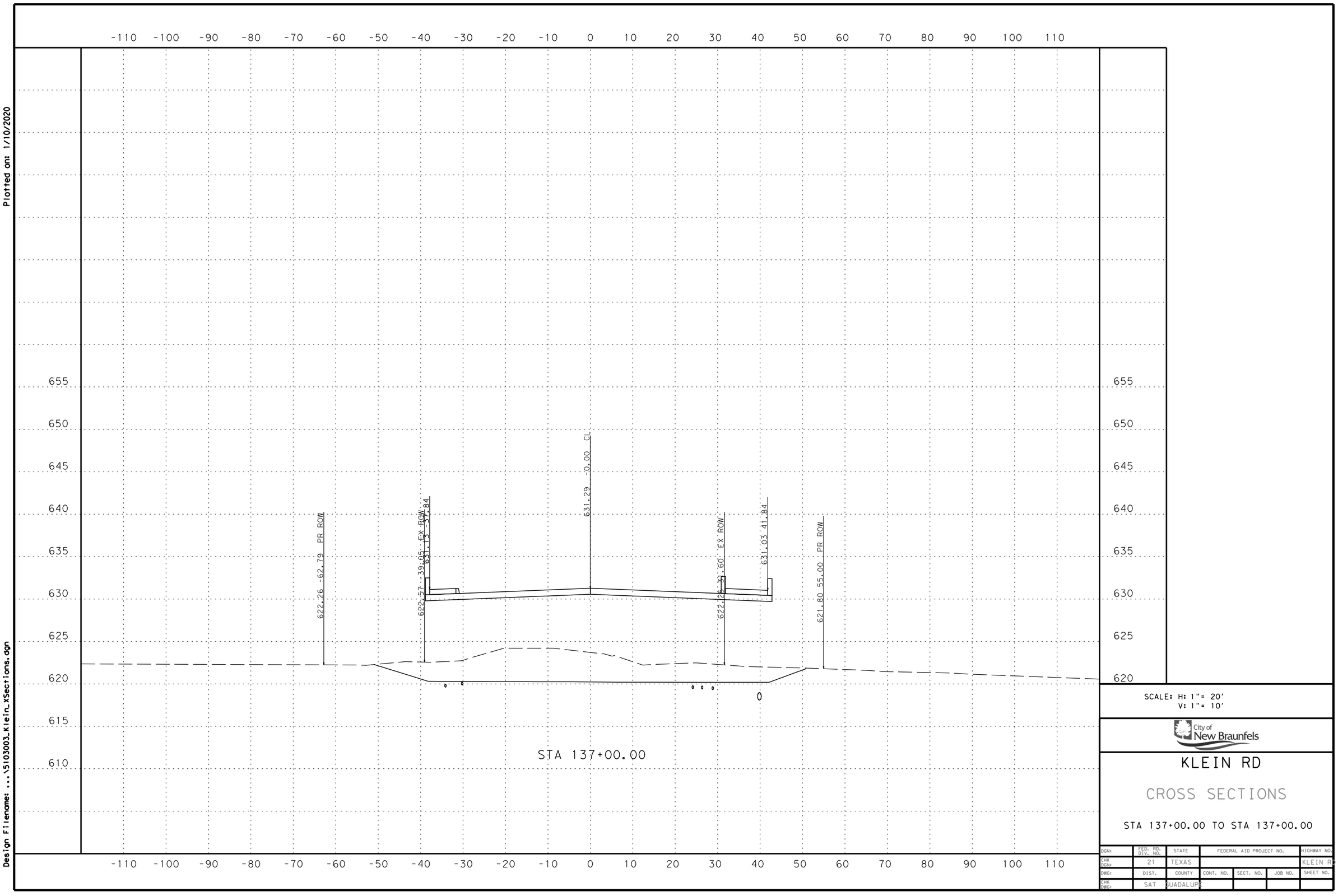

SCALE: H: 1" = 20'
V: 1" = 10'

City of New Braunfels

KLEIN RD

CROSS SECTIONS

STA 137+00.00 TO STA 137+00.00

DGN:	FED. RD. DIV. NO.	STATE	FEDERAL AID PROJECT NO.			HIGHWAY NO.
CHK DGN:	21	TEXAS				KLEIN RD
DWG:	DIST.	COUNTY	CONT. NO.	SECT. NO.	JOB NO.	SHEET NO.
CHK DWG:	SAT	GUADALUPE				

Plotted on: 1/10/2020

Design Filename: ...\5103003_Klein_XSections.dgn

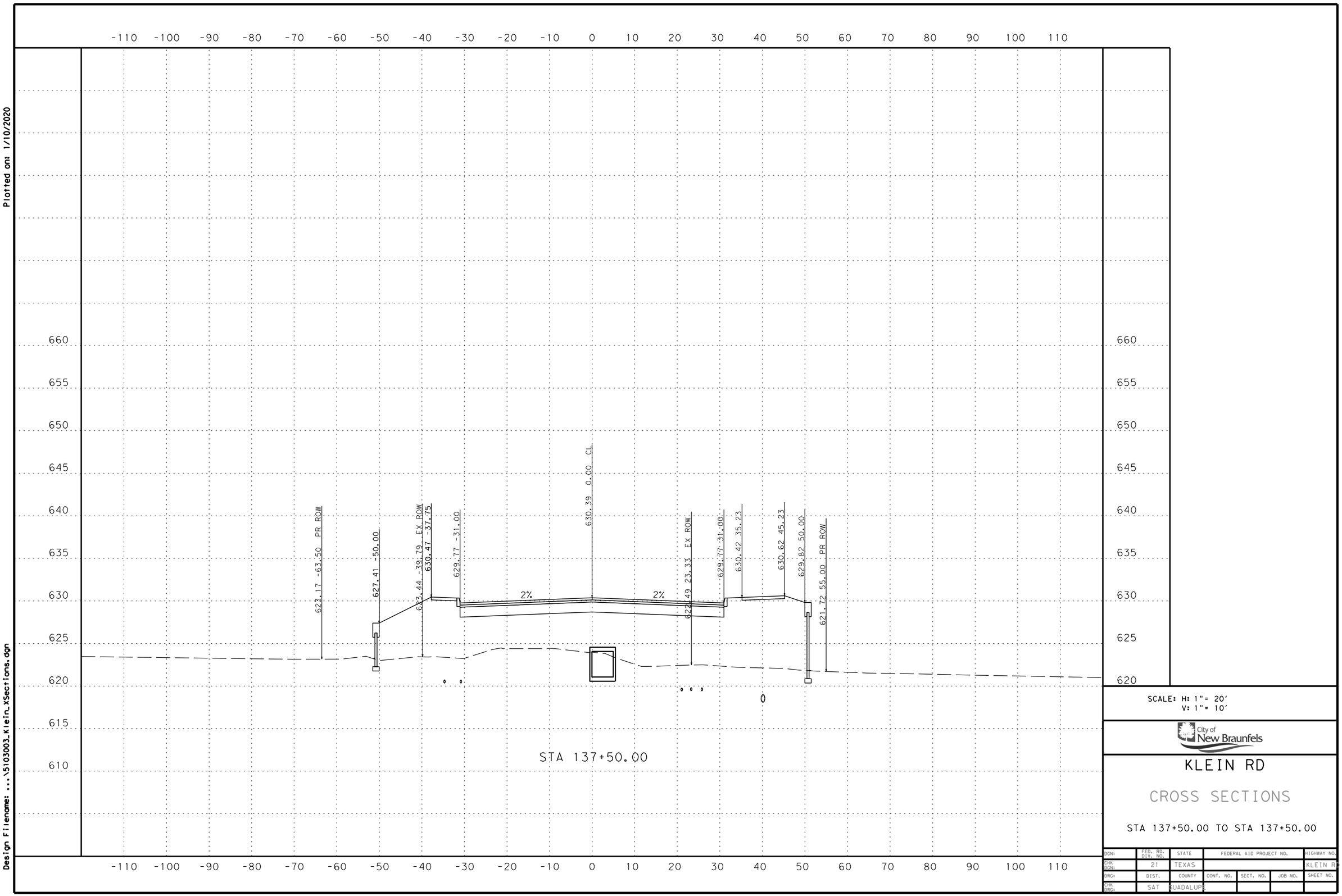

SCALE: H: 1"= 20'
V: 1"= 10'

City of New Braunfels

KLEIN RD

CROSS SECTIONS

STA 137+50.00 TO STA 137+50.00

DGN:	FED. RD. DIV. NO.	STATE	FEDERAL AID PROJECT NO.			HIGHWAY NO.
CHK DGN:	21	TEXAS				KLEIN RD
DWG:	DIST.	COUNTY	CONT. NO.	SECT. NO.	JOB NO.	SHEET NO.
CHK DWG:	SAT	GUADALUPE				

Plotted on: 1/10/2020

Design Filename: ...\5103003_Klein_XSections.dgn

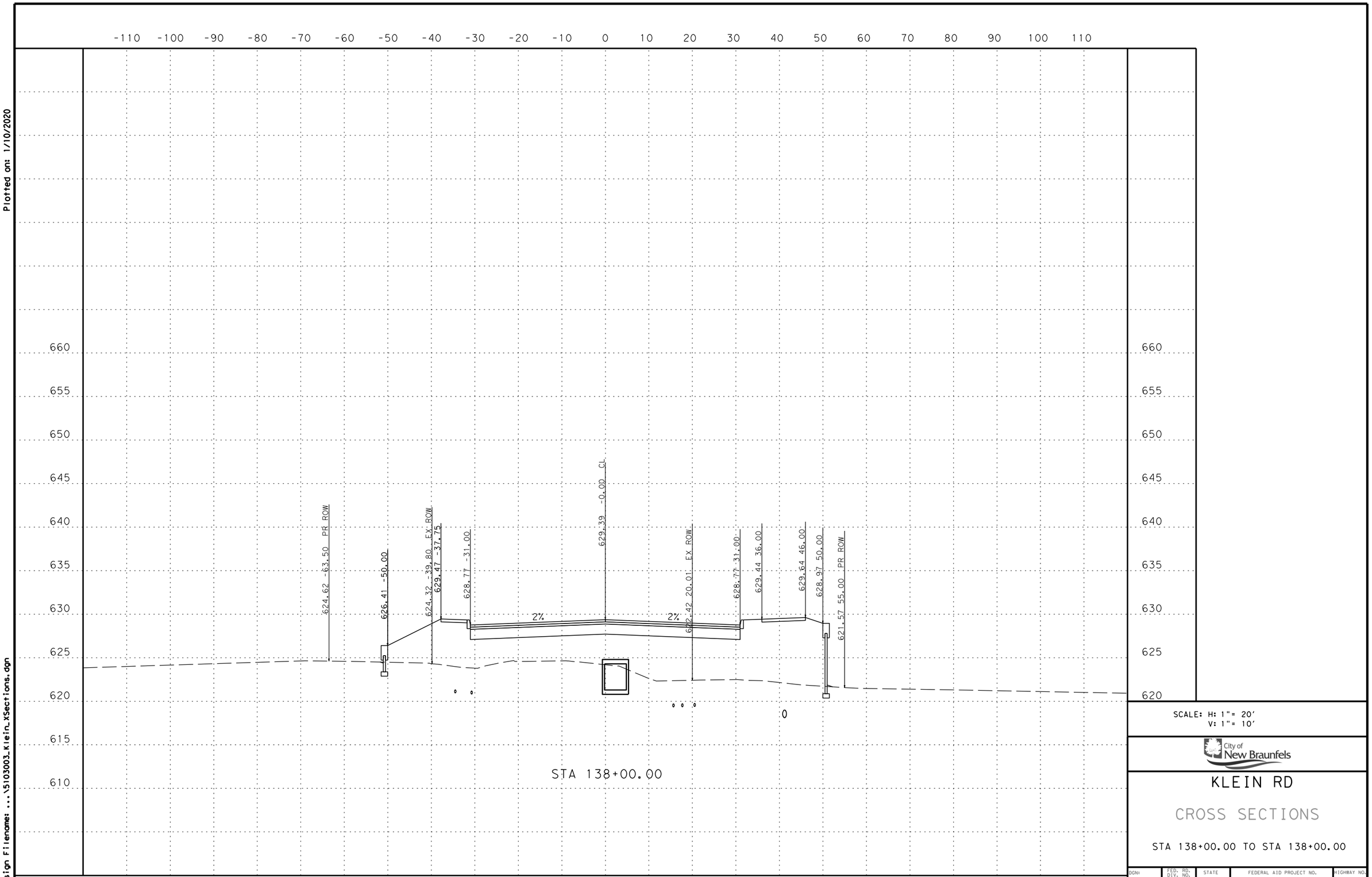

SCALE: H: 1"= 20'
V: 1"= 10'

City of New Braunfels

KLEIN RD

CROSS SECTIONS

STA 138+00.00 TO STA 138+00.00

DGN:	FED. RD. DIV. NO.	STATE	FEDERAL AID PROJECT NO.			HIGHWAY NO.
CHK DGN:	21	TEXAS				KLEIN RD
DWG:	DIST.	COUNTY	CONT. NO.	SECT. NO.	JOB NO.	SHEET NO.
CHK DWG:	SAT	GUADALUPE				

Plotted on: 1/10/2020

Design Filename: ...\5103003_Klein_XSections.dgn

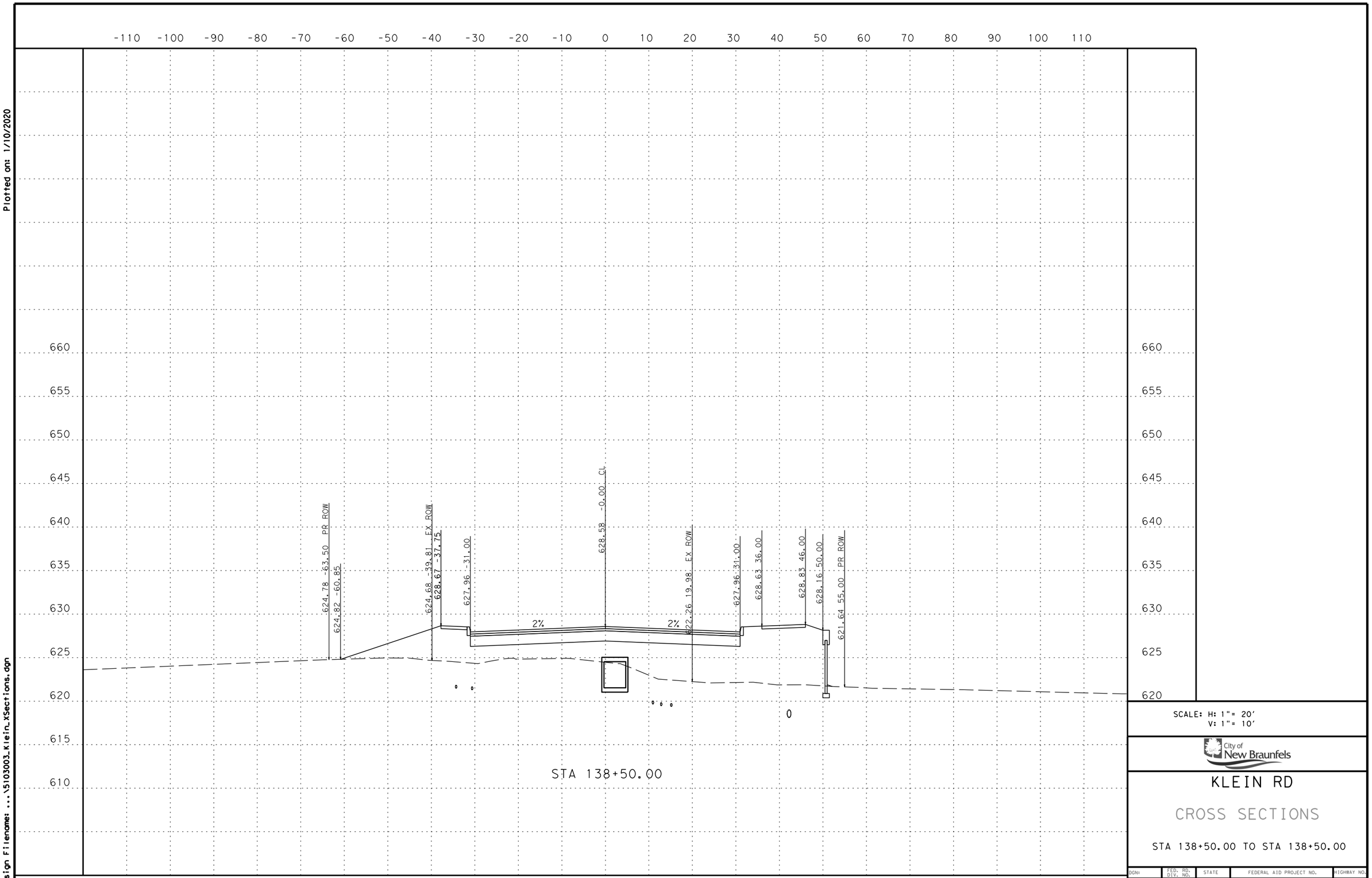

SCALE: H: 1"= 20'
V: 1"= 10'

City of New Braunfels

KLEIN RD

CROSS SECTIONS

STA 138+50.00 TO STA 138+50.00

DGN:	FED. RD. DIV. NO.	STATE	FEDERAL AID PROJECT NO.			HIGHWAY NO.
CHK DGN:	21	TEXAS				KLEIN RD
DWG:	DIST.	COUNTY	CONT. NO.	SECT. NO.	JOB NO.	SHEET NO.
CHK DWG:	SAT	GUADALUPE				

Plotted on: 1/10/2020

Design Filename: ...\5103003_Klein_XSections.dgn

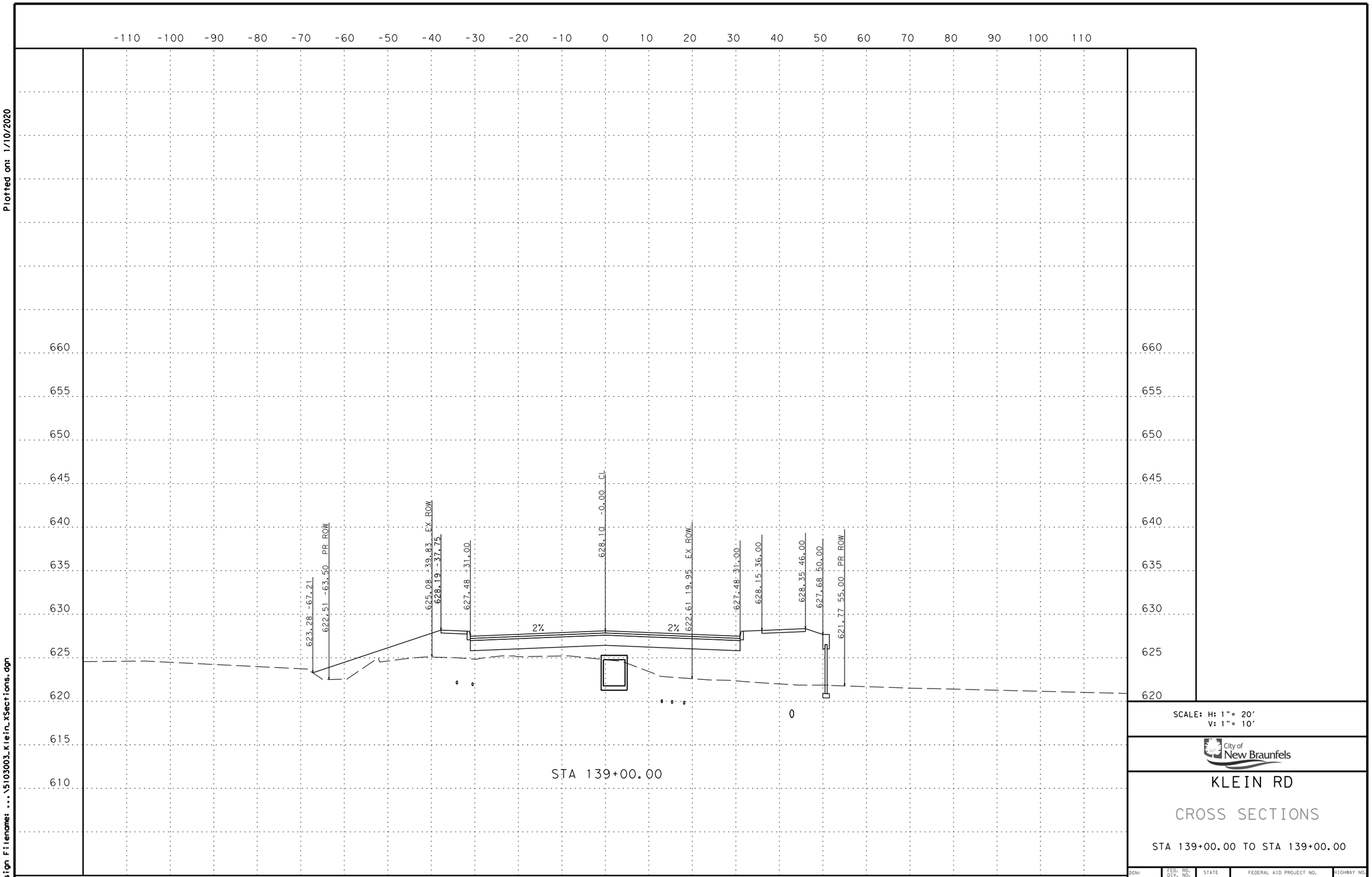

SCALE: H: 1"= 20'
V: 1"= 10'

City of New Braunfels

KLEIN RD

CROSS SECTIONS

STA 139+00.00 TO STA 139+00.00

DGN:	FED. RD. DIV. NO.	STATE	FEDERAL AID PROJECT NO.			HIGHWAY NO.
CHK DGN:	21	TEXAS				KLEIN RD
DWG:	DIST.	COUNTY	CONT. NO.	SECT. NO.	JOB NO.	SHEET NO.
CHK DWG:	SAT	GUADALUPE				

Plotted on: 1/10/2020

Design Filename: ...\5103003_Klein_XSections.dgn

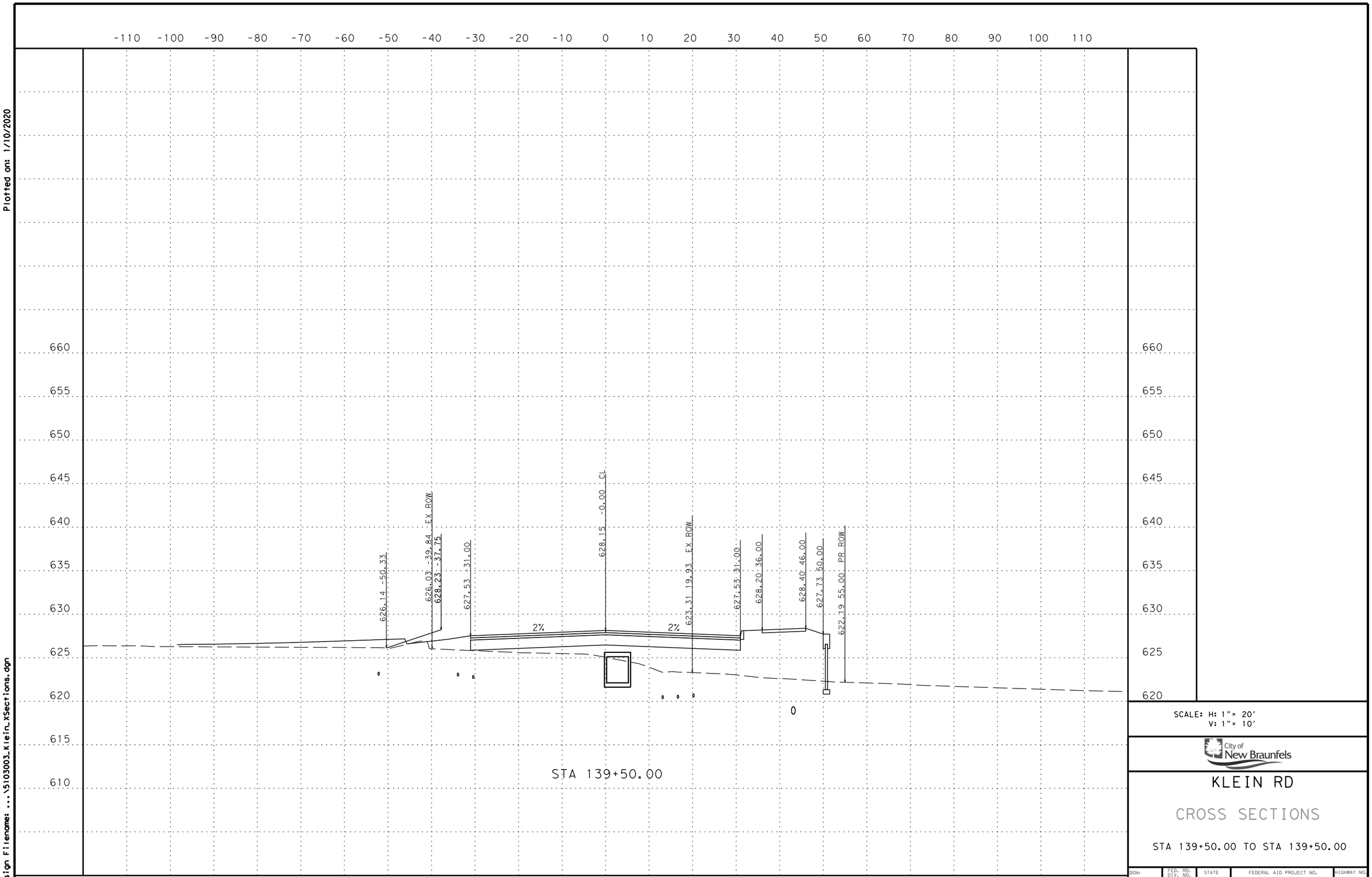

SCALE: H: 1"= 20'
V: 1"= 10'

City of New Braunfels

KLEIN RD

CROSS SECTIONS

STA 139+50.00 TO STA 139+50.00

DGN:	FED. RD. DIV. NO.	STATE	FEDERAL AID PROJECT NO.				HIGHWAY NO.
CHK DGN:	21	TEXAS					KLEIN RD
DWG:	DIST.	COUNTY	CONT. NO.	SECT. NO.	JOB NO.		SHEET NO.
CHK DWG:	SAT	GUADALUPE					

Plotted on: 1/10/2020

Design Filename: ...\5103003_Klein_XSections.dgn

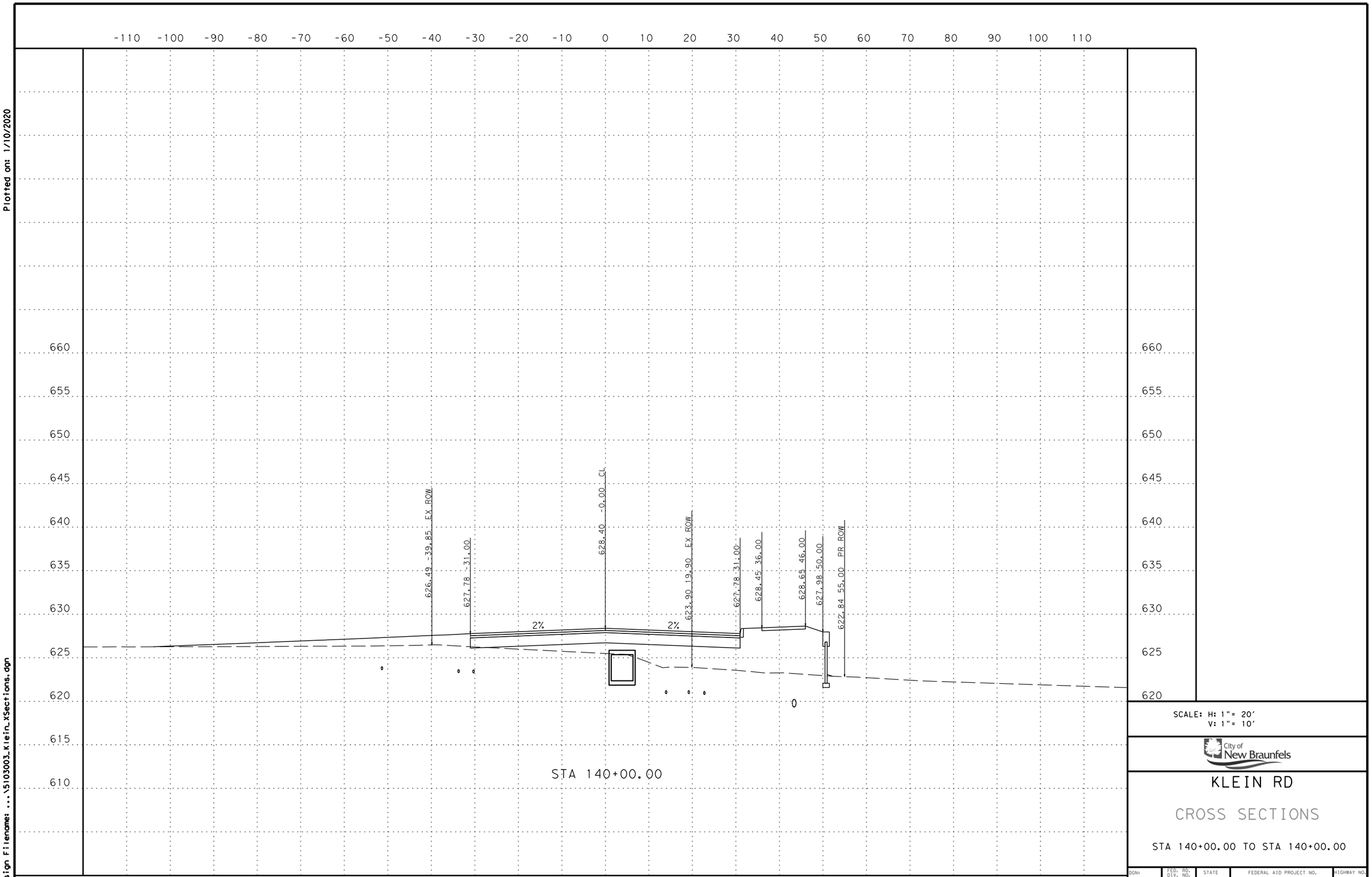

SCALE: H: 1"= 20'
V: 1"= 10'

City of New Braunfels

KLEIN RD

CROSS SECTIONS

STA 140+00.00 TO STA 140+00.00

DGN:	FED. RD. DIV. NO.	STATE	FEDERAL AID PROJECT NO.			HIGHWAY NO.
CHK DGN:	21	TEXAS				KLEIN RD
DWG:	DIST.	COUNTY	CONT. NO.	SECT. NO.	JOB NO.	SHEET NO.
CHK DWG:	SAT	GUADALUPE				

Plotted on: 1/10/2020

Design Filename: ...\5103003_Klein_XSections.dgn

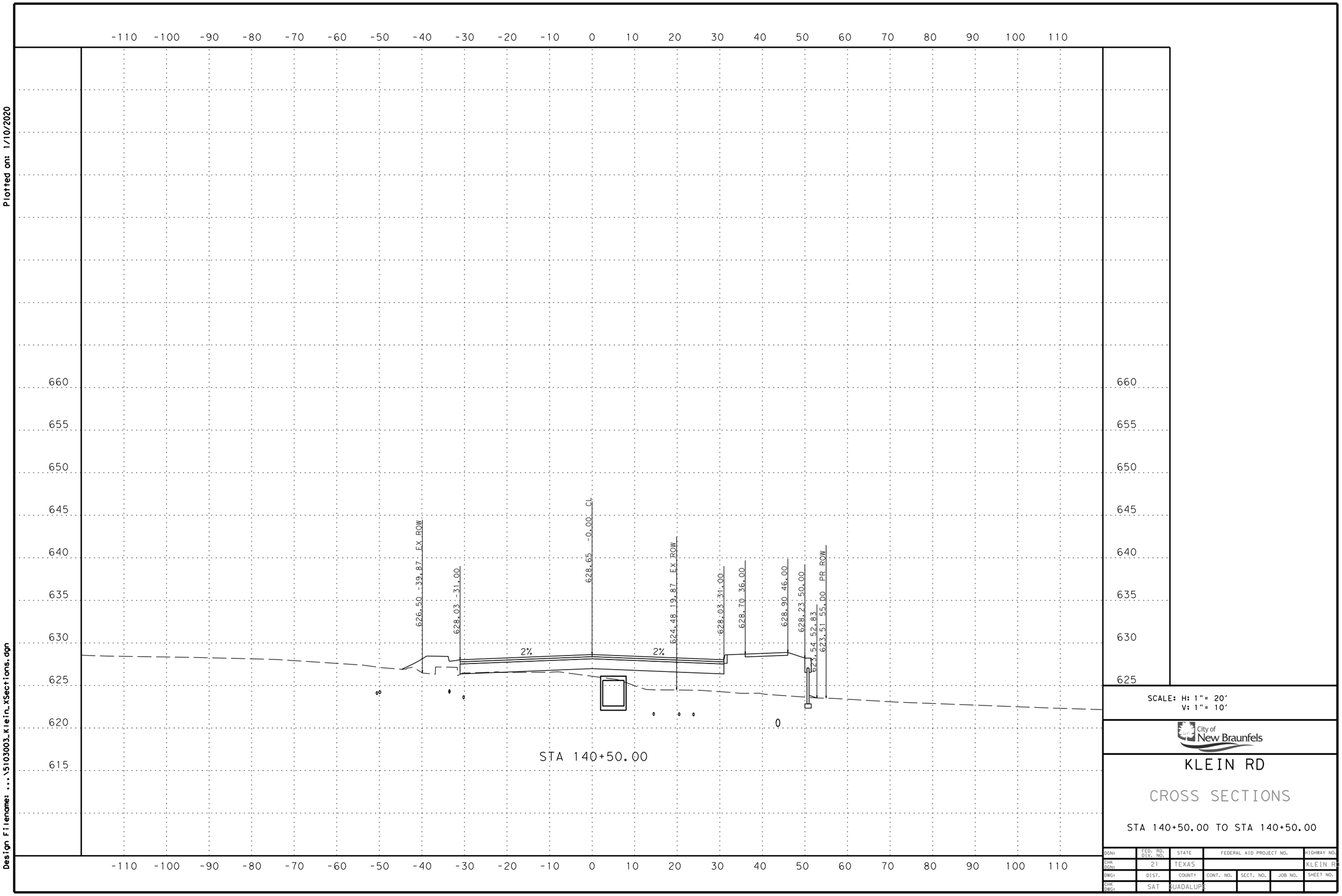

SCALE: H: 1"= 20'
V: 1"= 10'

City of New Braunfels

KLEIN RD

CROSS SECTIONS

STA 140+50.00 TO STA 140+50.00

DGN:	FED. RD. DIV. NO.	STATE	FEDERAL AID PROJECT NO.			HIGHWAY NO.
CHK DGN:	21	TEXAS				KLEIN RD
DWG:	DIST.	COUNTY	CONT. NO.	SECT. NO.	JOB NO.	SHEET NO.
CHK DWG:	SAT	GUADALUPE				

Plotted on: 1/10/2020

Design Filename: ...\5103003_Klein_XSections.dgn

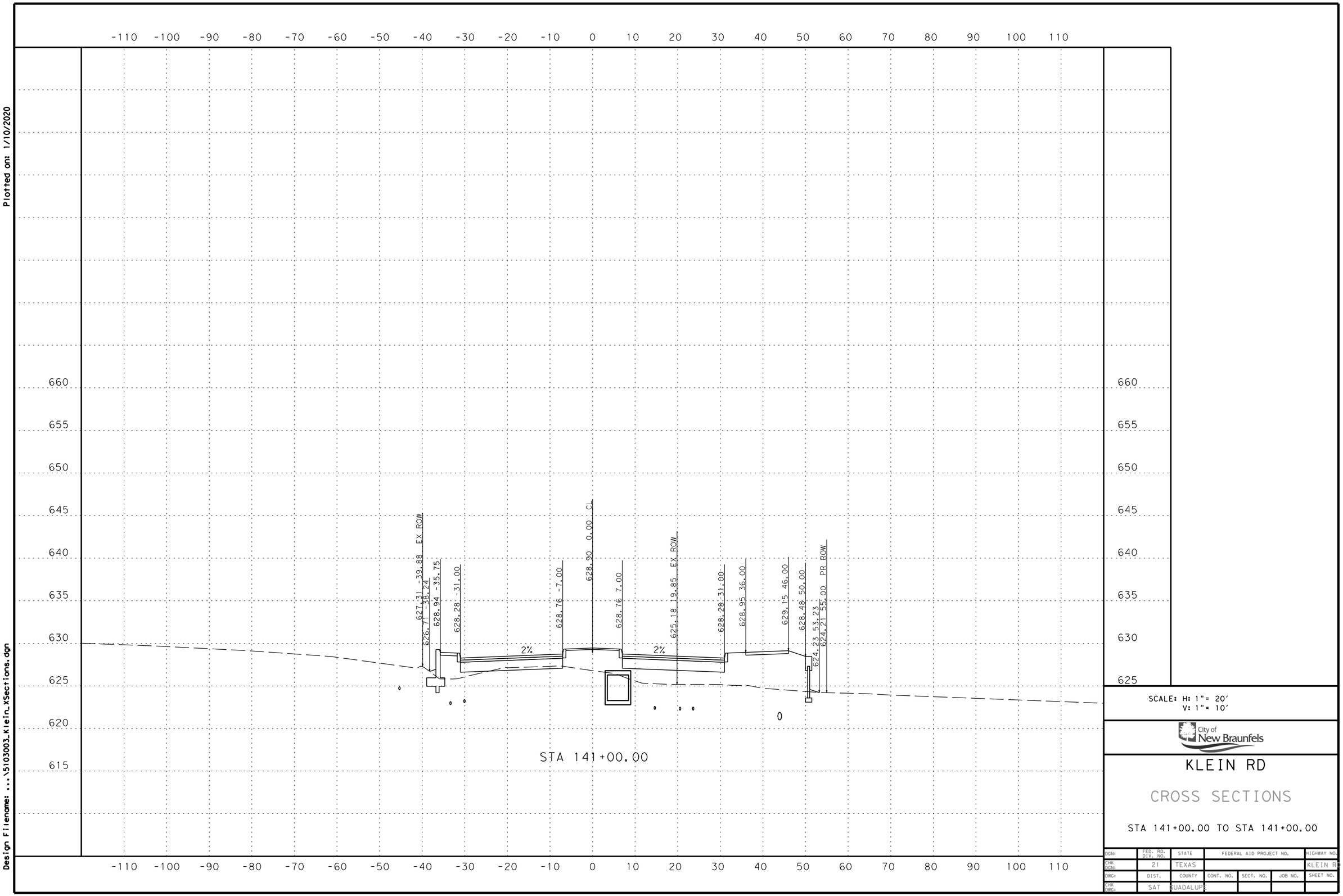

SCALE: H: 1"= 20'
V: 1"= 10'

City of New Braunfels

KLEIN RD

CROSS SECTIONS

STA 141+00.00 TO STA 141+00.00

DGN:	FED. RD. DIV. NO.	STATE	FEDERAL AID PROJECT NO.			HIGHWAY NO.
CHK DGN:	21	TEXAS				KLEIN RD
DWG:	DIST.	COUNTY	CONT. NO.	SECT. NO.	JOB NO.	SHEET NO.
CHK DWG:	SAT	GUADALUPE				

Plotted on: 1/10/2020

Design Filename: ...\5103003_Klein_XSections.dgn

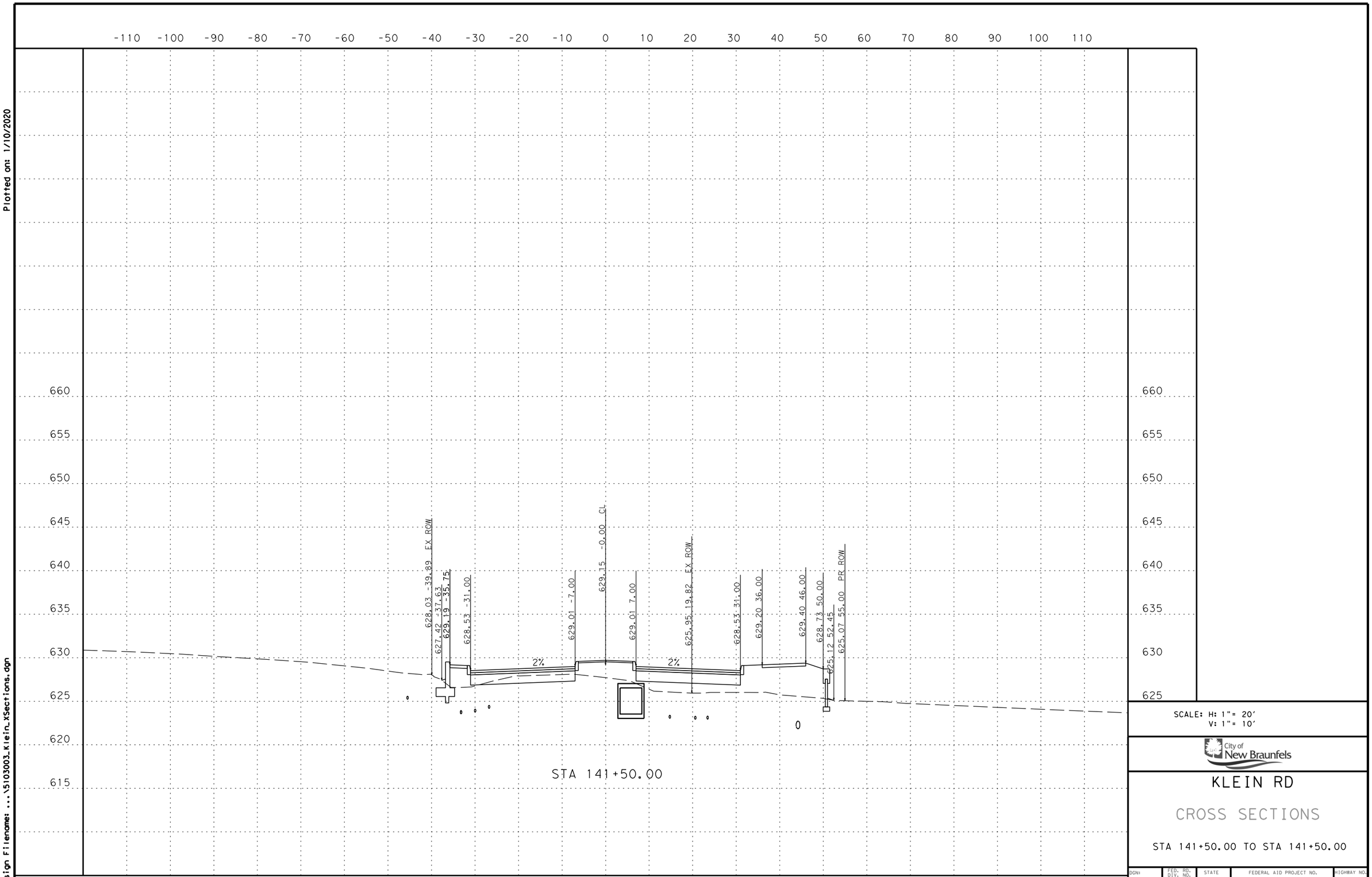

SCALE: H: 1"= 20'
V: 1"= 10'

City of New Braunfels

KLEIN RD

CROSS SECTIONS

STA 141+50.00 TO STA 141+50.00

DGN:	FED. RD. DIV. NO.	STATE	FEDERAL AID PROJECT NO.			HIGHWAY NO.
CHK DGN:	21	TEXAS				KLEIN RD
DWG:	DIST.	COUNTY	CONT. NO.	SECT. NO.	JOB NO.	SHEET NO.
CHK DWG:	SAT	GUADALUPE				

Plotted on: 1/10/2020

Design Filename: ...\5103003_Klein_XSections.dgn

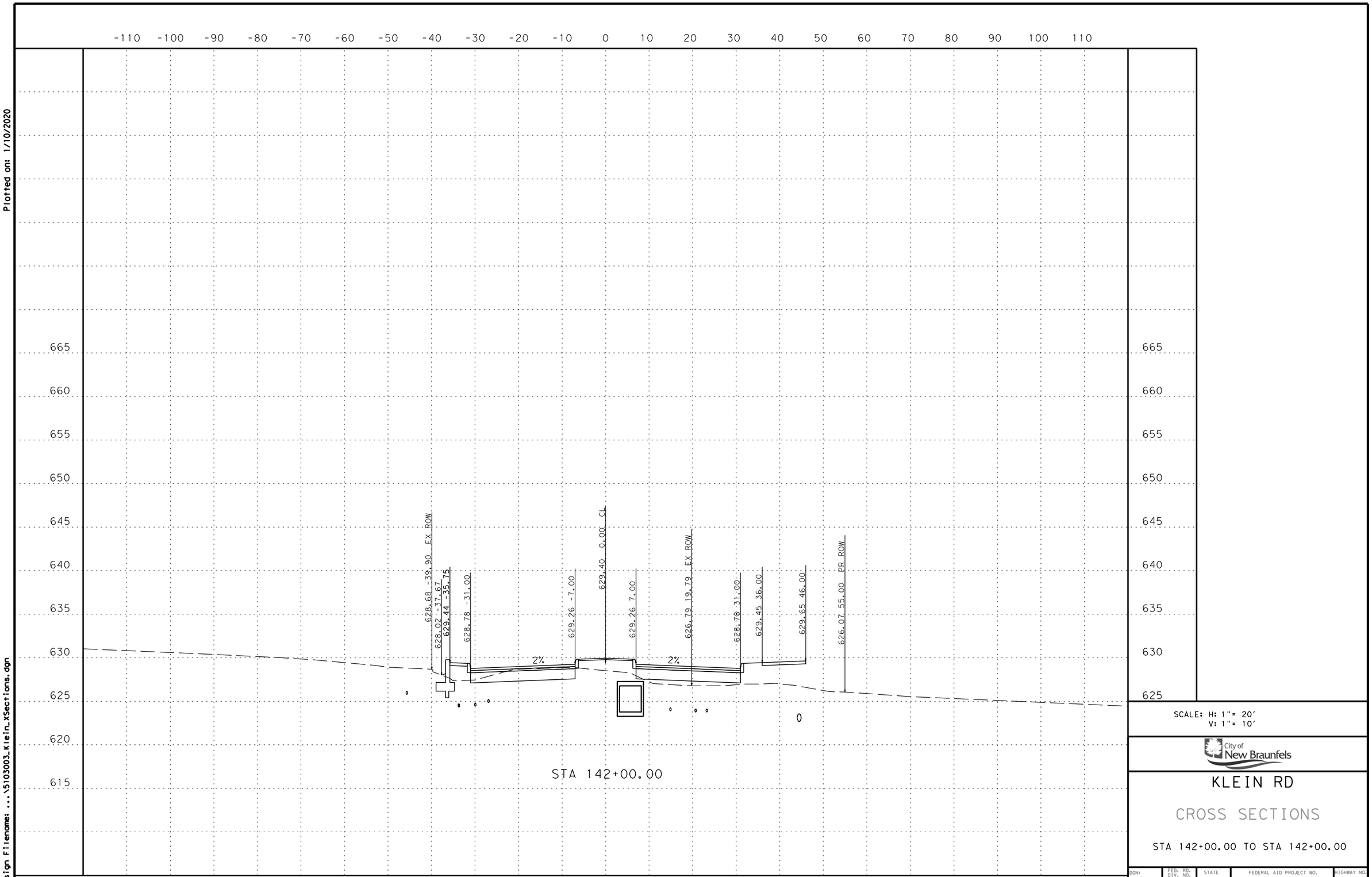

SCALE: H: 1"= 20'
V: 1"= 10'

City of New Braunfels

KLEIN RD

CROSS SECTIONS

STA 142+00.00 TO STA 142+00.00

DGN:	FED. RD. DIV. NO.	STATE	FEDERAL AID PROJECT NO.			HIGHWAY NO.
CHK DGN:	21	TEXAS				KLEIN RD
DWG:	DIST.	COUNTY	CONT. NO.	SECT. NO.	JOB NO.	SHEET NO.
CHK DWG:	SAT	GUADALUPE				

Plotted on: 1/10/2020

Design Filename: ...\5103003_Klein_XSections.dgn

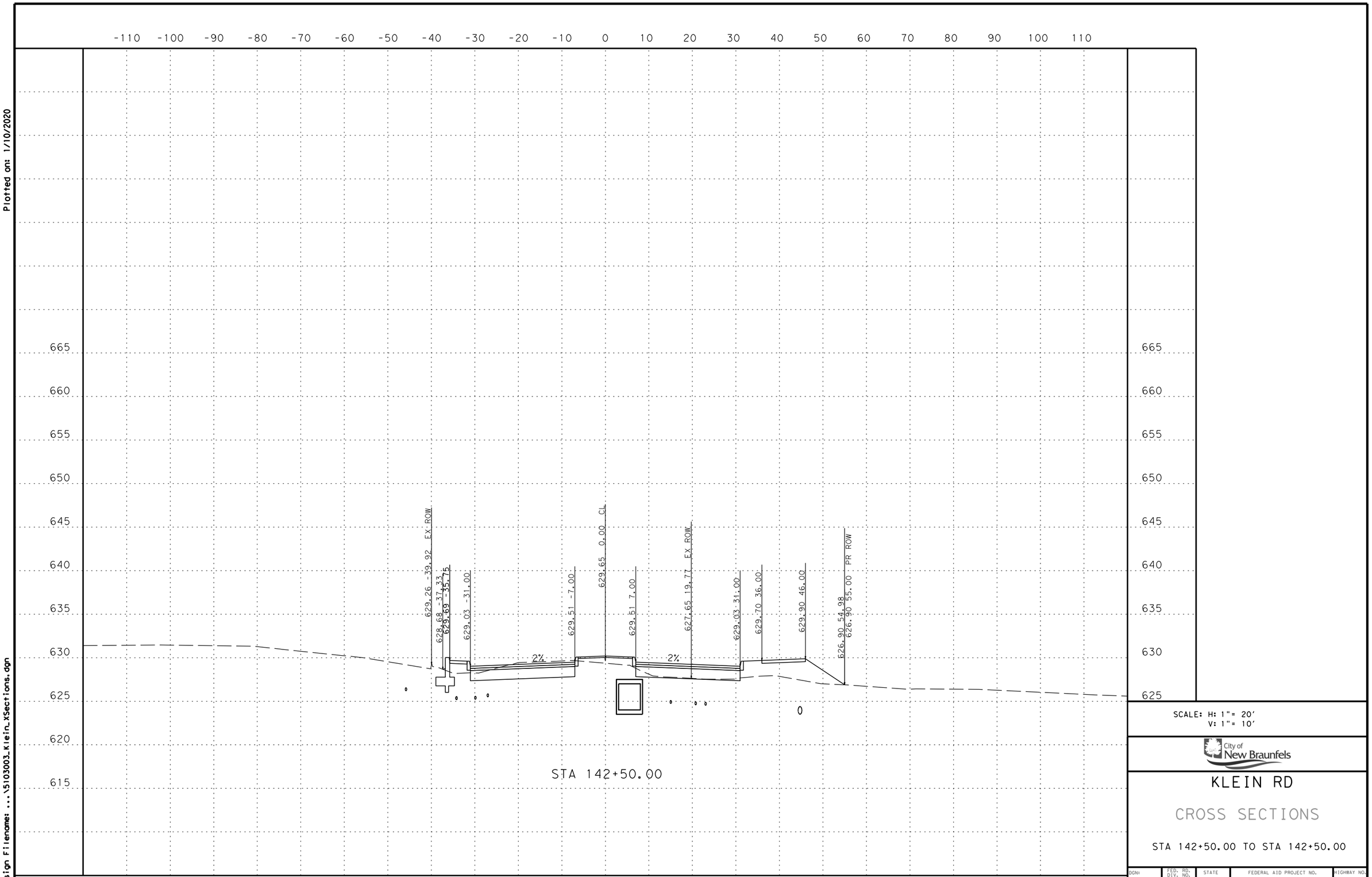

SCALE: H: 1" = 20'
V: 1" = 10'

City of New Braunfels

KLEIN RD

CROSS SECTIONS

STA 142+50.00 TO STA 142+50.00

DGN:	FED. RD. DIV. NO.	STATE	FEDERAL AID PROJECT NO.			HIGHWAY NO.
CHK DGN:	21	TEXAS				KLEIN RD
DWG:	DIST.	COUNTY	CONT. NO.	SECT. NO.	JOB NO.	SHEET NO.
CHK DWG:	SAT	GUADALUPE				

Plotted on: 1/10/2020

Design Filename: ...\5103003_Klein_XSections.dgn

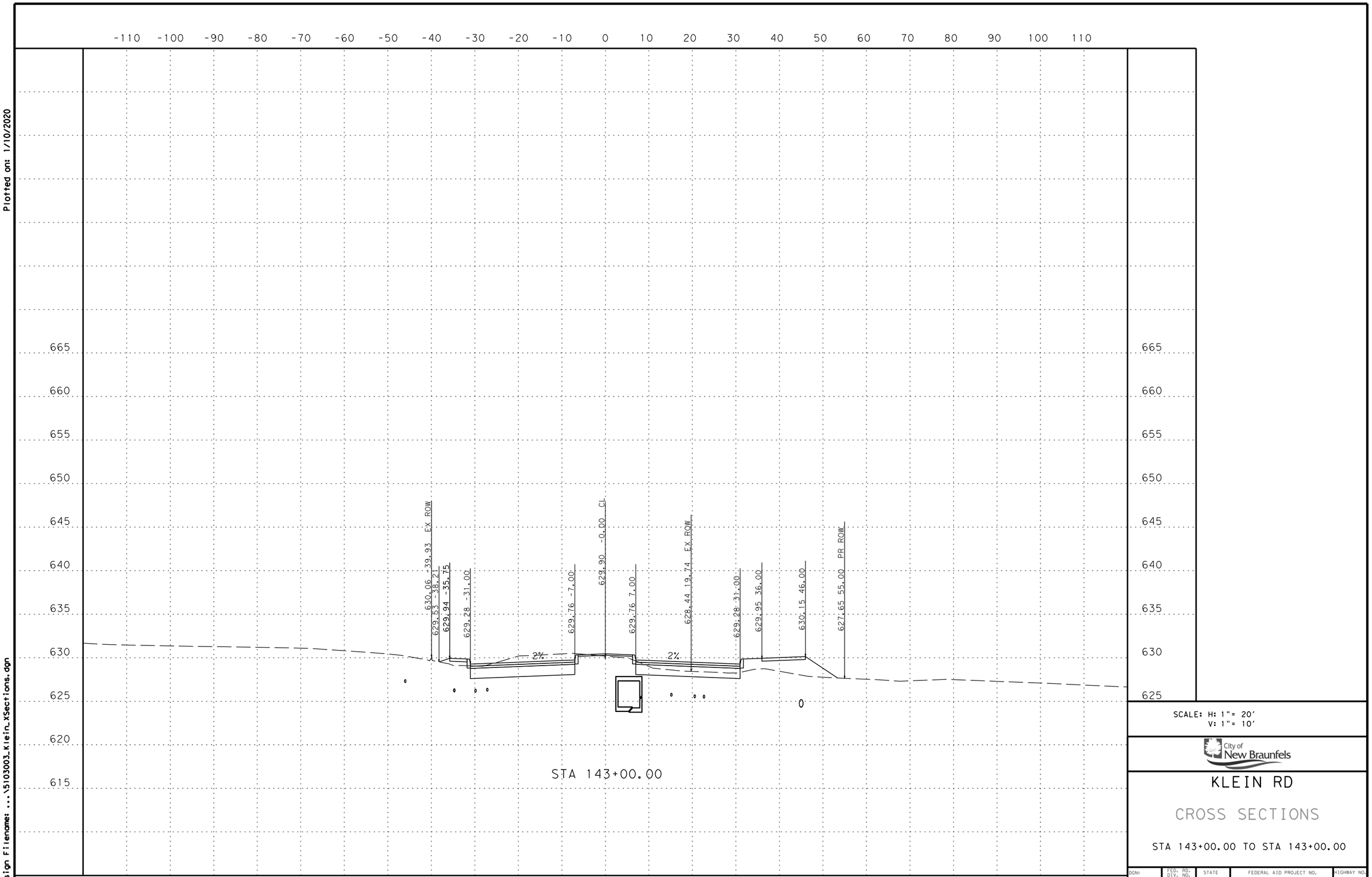

SCALE: H: 1"= 20'
V: 1"= 10'

City of New Braunfels

KLEIN RD

CROSS SECTIONS

STA 143+00.00 TO STA 143+00.00

DGN:	FED. RD. DIV. NO.	STATE	FEDERAL AID PROJECT NO.			HIGHWAY NO.
CHK DGN:	21	TEXAS				KLEIN RD
DWG:	DIST.	COUNTY	CONT. NO.	SECT. NO.	JOB NO.	SHEET NO.
CHK DWG:	SAT	GUADALUPE				

Plotted on: 1/10/2020

Design Filename: ...\5103003_Klein_XSections.dgn

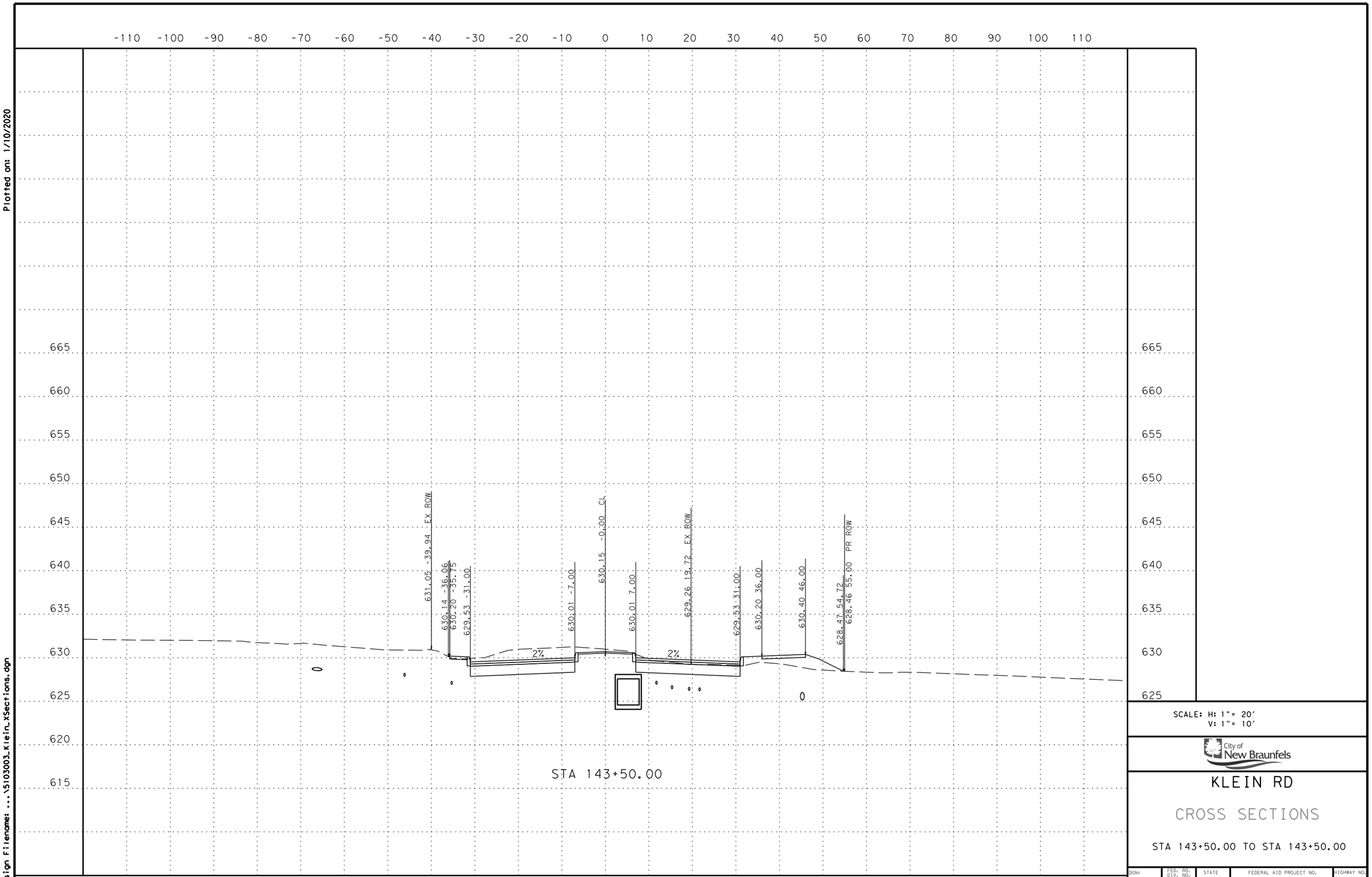

SCALE: H: 1"= 20'
V: 1"= 10'

City of New Braunfels

KLEIN RD

CROSS SECTIONS

STA 143+50.00 TO STA 143+50.00

DGN:	FED. RD. DIV. NO.	STATE	FEDERAL AID PROJECT NO.			HIGHWAY NO.
CHK DGN:	21	TEXAS				KLEIN RD
DWG:	DIST.	COUNTY	CONT. NO.	SECT. NO.	JOB NO.	SHEET NO.
CHK DWG:	SAT	GUADALUPE				

Plotted on: 1/10/2020

Design Filename: ...\5103003_Klein_XSections.dgn

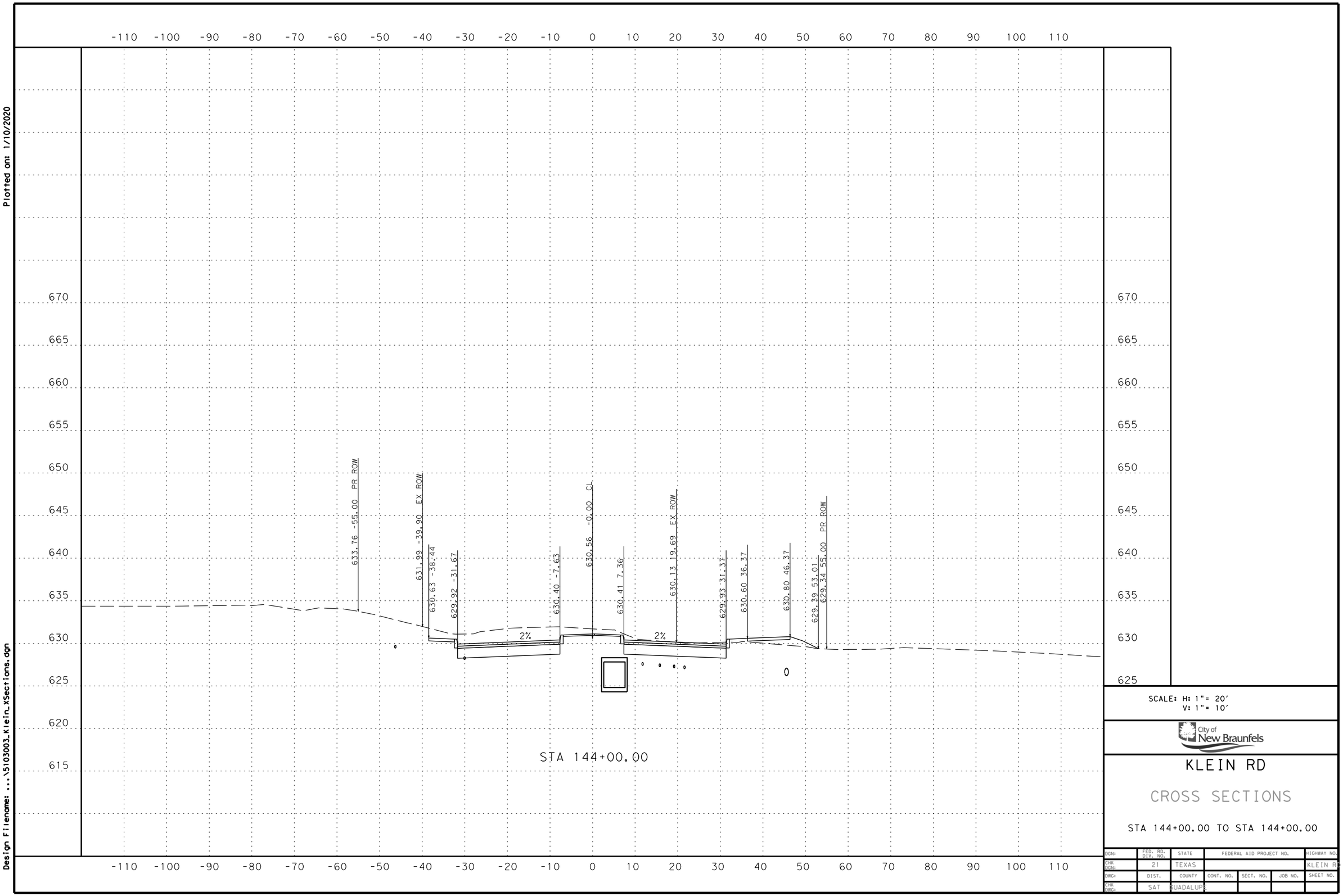

SCALE: H: 1"= 20'
V: 1"= 10'

City of New Braunfels

KLEIN RD

CROSS SECTIONS

STA 144+00.00 TO STA 144+00.00

DGN:	FED. RD. DIV. NO.	STATE	FEDERAL AID PROJECT NO.			HIGHWAY NO.
CHK DGN:	21	TEXAS				KLEIN RD
DWG:	DIST.	COUNTY	CONT. NO.	SECT. NO.	JOB NO.	SHEET NO.
CHK DWG:	SAT	GUADALUPE				

Plotted on: 1/10/2020

Design Filename: ...\5103003_Klein_XSections.dgn

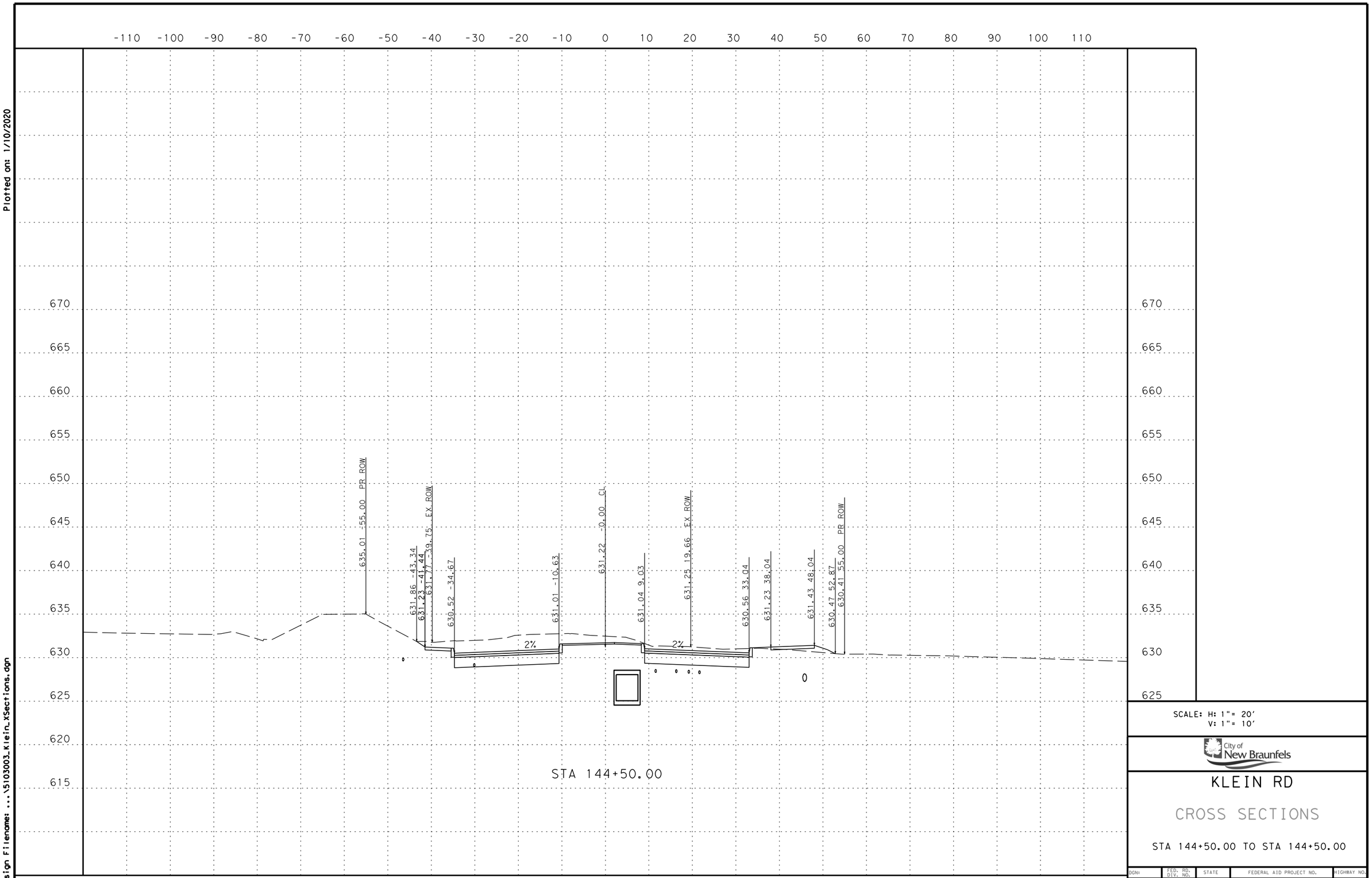

SCALE: H: 1"= 20'
V: 1"= 10'

City of New Braunfels

KLEIN RD

CROSS SECTIONS

STA 144+50.00 TO STA 144+50.00

DGN:	FED. RD. DIV. NO.	STATE	FEDERAL AID PROJECT NO.			HIGHWAY NO.
CHK DGN:	21	TEXAS				KLEIN RD
DWG:	DIST.	COUNTY	CONT. NO.	SECT. NO.	JOB NO.	SHEET NO.
CHK DWG:	SAT	GUADALUPE				

Plotted on: 1/10/2020

Design Filename: ...\5103003_Klein_XSections.dgn

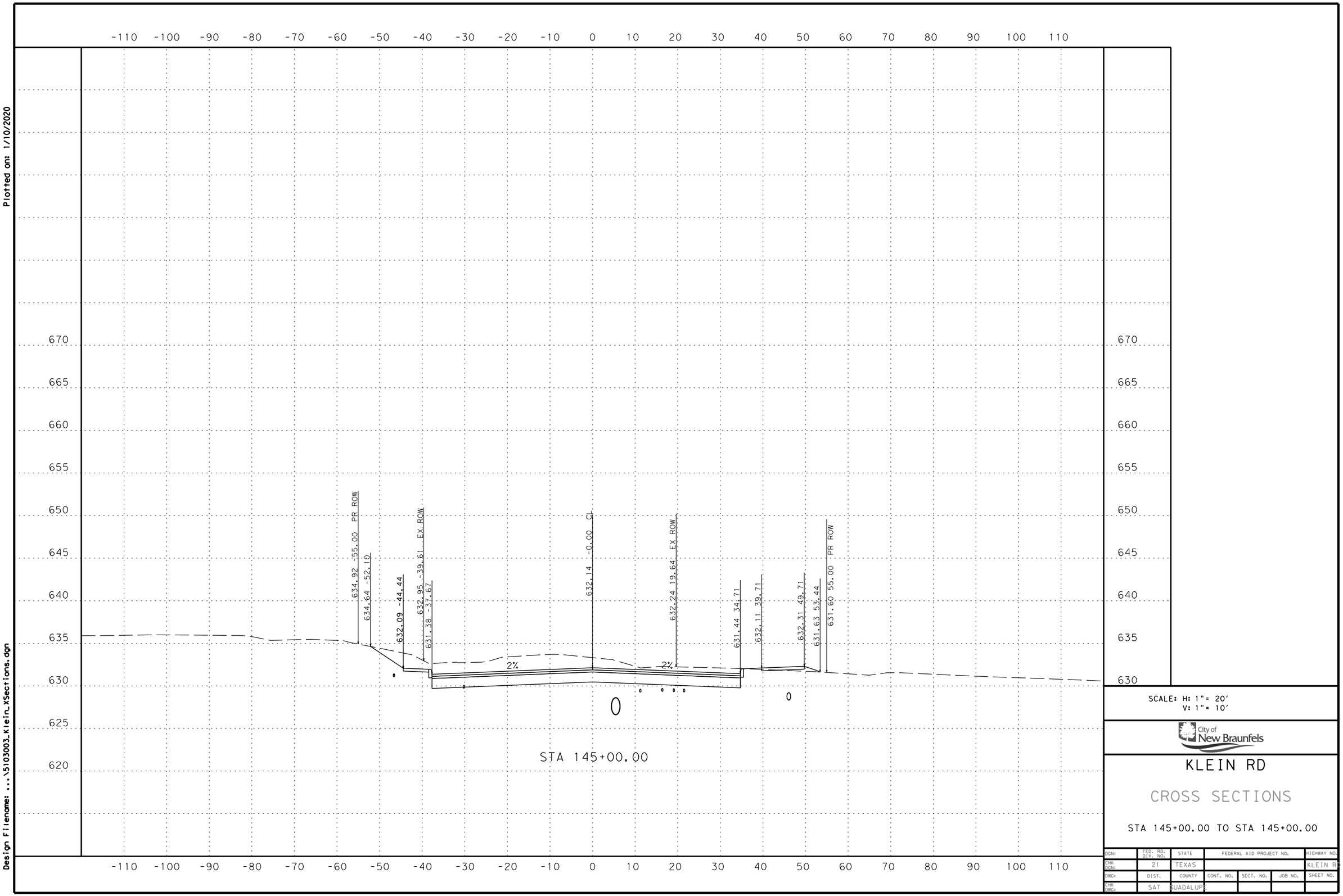

SCALE: H: 1"= 20'
V: 1"= 10'

City of New Braunfels

KLEIN RD

CROSS SECTIONS

STA 145+00.00 TO STA 145+00.00

DGN:	FED. RD. DIV. NO.	STATE	FEDERAL AID PROJECT NO.			HIGHWAY NO.
CHK DGN:	21	TEXAS				KLEIN RD
DWG:	DIST.	COUNTY	CONT. NO.	SECT. NO.	JOB NO.	SHEET NO.
CHK DWG:	SAT	GUADALUPE				

Plotted on: 1/10/2020

Design Filename: ...\5103003_Klein_XSections.dgn

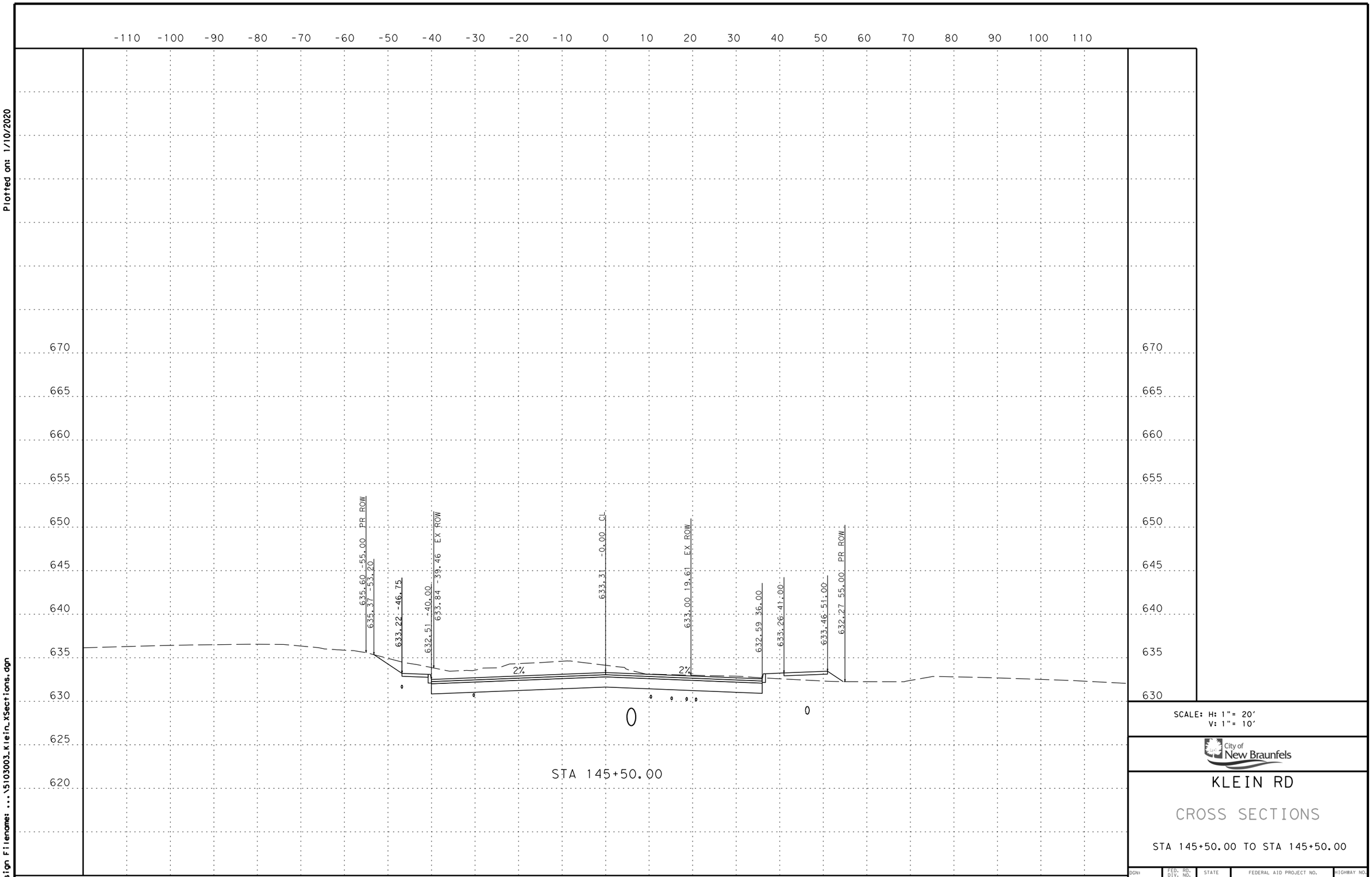

SCALE: H: 1"= 20'
V: 1"= 10'

City of New Braunfels

KLEIN RD

CROSS SECTIONS

STA 145+50.00 TO STA 145+50.00

DGN:	FED. RD. DIV. NO.	STATE	FEDERAL AID PROJECT NO.			HIGHWAY NO.
CHK DGN:	21	TEXAS				KLEIN RD
DWG:	DIST.	COUNTY	CONT. NO.	SECT. NO.	JOB NO.	SHEET NO.
CHK DWG:	SAT	GUADALUPE				

Plotted on: 1/10/2020

Design Filename: ...\5103003_Klein_XSections.dgn

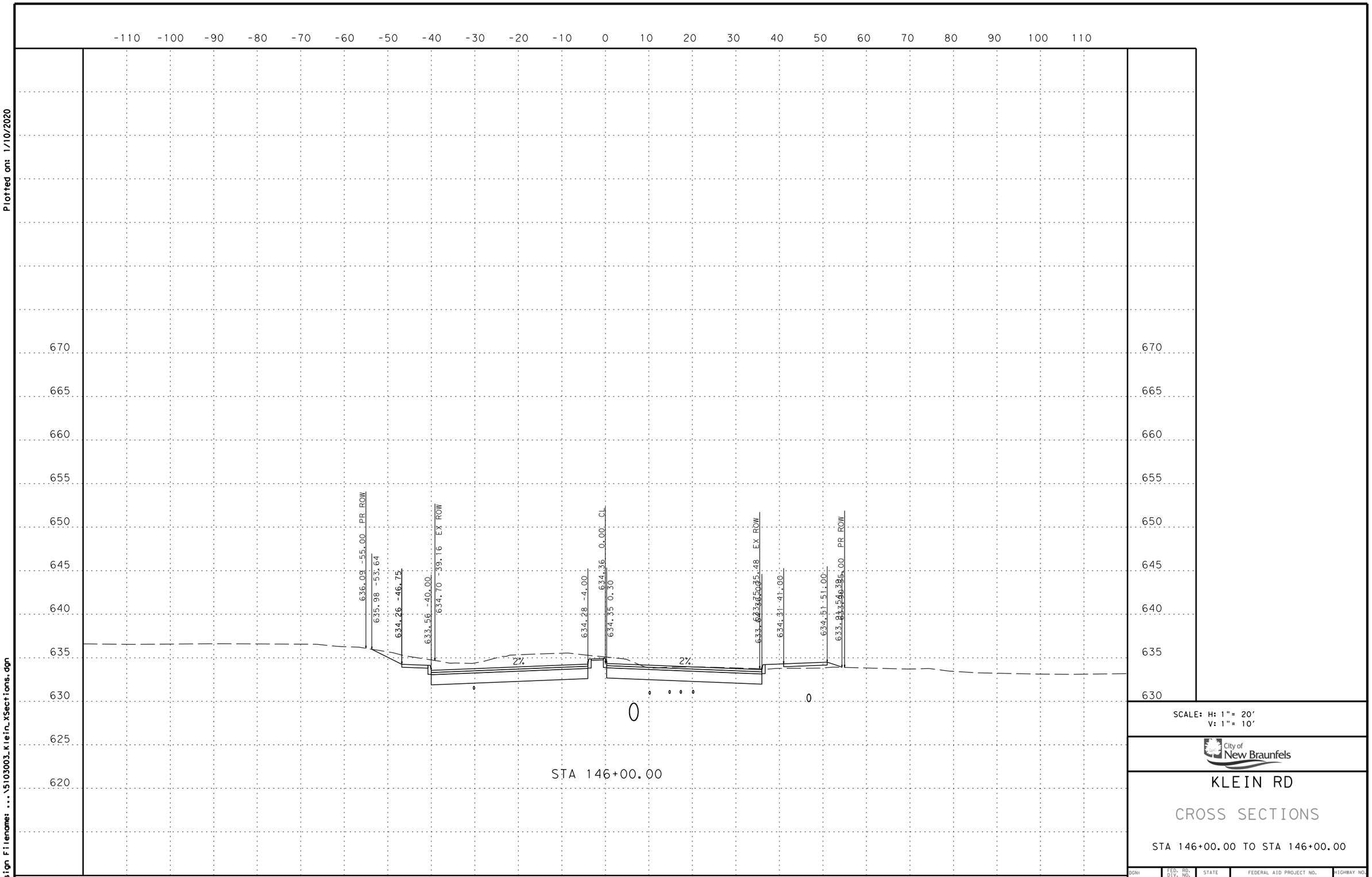

SCALE: H: 1"= 20'
V: 1"= 10'

City of New Braunfels

KLEIN RD

CROSS SECTIONS

STA 146+00.00 TO STA 146+00.00

DGN:	FED. RD. DIV. NO.	STATE	FEDERAL AID PROJECT NO.			HIGHWAY NO.
CHK DGN:	21	TEXAS				KLEIN RD
DWG:	DIST.	COUNTY	CONT. NO.	SECT. NO.	JOB NO.	SHEET NO.
CHK DWG:	SAT	GUADALUPE				

Plotted on: 1/10/2020

Design Filename: ...\5103003_Klein_XSections.dgn

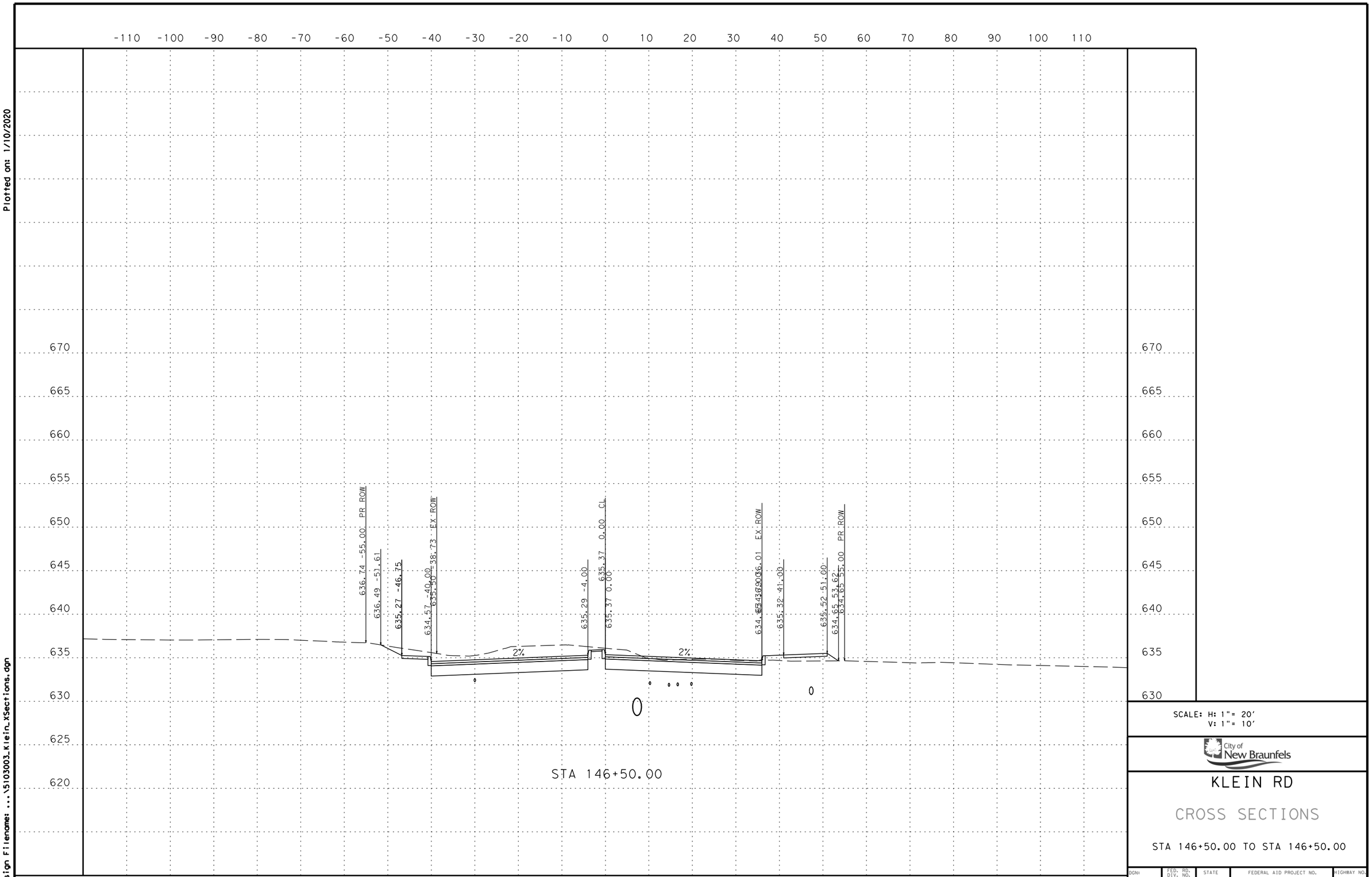

SCALE: H: 1" = 20'
V: 1" = 10'

City of New Braunfels

KLEIN RD

CROSS SECTIONS

STA 146+50.00 TO STA 146+50.00

DGN:	FED. RD. DIV. NO.	STATE	FEDERAL AID PROJECT NO.			HIGHWAY NO.
CHK DGN:	21	TEXAS				KLEIN RD
DWG:	DIST.	COUNTY	CONT. NO.	SECT. NO.	JOB NO.	SHEET NO.
CHK DWG:	SAT	GUADALUPE				

Plotted on: 1/10/2020

Design Filename: ...\5103003_Klein_XSections.dgn

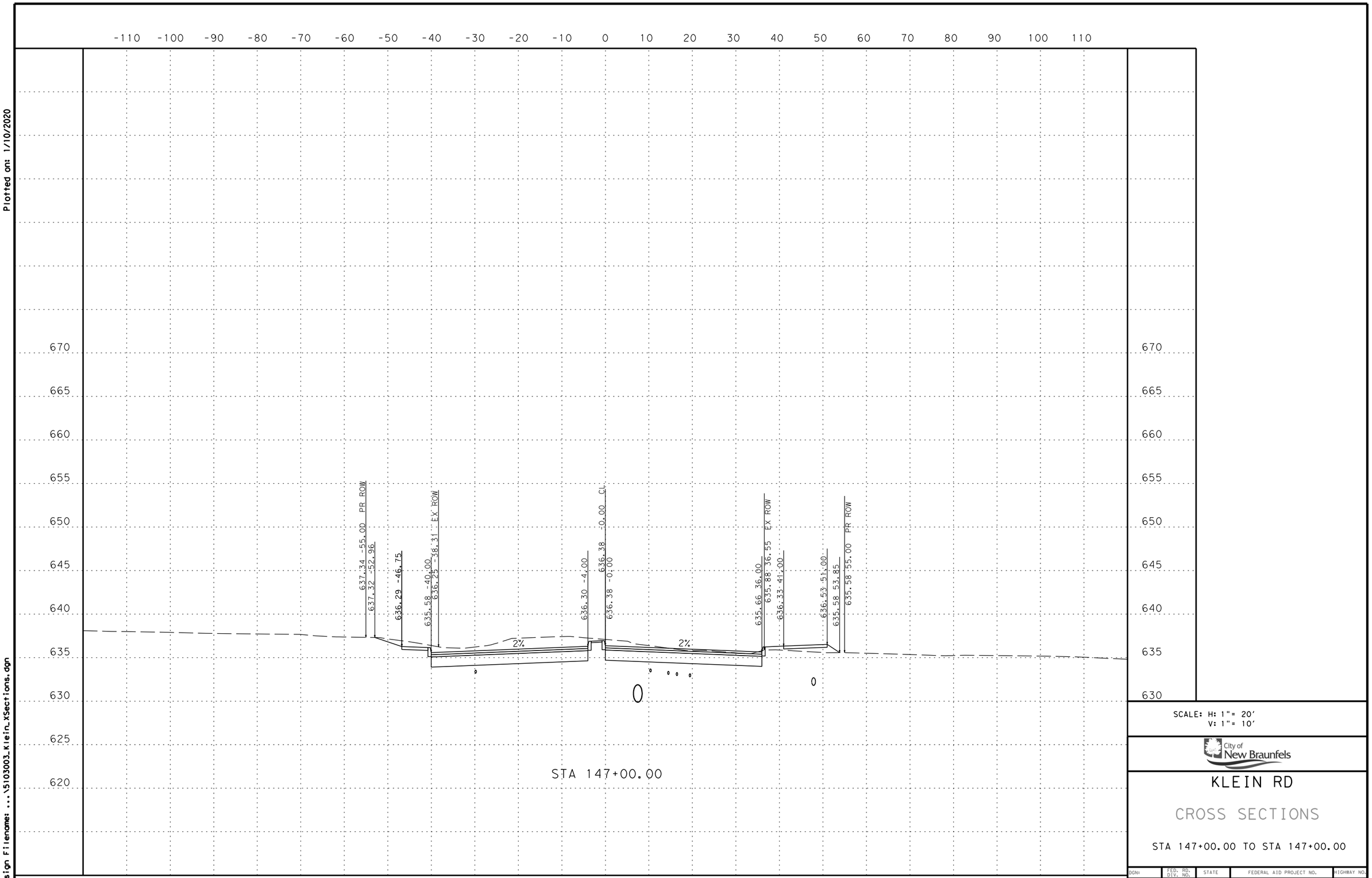

SCALE: H: 1"= 20'
V: 1"= 10'

City of New Braunfels

KLEIN RD

CROSS SECTIONS

STA 147+00.00 TO STA 147+00.00

DGN:	FED. RD. DIV. NO.	STATE	FEDERAL AID PROJECT NO.			HIGHWAY NO.
CHK DGN:	21	TEXAS				KLEIN RD
DWG:	DIST.	COUNTY	CONT. NO.	SECT. NO.	JOB NO.	SHEET NO.
CHK DWG:	SAT	GUADALUPE				

Plotted on: 1/10/2020

Design Filename: ...\5103003_Klein_XSections.dgn

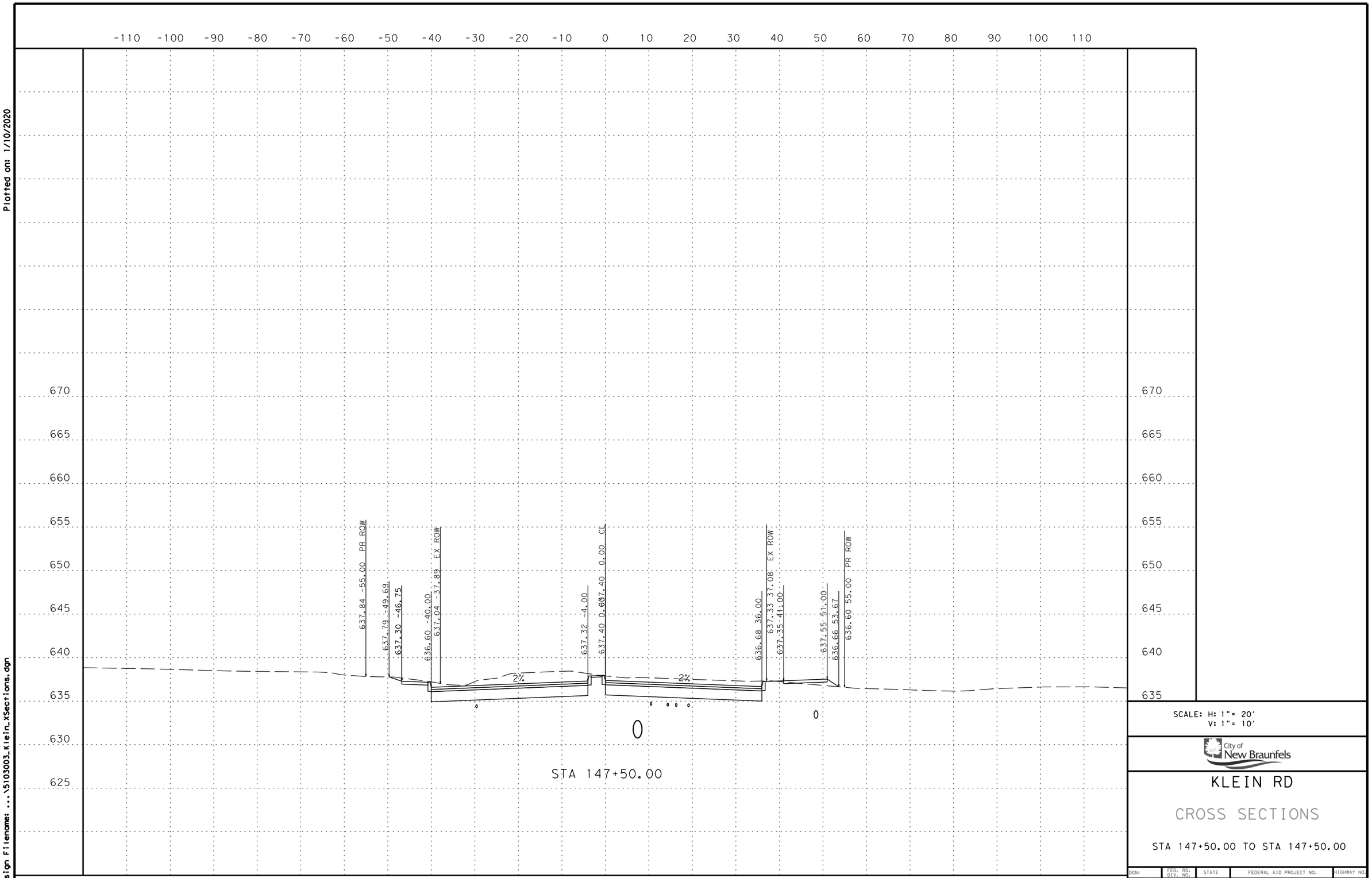

SCALE: H: 1"= 20'
V: 1"= 10'

City of New Braunfels

KLEIN RD

CROSS SECTIONS

STA 147+50.00 TO STA 147+50.00

DGN:	FED. RD. DIV. NO.	STATE	FEDERAL AID PROJECT NO.			HIGHWAY NO.
CHK DGN:	21	TEXAS				KLEIN RD
DWG:	DIST.	COUNTY	CONT. NO.	SECT. NO.	JOB NO.	SHEET NO.
CHK DWG:	SAT	GUADALUPE				

Plotted on: 1/10/2020

Design Filename: ...\5103003_Klein_XSections.dgn

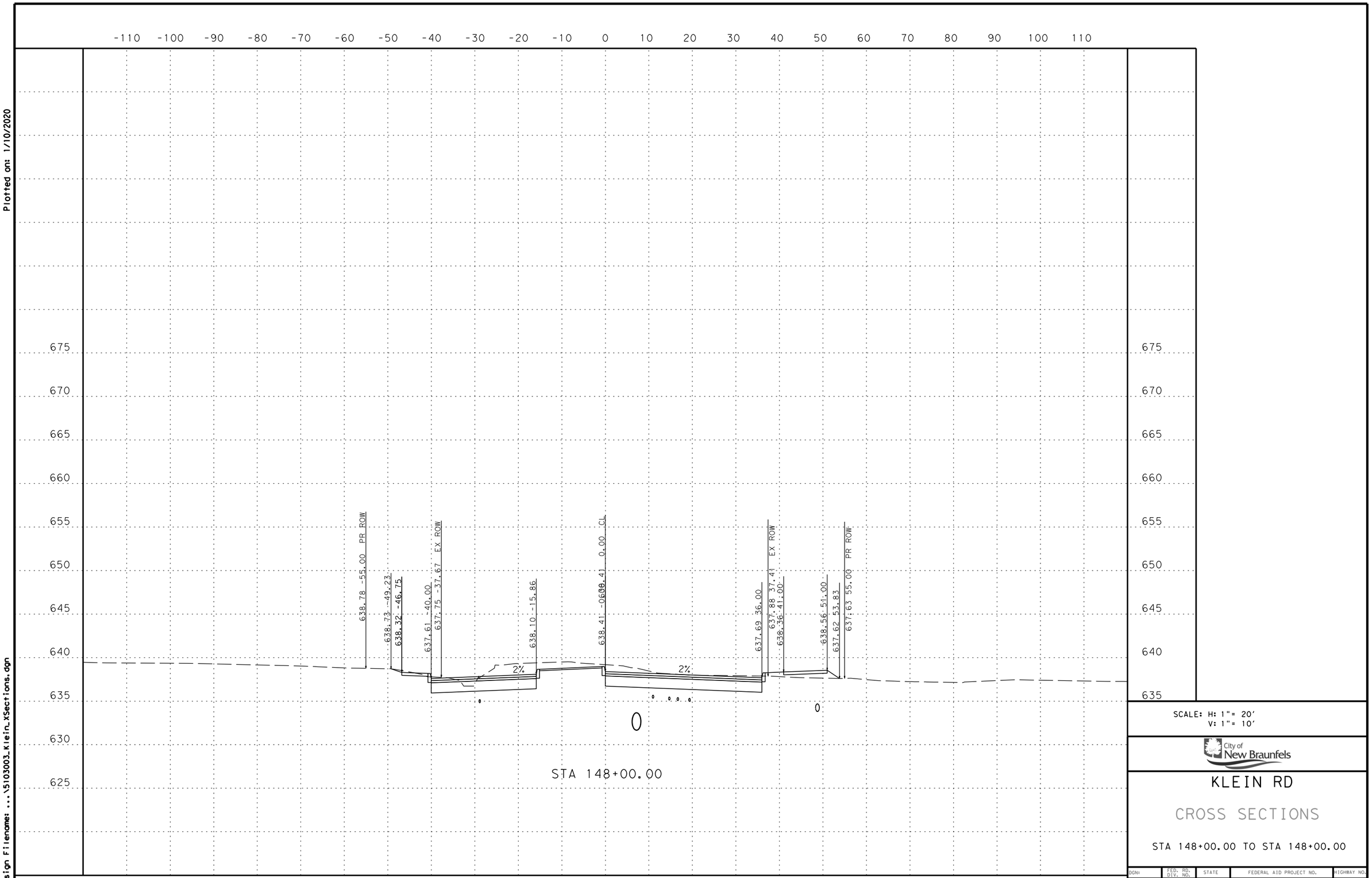

SCALE: H: 1" = 20'
V: 1" = 10'

City of New Braunfels

KLEIN RD

CROSS SECTIONS

STA 148+00.00 TO STA 148+00.00

DGN:	FED. RD. DIV. NO.	STATE	FEDERAL AID PROJECT NO.			HIGHWAY NO.
CHK DGN:	21	TEXAS				KLEIN RD
DWG:	DIST.	COUNTY	CONT. NO.	SECT. NO.	JOB NO.	SHEET NO.
CHK DWG:	SAT	GUADALUPE				

Plotted on: 1/10/2020

Design Filename: ...\5103003_Klein_XSections.dgn

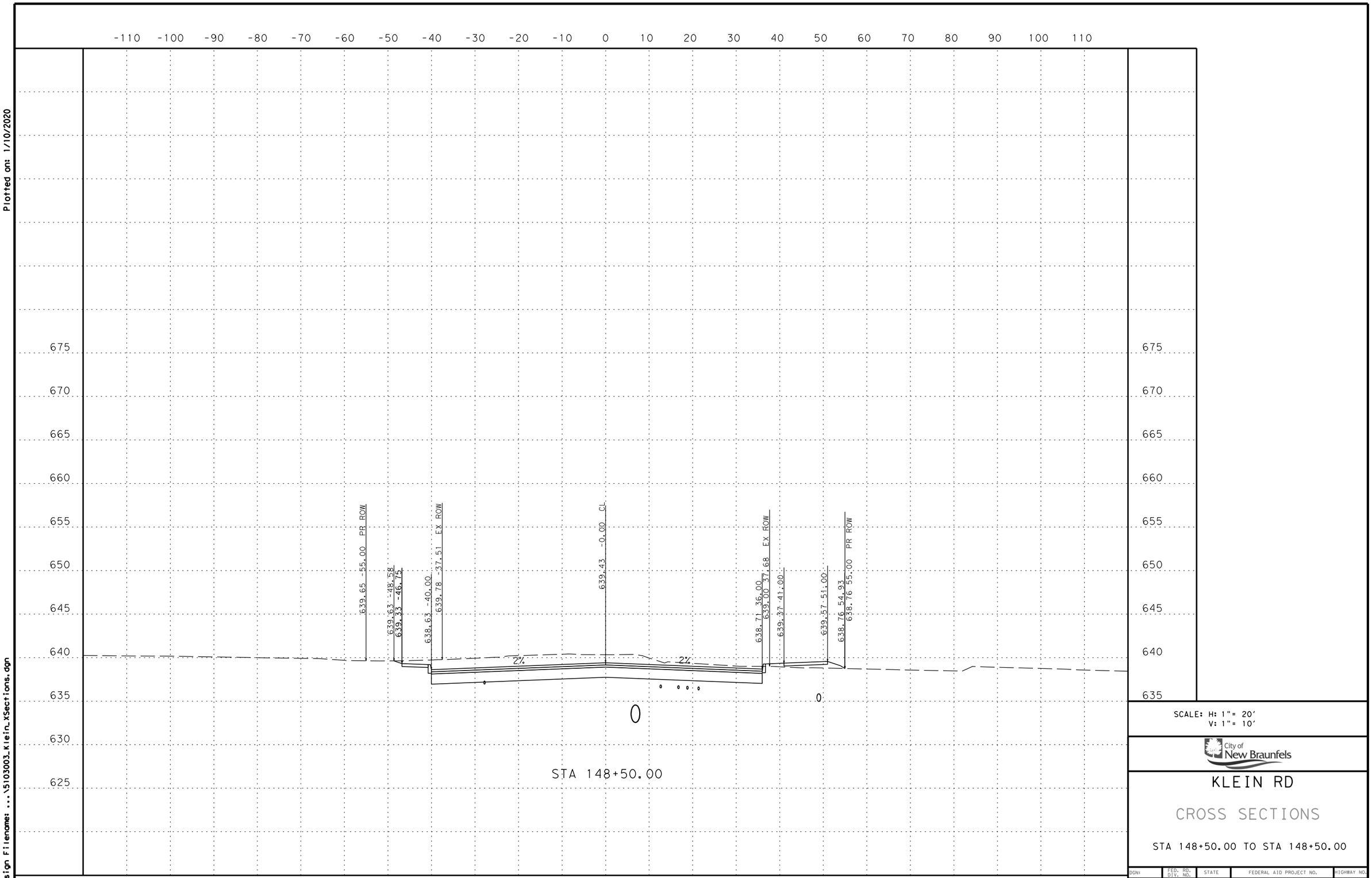

SCALE: H: 1" = 20'
V: 1" = 10'

City of New Braunfels

KLEIN RD

CROSS SECTIONS

STA 148+50.00 TO STA 148+50.00

DGN:	FED. RD. DIV. NO.	STATE	FEDERAL AID PROJECT NO.			HIGHWAY NO.
CHK DGN:	21	TEXAS				KLEIN RD
DWG:	DIST.	COUNTY	CONT. NO.	SECT. NO.	JOB NO.	SHEET NO.
CHK DWG:	SAT	GUADALUPE				

Plotted on: 1/10/2020

Design Filename: ...\5103003_Klein_XSections.dgn

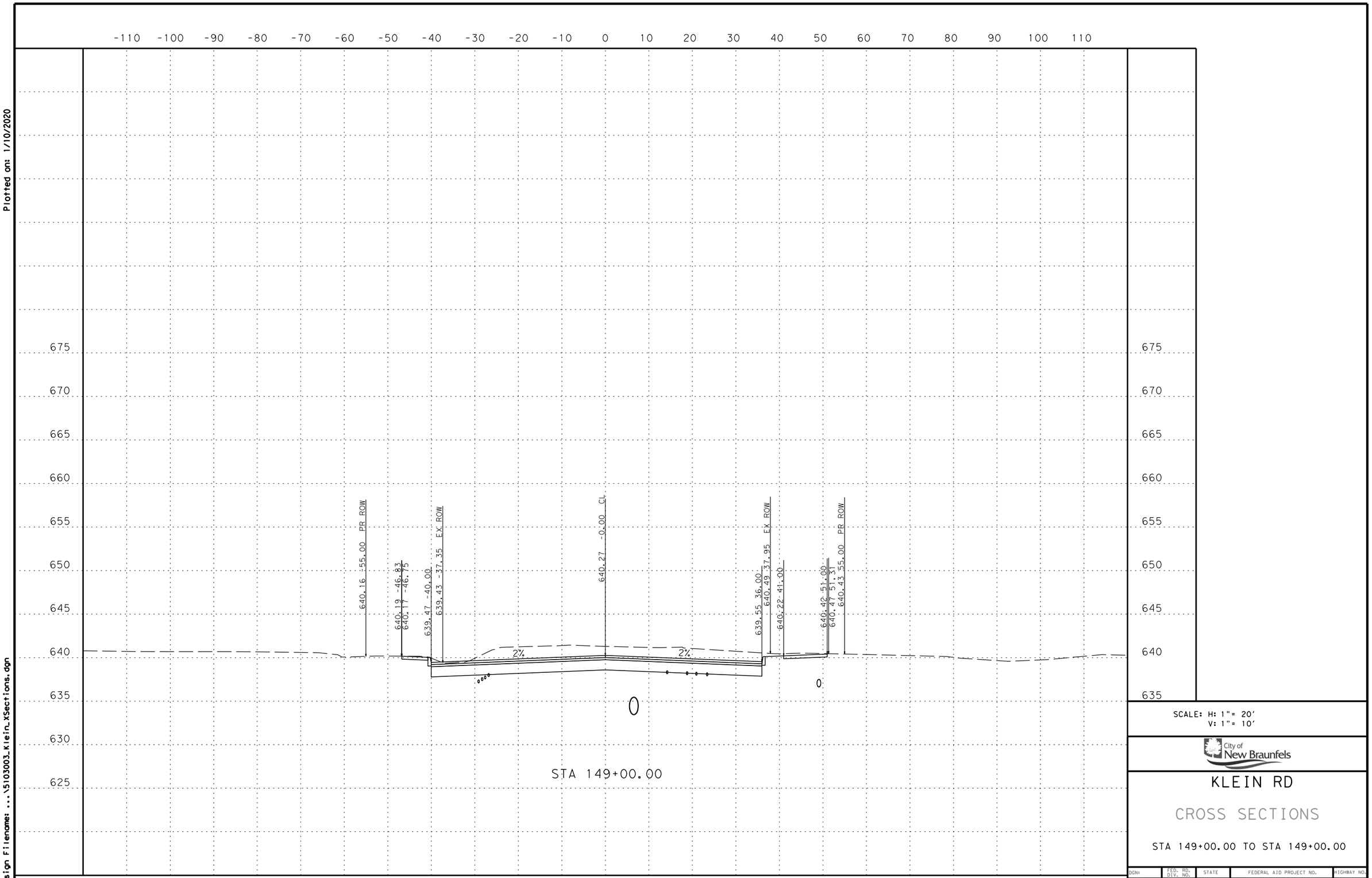

SCALE: H: 1"= 20'
V: 1"= 10'

City of New Braunfels

KLEIN RD

CROSS SECTIONS

STA 149+00.00 TO STA 149+00.00

DGN:	FED. RD. DIV. NO.	STATE	FEDERAL AID PROJECT NO.			HIGHWAY NO.
CHK DGN:	21	TEXAS				KLEIN RD
DWG:	DIST.	COUNTY	CONT. NO.	SECT. NO.	JOB NO.	SHEET NO.
CHK DWG:	SAT	GUADALUPE				

Plotted on: 1/10/2020

Design Filename: ...\5103003_Klein_XSections.dgn

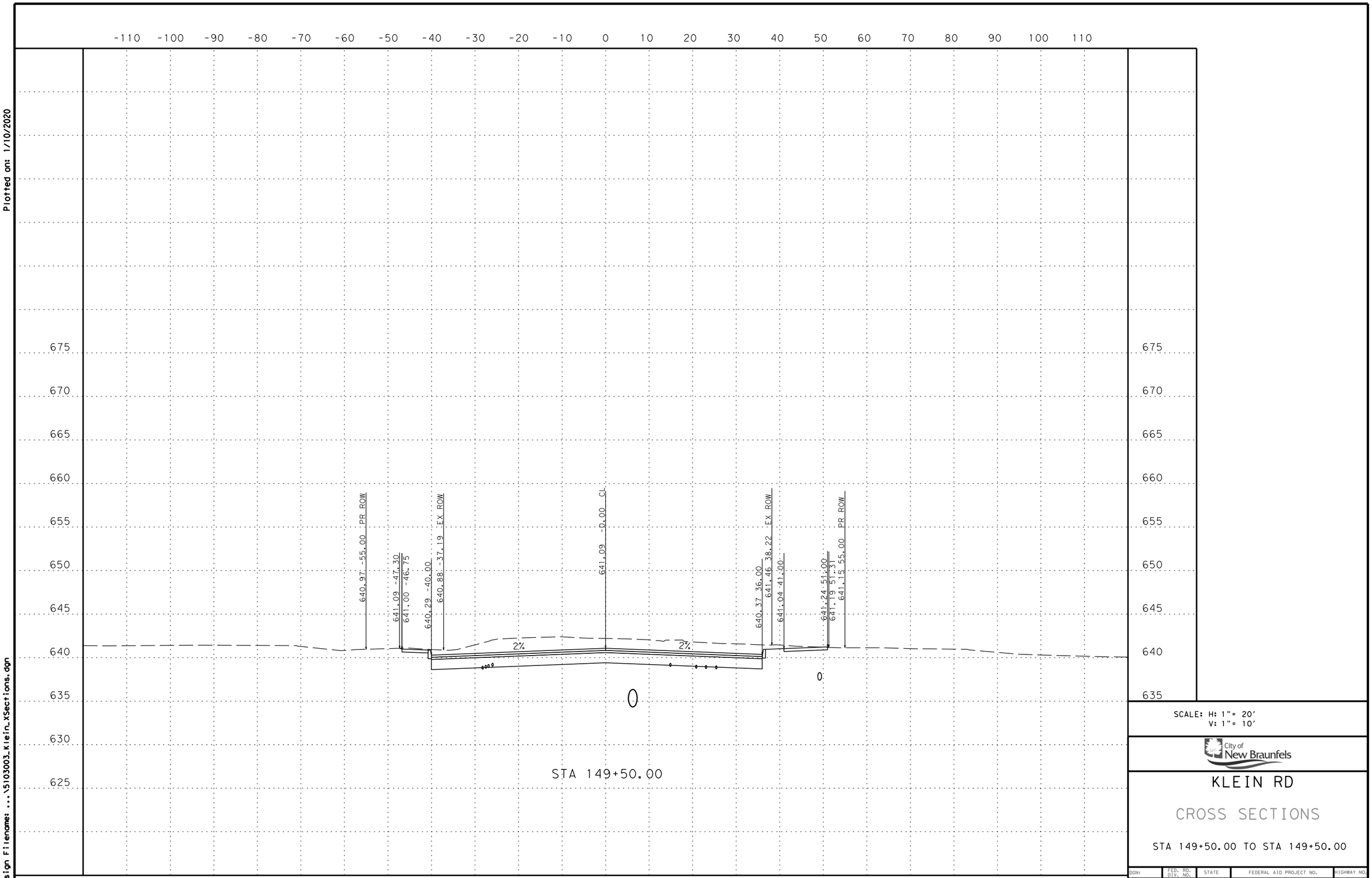

SCALE: H: 1"= 20'
V: 1"= 10'

City of New Braunfels

KLEIN RD

CROSS SECTIONS

STA 149+50.00 TO STA 149+50.00

DGN:	FED. RD. DIV. NO.	STATE	FEDERAL AID PROJECT NO.			HIGHWAY NO.
CHK DGN:	21	TEXAS				KLEIN RD
DWG:	DIST.	COUNTY	CONT. NO.	SECT. NO.	JOB NO.	SHEET NO.
CHK DWG:	SAT	GUADALUPE				

Plotted on: 1/10/2020

Design Filename: ...\5103003_Klein_XSections.dgn

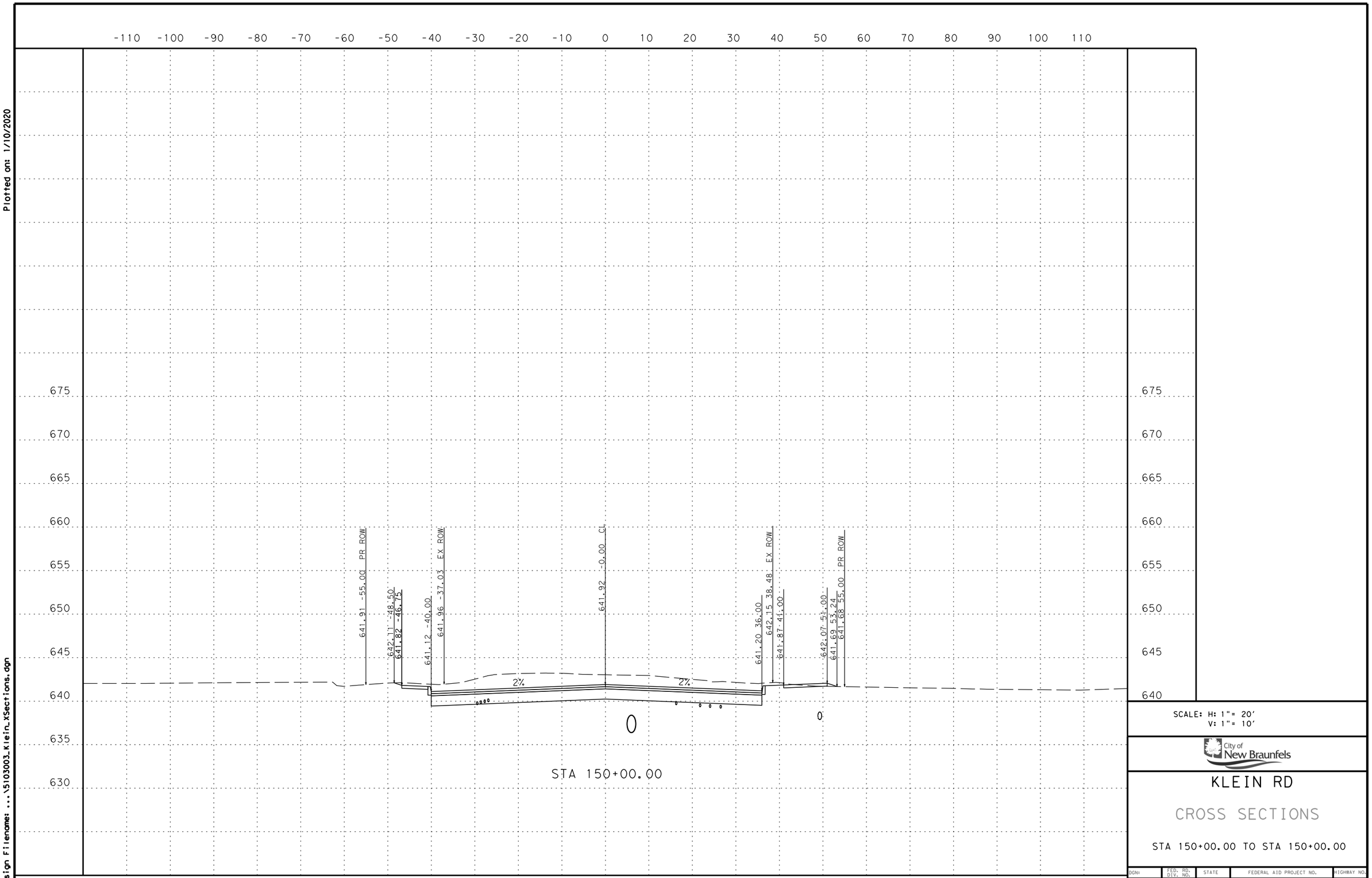

SCALE: H: 1" = 20'
V: 1" = 10'

City of New Braunfels

KLEIN RD

CROSS SECTIONS

STA 150+00.00 TO STA 150+00.00

DGN:	FED. RD. DIV. NO.	STATE	FEDERAL AID PROJECT NO.			HIGHWAY NO.
CHK DGN:	21	TEXAS				KLEIN RD
DWG:	DIST.	COUNTY	CONT. NO.	SECT. NO.	JOB NO.	SHEET NO.
CHK DWG:	SAT	GUADALUPE				

Plotted on: 1/10/2020

Design Filename: ...\5103003_Klein_XSections.dgn

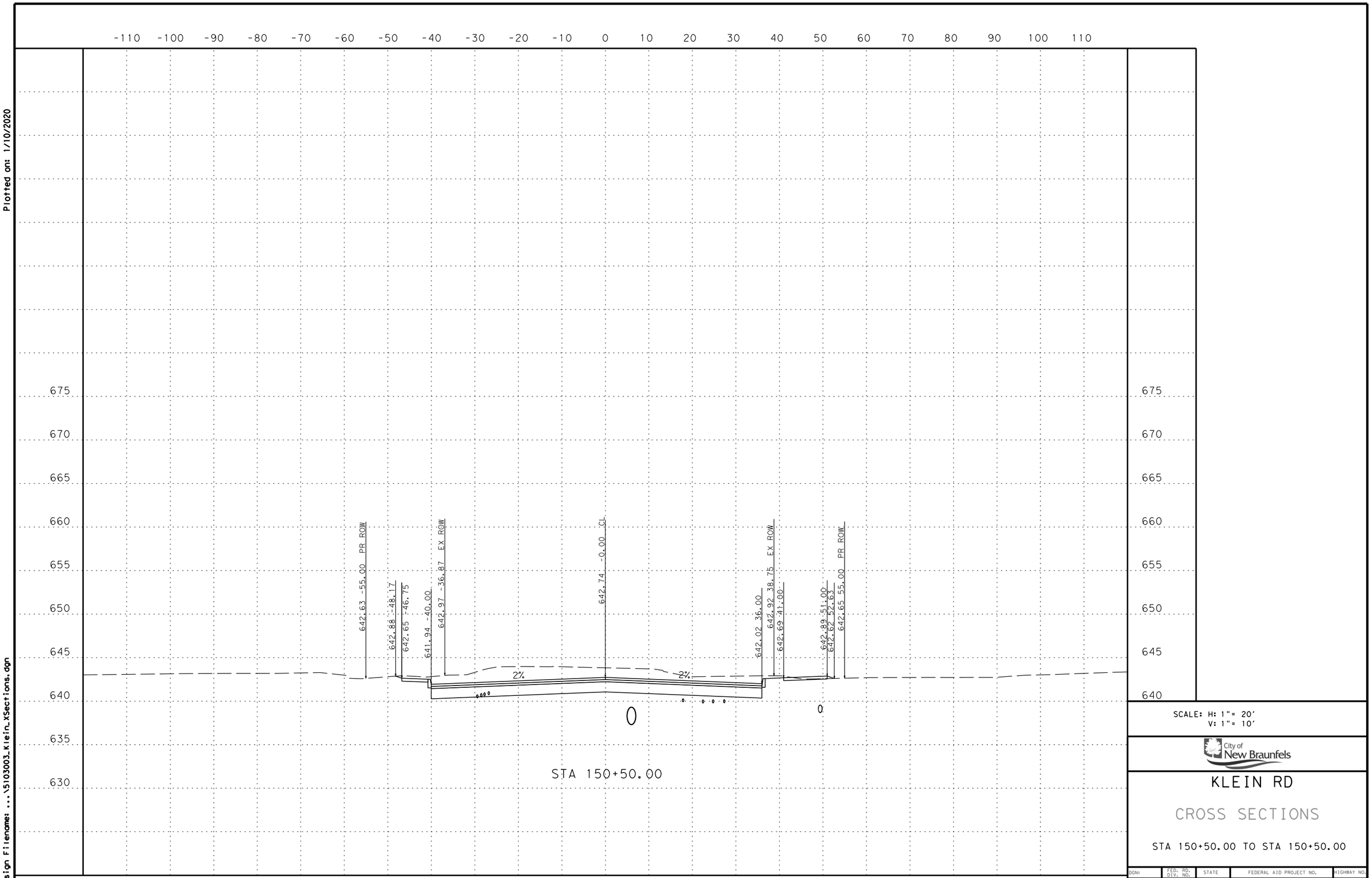

SCALE: H: 1"= 20'
V: 1"= 10'

City of New Braunfels

KLEIN RD

CROSS SECTIONS

STA 150+50.00 TO STA 150+50.00

DGN:	FED. RD. DIV. NO.	STATE	FEDERAL AID PROJECT NO.			HIGHWAY NO.
CHK DGN:	21	TEXAS				KLEIN RD
DWG:	DIST.	COUNTY	CONT. NO.	SECT. NO.	JOB NO.	SHEET NO.
CHK DWG:	SAT	GUADALUPE				

Plotted on: 1/10/2020

Design Filename: ...\5103003_Klein_XSections.dgn

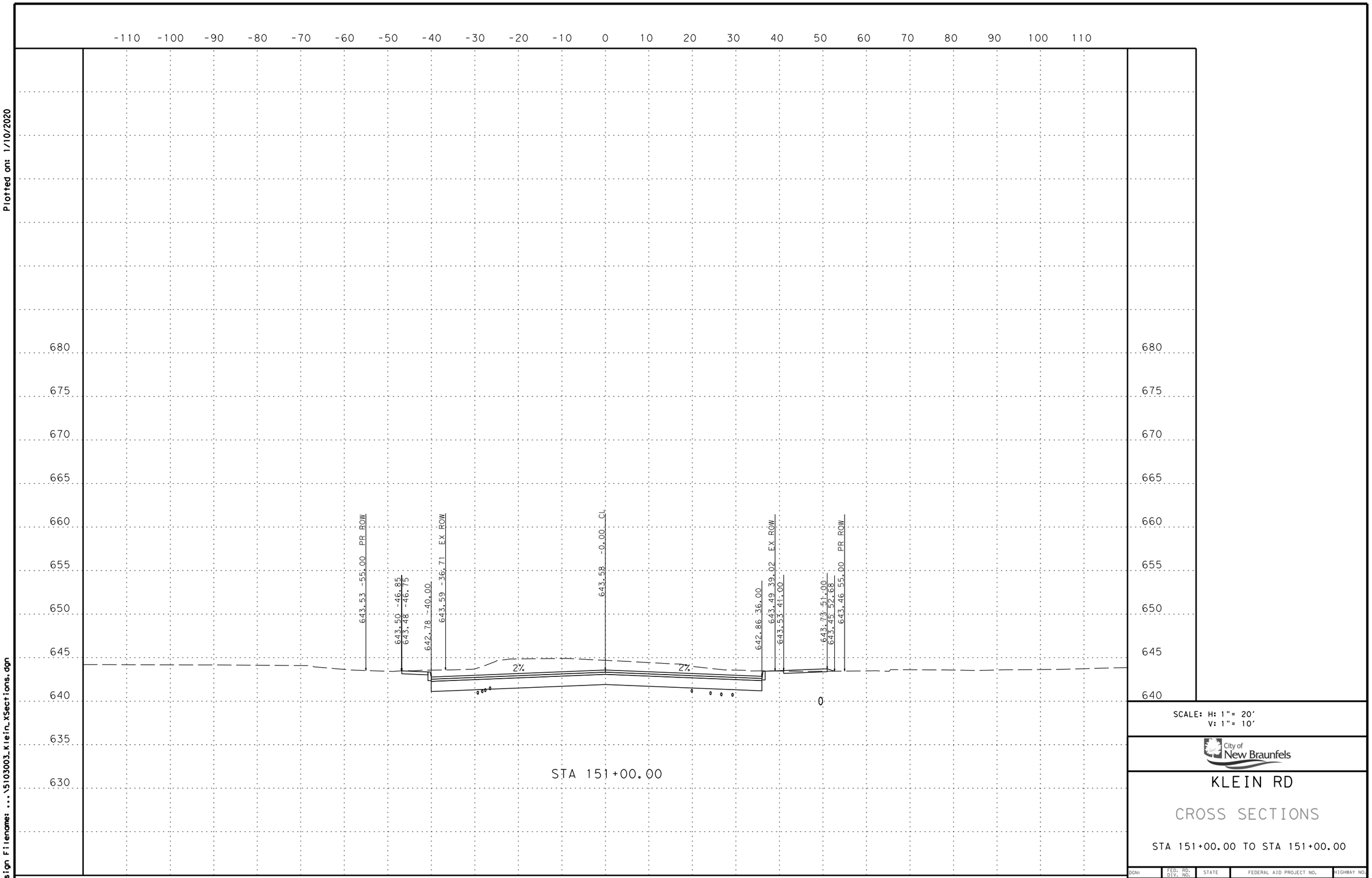

SCALE: H: 1" = 20'
V: 1" = 10'

City of New Braunfels

KLEIN RD

CROSS SECTIONS

STA 151+00.00 TO STA 151+00.00

DGN:	FED. RD. DIV. NO.	STATE	FEDERAL AID PROJECT NO.			HIGHWAY NO.
CHK DGN:	21	TEXAS				KLEIN RD
DWG:	DIST.	COUNTY	CONT. NO.	SECT. NO.	JOB NO.	SHEET NO.
CHK DWG:	SAT	GUADALUPE				

Plotted on: 1/10/2020

Design Filename: ...\5103003_Klein_XSections.dgn

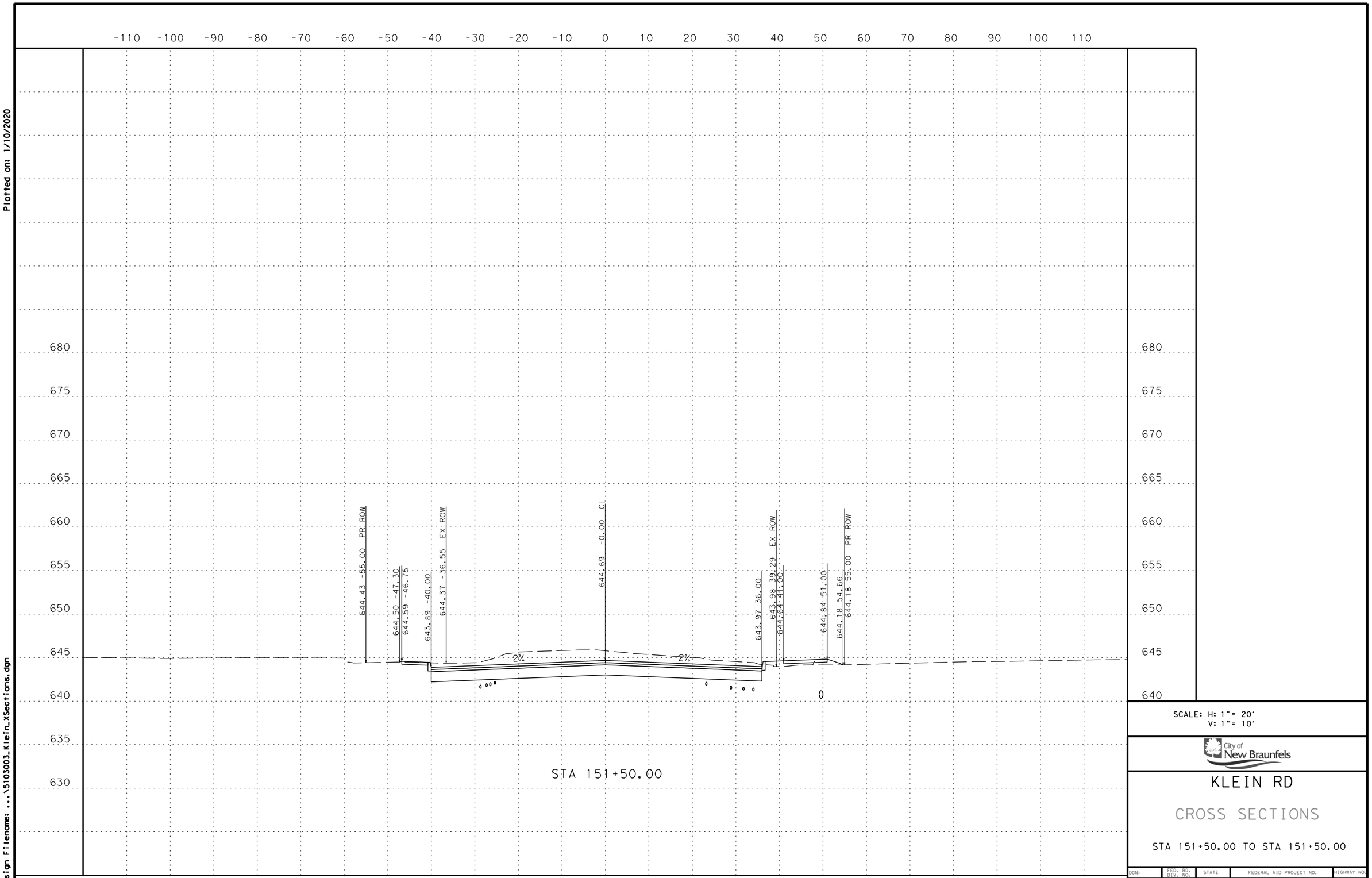

SCALE: H: 1" = 20'
V: 1" = 10'

City of New Braunfels

KLEIN RD

CROSS SECTIONS

STA 151+50.00 TO STA 151+50.00

DGN:	FED. RD. DIV. NO.	STATE	FEDERAL AID PROJECT NO.			HIGHWAY NO.
CHK DGN:	21	TEXAS				KLEIN RD
DWG:	DIST.	COUNTY	CONT. NO.	SECT. NO.	JOB NO.	SHEET NO.
CHK DWG:	SAT	GUADALUPE				

Plotted on: 1/10/2020

Design Filename: ...\5103003_Klein_XSections.dgn

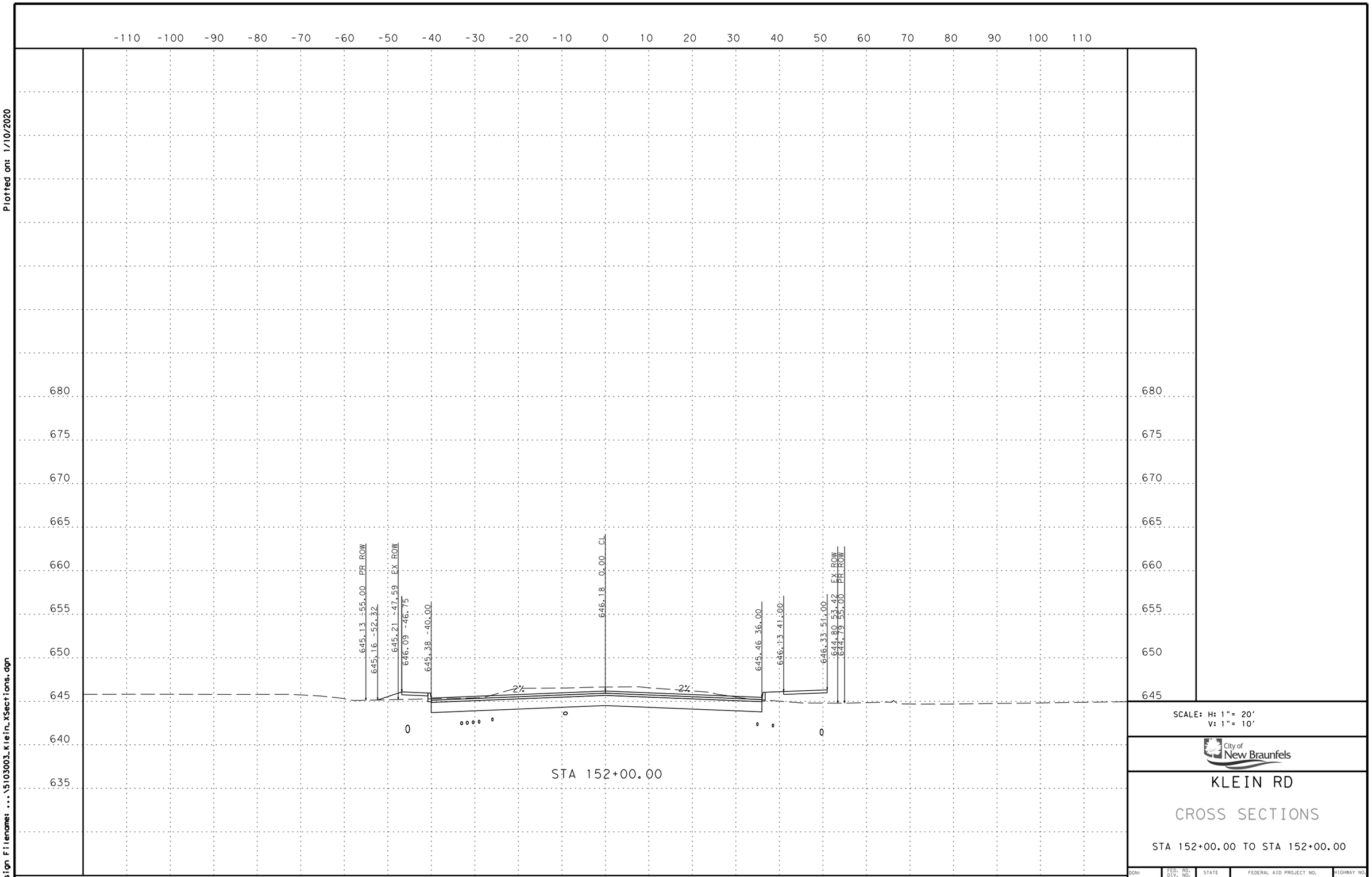

SCALE: H: 1"= 20'
V: 1"= 10'

City of New Braunfels

KLEIN RD

CROSS SECTIONS

STA 152+00.00 TO STA 152+00.00

DGN:	FED. RD. DIV. NO.	STATE	FEDERAL AID PROJECT NO.			HIGHWAY NO.
CHK DGN:	21	TEXAS				KLEIN RD
DWG:	DIST.	COUNTY	CONT. NO.	SECT. NO.	JOB NO.	SHEET NO.
CHK DWG:	SAT	GUADALUPE				

Plotted on: 1/10/2020

Design Filename: ...\5103003_Klein_XSections.dgn

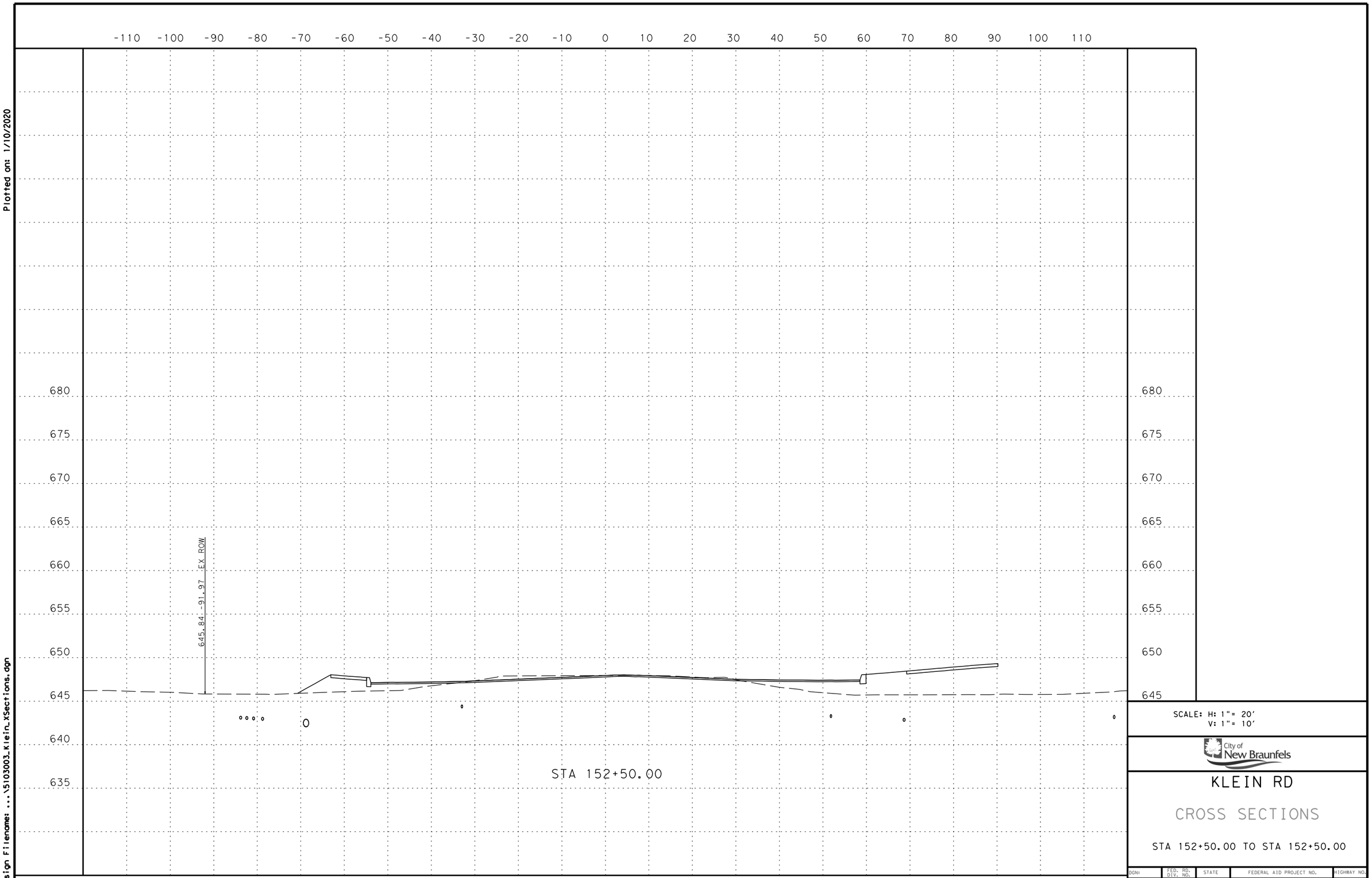

SCALE: H: 1" = 20'
V: 1" = 10'

City of New Braunfels

KLEIN RD

CROSS SECTIONS

STA 152+50.00 TO STA 152+50.00

DGN:	FED. RD. DIV. NO.	STATE	FEDERAL AID PROJECT NO.			HIGHWAY NO.
CHK DGN:	21	TEXAS				KLEIN RD
DWG:	DIST.	COUNTY	CONT. NO.	SECT. NO.	JOB NO.	SHEET NO.
CHK DWG:	SAT	GUADALUPE				